WGD100N03V

Features:

- ☐ Low Intrinsic Capacitances.
- ☐ Excellent Switching Characteristics.
- ☐ Extended Safe Operating Area.
- ☐ Unrivalled Gate Charge :Qg= 40 nC (Typ.).
- ☐ BVDSS=30V,I_D= 100A
- ☐ R_{DS}(on) : 3.3mΩ (Typ) @V_G=10V
- ☐ 100% Avalanche Tested

TO-252S

RoHS COMPLIANT

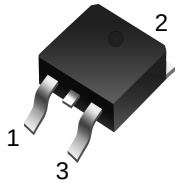

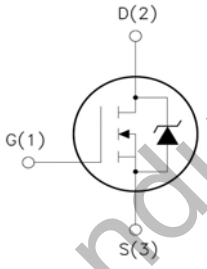

1.Gate (G)
2.Drain (D)
3.Source (S)

WildGoose Semiconductor

Absolute Maximum Ratings (T_A=25°C unless otherwise noted)

Parameter	Symbol	Limit	Unit
Drain-Source Voltage	V_{DS}	30	V
Gate-Source Voltage	V_{GS}	±20	V
Drain Current-Continuous	I_D	100	A
Drain Current-Continuous(T_C=100℃)	I_D (100℃)	59	A
Pulsed Drain Current	I_{DM}	360	A
Maximum Power Dissipation	P_D	68	W
Single pulse avalanche energy (Note 5)	E_{AS}	210	mJ
Operating Junction and Storage Temperature Range	T_J,T_{STG}	-55 To 175	℃

Thermal Characteristics

Thermal Resistance,Junction-to-Case (Note 2)	$R_{\theta JC}$	2.2	℃/W

Electrical Characteristics (TA=25°C unless otherwise noted)

Symbol	Parameter	Test Condition	Min.	Typ.	Max.	Units
Off Characteristic						
$V_{(BR)DSS}$	Drain-Source Breakdown Voltage	V_{GS}=0V, I_D=250μA	30	-	-	V
I_{DSS}	Zero Gate Voltage Drain Current	V_{DS} =30V, V_{GS} = 0V,	-	-	1.0	μA
I_{GSS}	Gate to Body Leakage Current	V_{DS} =0V, V_{GS} = ±20V	-	-	±100	nA
On Characteristics						
$V_{GS(th)}$	Gate Threshold Voltage	V_{DS}= V_{GS}, I_D=250μA	1.2	1.4	2.4	V
$R_{DS(on)}$	Static Drain-Source on-Resistance note3	V_{GS} =10V, I_D =30A	-	3.3	4.5	mΩ
		V_{GS} =4.5V, I_D =20A	-	4.6	7.5	
Dynamic Characteristics						
C_{iss}	Input Capacitance	V_{DS} =15V, V_{GS} =0V, f = 1.0MHz	-	2100	-	pF
C_{oss}	Output Capacitance		-	326	-	pF
C_{rss}	Reverse Transfer Capacitance		-	282	-	pF
Q_g	Total Gate Charge	V_{DS} =15V, I_D =30A, V_{GS} =10V	-	45	-	nC
Q_{gs}	Gate-Source Charge		-	3	-	nC
Q_{gd}	Gate-Drain("Miller") Charge		-	15	-	nC
Switching Characteristics						
$t_{d(on)}$	Turn-on Delay Time	V_{DS}=15V, I_D=30A, R_{GEN}=3Ω, V_{GS} =10V	-	21	-	ns
t_r	Turn-on Rise Time		-	32	-	ns
$t_{d(off)}$	Turn-off Delay Time		-	59	-	ns
t_f	Turn-off Fall Time		-	34	-	ns
Drain-Source Diode Characteristics and Maximum Ratings						
I_S	Maximum Continuous Drain to Source Diode Forward Current		-	-	100	A
I_{SM}	Maximum Pulsed Drain to Source Diode Forward Current		-	-	400	A
V_{SD}	Drain to Source Diode Forward Voltage	V_{GS} = 0V, I_S=30A	-	-	1.2	V
trr	Body Diode Reverse Recovery Time	I_F=20A,dI/dt=100A/μs	-	15	-	ns
Qrr	Body Diode Reverse Recovery Charge		-	4	-	nC

Notes:1. Repetitive Rating: Pulse Width Limited by Maximum Junction Temperature

2. EAS condition: T_J=25℃, V_{DD}=15V, V_G=10V, R_G=25Ω, L=0.5mH, I_{AS}=30A

3. Pulse Test: Pulse Width≤300μs, Duty Cycle≤0.5%

WinGoose Semiconductor

Typical Characteristics

Figure1: Output Characteristics

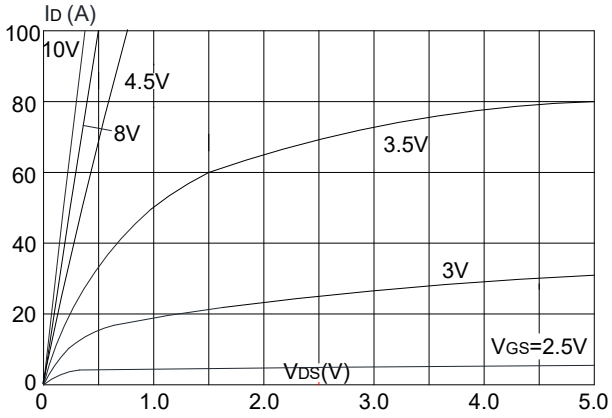

Figure 2: Typical Transfer Characteristics

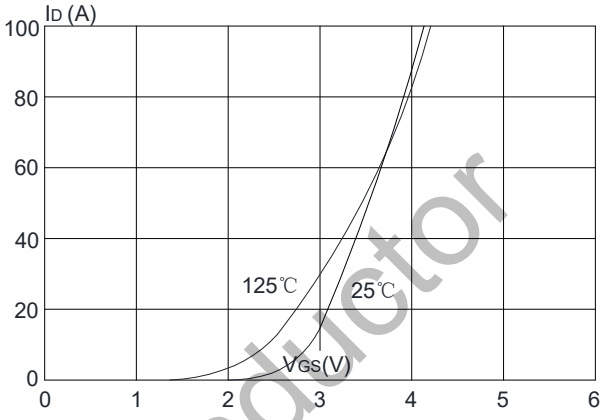

Figure 3: On-resistance vs. Drain Current

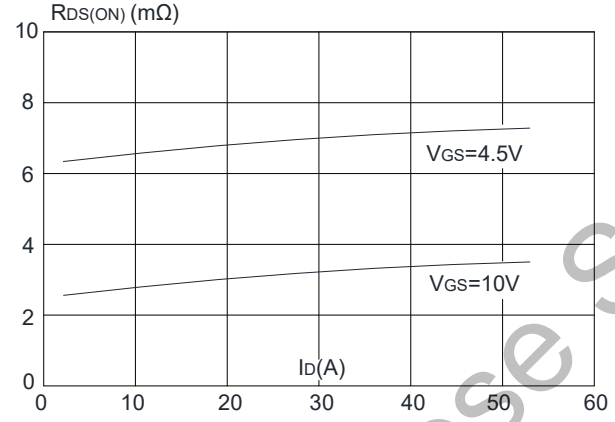

Figure 4: Body Diode Characteristics

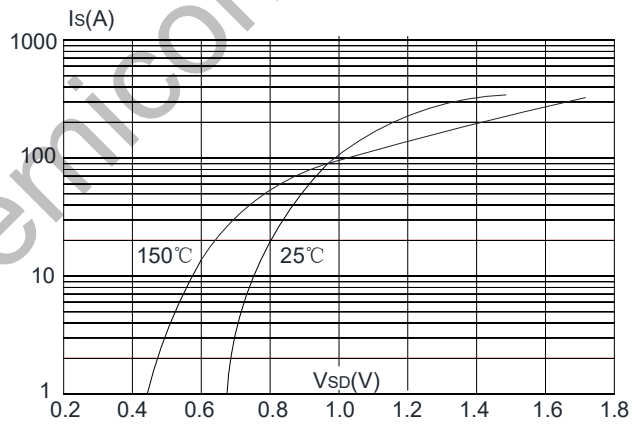

Figure 5: Gate Charge Characteristics

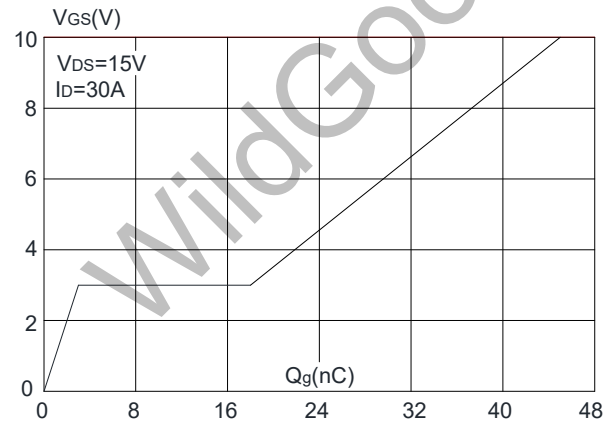

Figure 6: Capacitance Characteristics

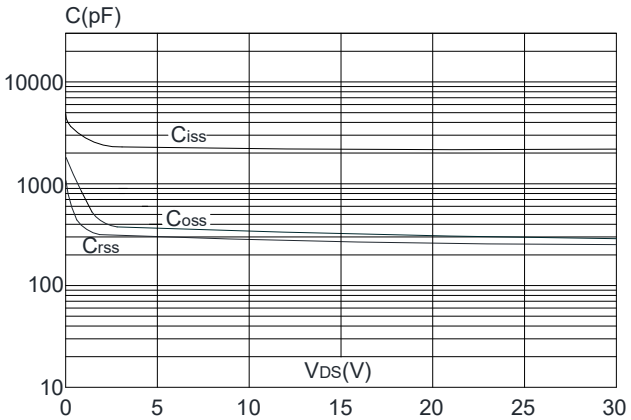

WildGoose Semiconductor

Figure 7: Normalized Breakdown Voltage vs. Junction Temperature

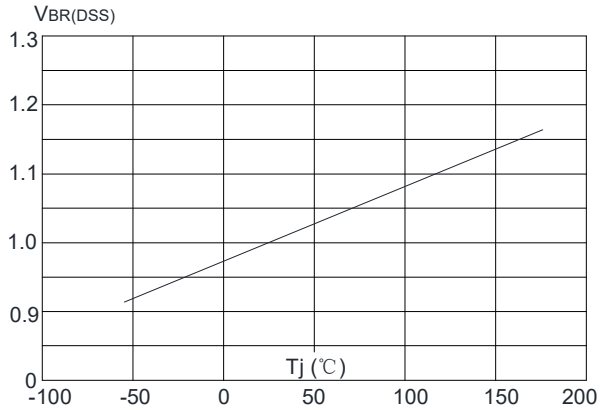

Figure 8: Normalized on Resistance vs. Junction Temperature

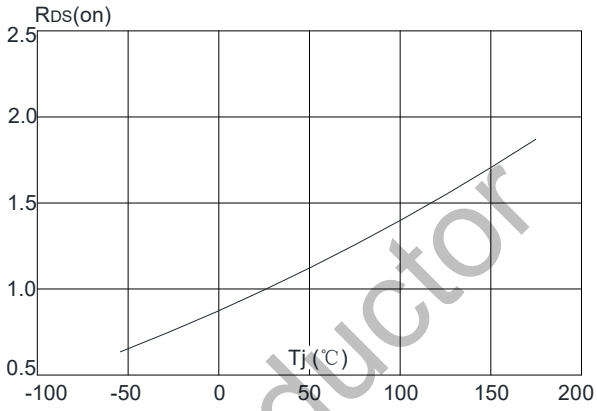

Figure 9: Maximum Safe Operating Area

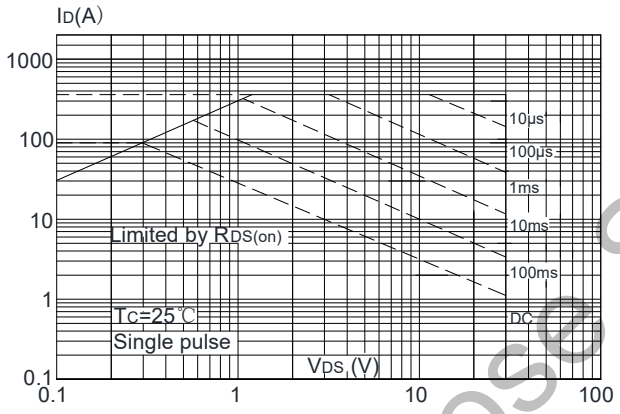

Figure 10: Maximum Continuous Drain Current vs. Case Temperature

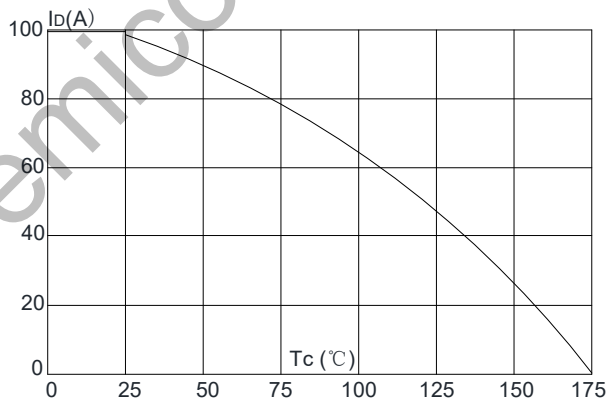

Maximum Effective Transient Thermal Impedance, Junction-to-Case

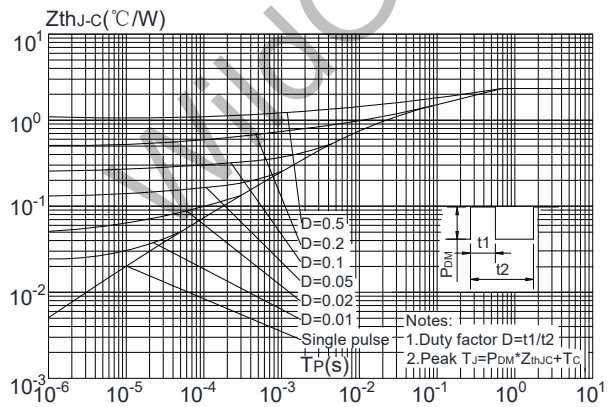

WUXI GOOSE Semiconductor

Test Circuit

1) E_{AS} Test Circuits

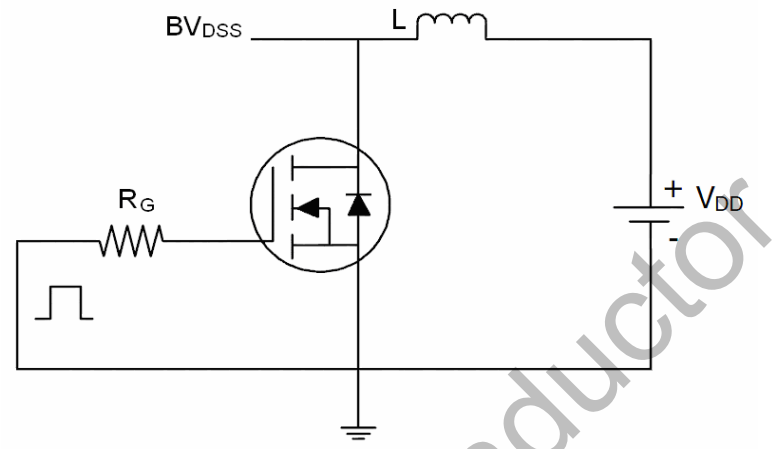

2) Gate Charge Test Circuit:

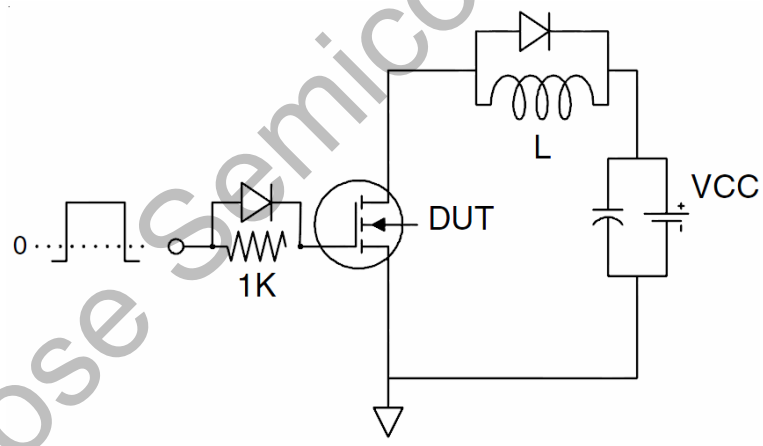

3) Switch Time Test Circuit:

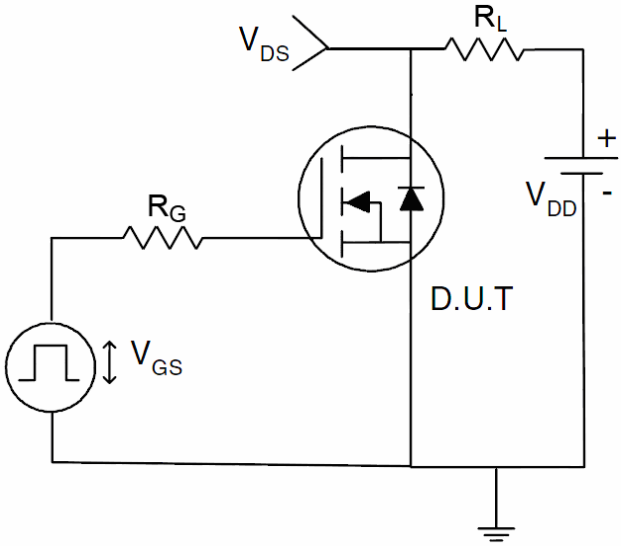

WildGoose Semiconductor

Package Dimension

TO-252S

Unit: mm

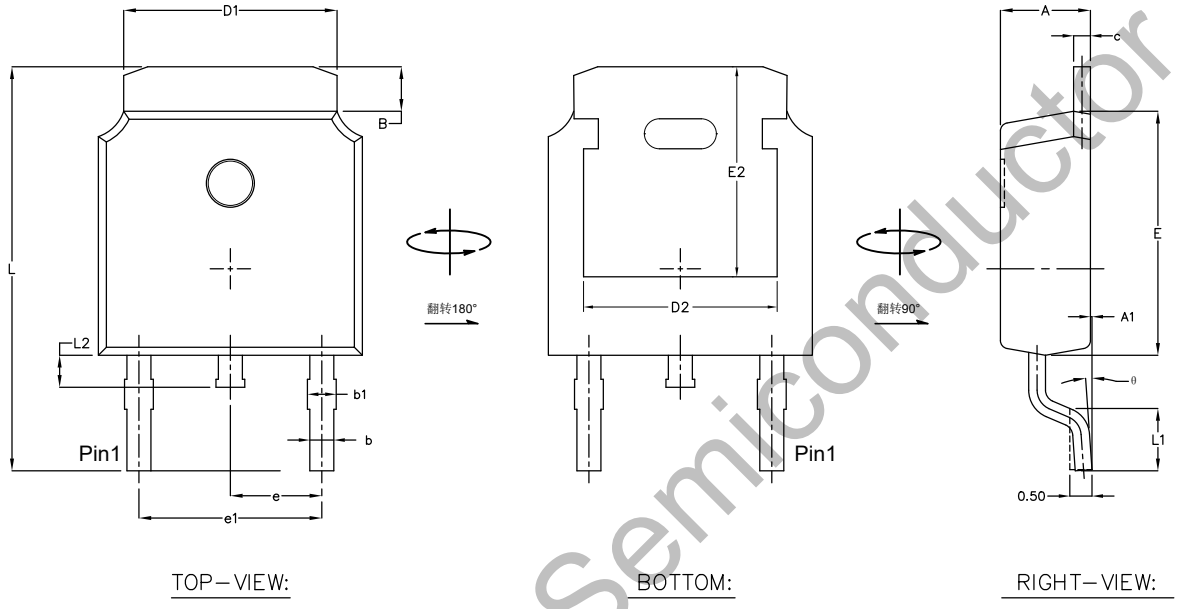

TOP—VIEW: BOTTOM: RIGHT—VIEW:

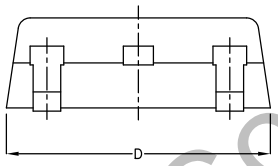

FRONT—VIEW:

SYMBOL	MILLIMETER		
	MIN	NOM	MAX
A	2.20	2.25	2.30
A1	0.03	0.08	0.13
B	0.85	1.00	1.15
b	0.59	0.69	0.79
b1	0.74	0.84	0.94
c	0.48	0.50	0.52
D	6.55	6.60	6.65
D1	5.23	5.33	5.43
D2	4.74	4.84	4.94
E	6.05	6.10	6.15
E2	5.15	5.25	5.35
e	2.286TYP.		
e1	4.47	4.57	4.67
L	9.77	9.97	10.17
L1	1.40	1.50	1.60
L2	0.70	0.80	0.90
θ	0°	3°	6°

WildGoose Semiconductor