WGG01N20LE-3L

Features:

- ☐ Advanced Trench Technology.
- ☐ Excellent Switching Characteristics.
- ☐ Extended Safe Operating Area.
- ☐ Unrivalled Gate Charge :Qg= 12 nC (Typ.).
- ☐ BVDSS= 200V,I_D= 1.7A
- ☐ $R_{DS(on)}$: 0.63Ω (Max) @V_G=4.5V
- ☐ 100% Avalanche Tested

SOT-23-3L

RoHS COMPLIANT

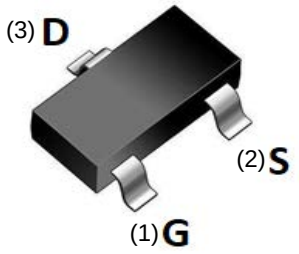



Schematic diagram

1:Gate (G)
2:Source (S)
3:Drain (D)

Absolute Maximum Ratings

Parameter	Symbol	Rating	Unit
Drain-Source Voltage	V_{DS}	200	V
Gate-Source Voltage	V_{GS}	±30	V
Continuous Drain Current, V_{GS} @ 10V [1] (T_A=25℃)	I_D	1.7	A
Continuous Drain Current, V_{GS} @ 10V [1] (T_A=70℃)		0.8	
Pulsed Drain Current [2]	I_{DM}	6	A
Total Power Dissipation [3] (T_A=25℃)	P_D	1.0	W
Total Power Dissipation [3] (T_A=70℃)		0.64	
Operating Junction and Storage Temperature Range	T_J,T_{STG}	-55 To 150	℃

Thermal Characteristic

Parameter	Symbol	Value	Unit
Thermal Resistance Junction-Ambient [1]	$R_{\theta JA}$	125	℃/W
Thermal Resistance Junction-Case [1]	$R_{\theta JC}$	80	℃/W

WildGoose Semiconductor

Electrical Characteristics (T_J=25℃ unless otherwise noted)

Static Characteristics						
Symbol	**Parameter**	**Conditions**	**Min**	**Typ**	**Max**	**Unit**
BV_{DSS}	Drain-Source Breakdown Voltage	V_{GS} = 0 V , I_D = 250 μA	200			V
$R_{DS(ON)}$	Drain-Source On-State Resistance [2]	V_{GS} = 10 V , I_D = 1.7 A		0.48	0.60	Ω
		V_{GS} = 4.5 V , I_D = 1.7 A		0.49	0.63	
$V_{GS(th)}$	Gate Threshold Voltage	V_{GS} = V_{DS} , I_D = 250 μA	1.0	1.7	2.5	V
I_{DSS}	Drain-Source Leakage Current (T_J=25℃)	V_{DS} = 200 V , V_{GS} = 0V			1	μA
	Drain-Source Leakage Current (T_J=55℃)	V_{DS} = 200 V , V_{GS} = 0V			5	
I_{GSS}	Gate-Body Leakage Current	V_{GS} = ±20 V , V_{DS} = 0V			±100	nA
gfs	Forward Transconductance	V_{DS} = 15 V , I_D = 1 A		8		S

Dynamic Characteristics						
Symbol	**Parameter**	**Conditions**	**Min**	**Typ**	**Max**	**Unit**
C_{iss}	Input Capacitance	V_{DS} = 25V V_{GS} = 0 V f=1.0MHz		145		pF
C_{oss}	Output Capacitance			88		pF
C_{rss}	Reverse Transfer Capacitance			3		pF
Switching Times						
Symbol	**Parameter**	**Conditions**	**Min**	**Typ**	**Max**	**Unit**
$t_{d(on)}$	Turn-On Delay Time	V_{DD} = 100 V V_{GS} = 10 V R_G = 2.5 Ω I_D = 1 A		9		nS
t_r	Turn-On Rise Time			11		nS
$t_{d(off)}$	Turn-Off Delay Time			14		nS
t_f	Turn-Off Fall Time			12		nS
Q_g	Total Gate Charge (10 V)	V_{DS} = 100 V V_{GS} = 10 V I_D = 1 A		12		nC
Q_{gs}	Gate-Source Charge			2.3		nC
Q_{gd}	Gate-Drain Charge			3.8		nC

Source-Drain Diode Characteristics

Symbol	Parameter	Conditions	Min	Typ	Max	Unit
I_S	Continuous Source Current [1,4]	V_G=V_D=0V, Force Current			1.7	A
V_{SD}	Diode Forward Voltage [2]	I_S = 1 A , V_{GS}=0V, T_J=25℃			1.2	V
t_{rr}	Reverse Recovery Time	I_F = 1 A , dI/dt = 100A/μs, T_J=25℃		38		nS
Q_{rr}	Reverse Recovery Charge			20		nC

Notes:

1.The data tested by surface mounted on a 1 inch^2 FR-4 board with 2OZ copper.

2.The data tested by pulsed : Pulse Width ≤ 300μs , Duty Cycle ≤ 2%.

3.The power dissipation is limited by 150℃ junction temperature.

4.The data is theoretically the same as I_D and I_{DM} , in real applications , should be limited by total power dissipation.

WidGoose Semiconductor

Typical Performance Characteristics

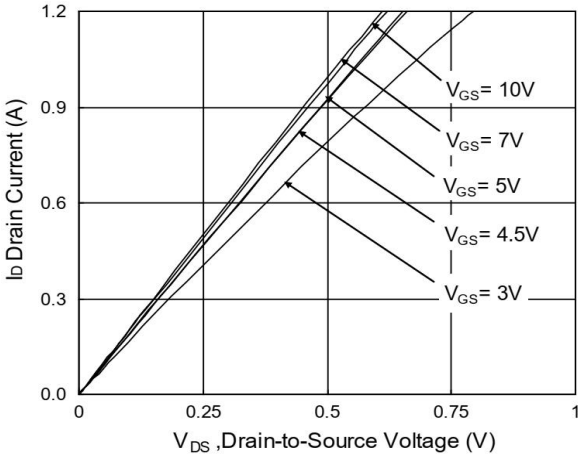

Fig.1 Typical Output Characteristics

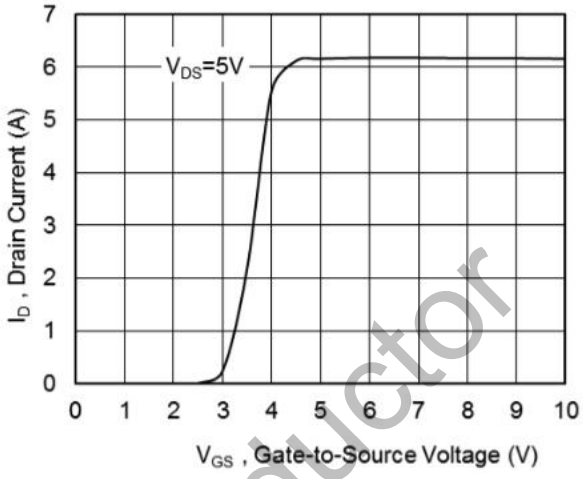

Fig.2 Transfer Characteristics

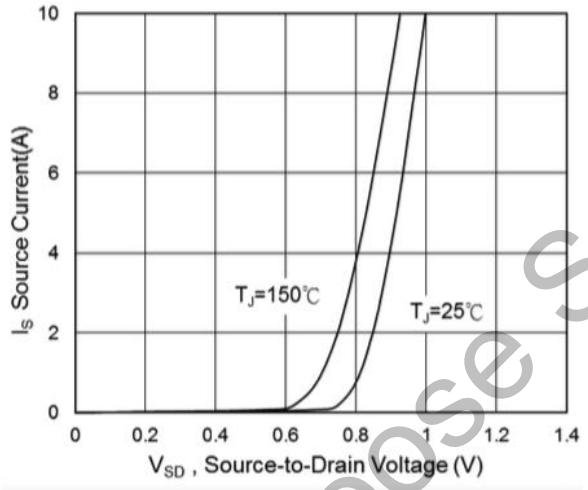

Fig.3 Forward Characteristics Of Reverse

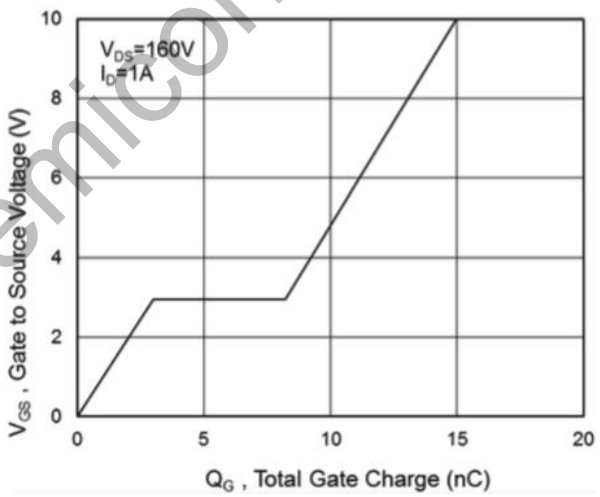

Fig.4 Gate-Charge Characteristics

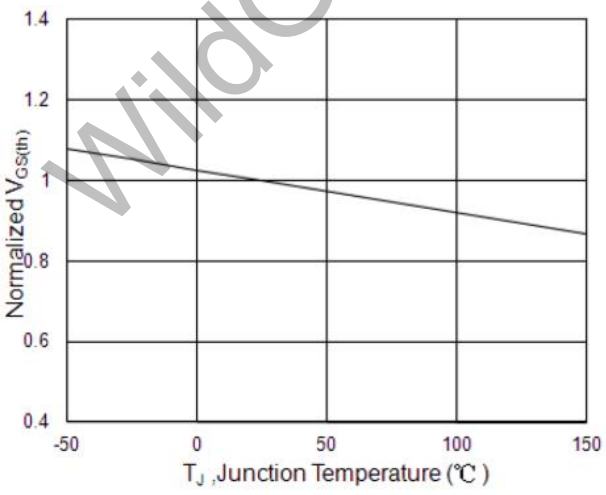

Fig.5 Normalized $V_{GS(th)}$ vs. T_J

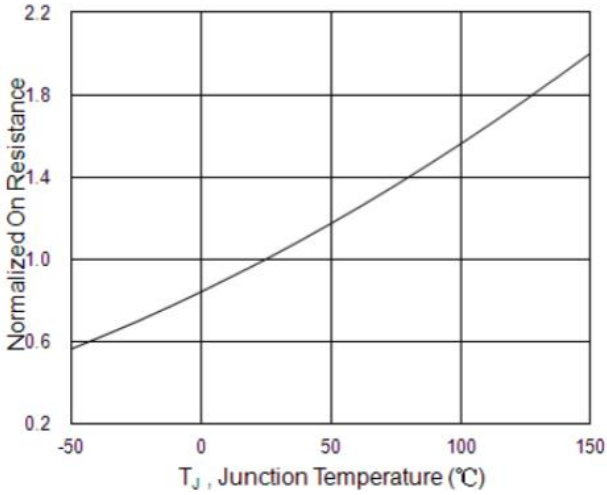

Fig.6 Normalized R_{DSON} vs. T_J

WildGoose Semiconductor

Typical Performance Characteristics

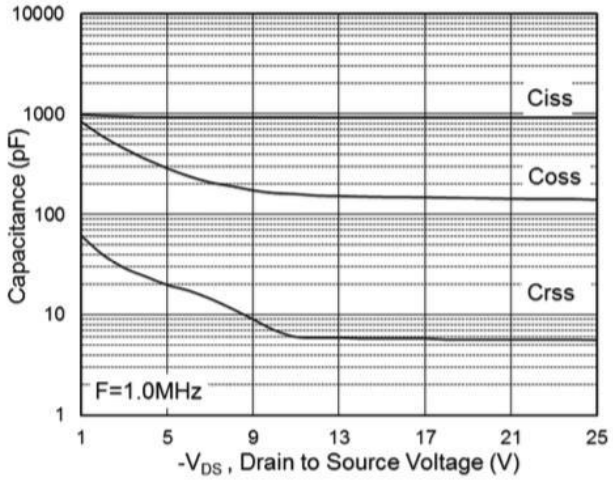

Fig.7 Capacitance

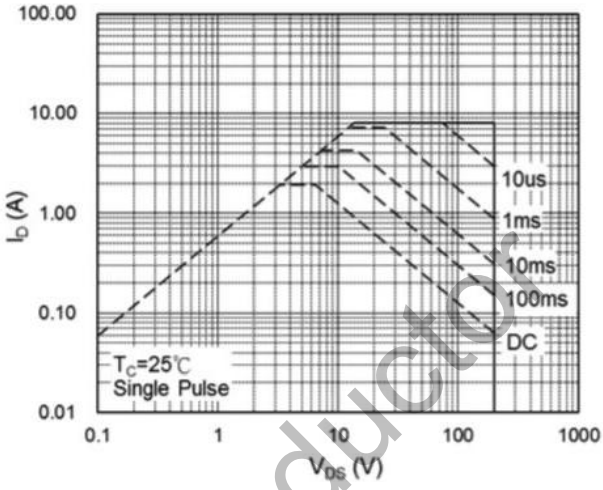

Fig.8 Safe Operating Area

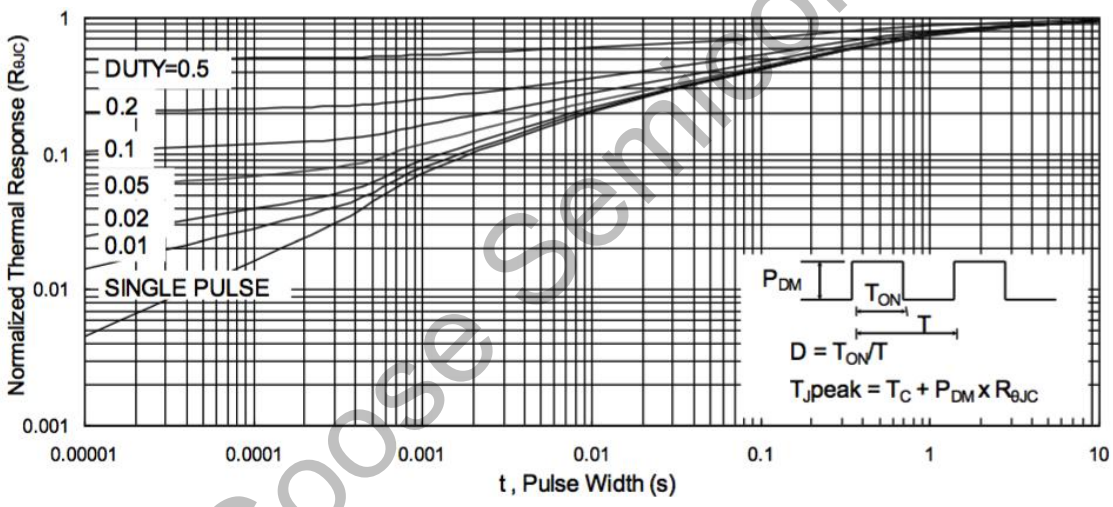

Fig.9 Normalized Maximum Transient Thermal Impedance

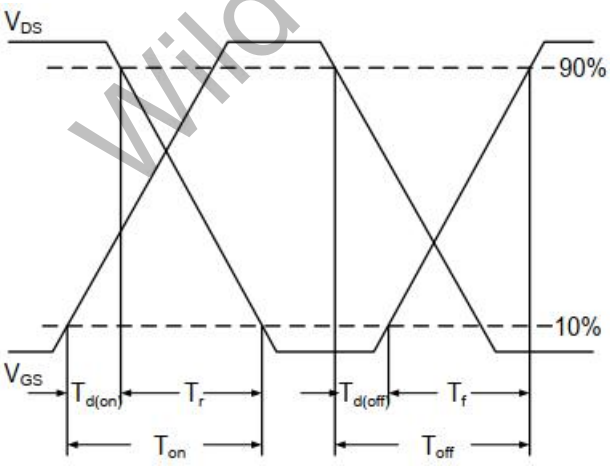

Fig.10 Switching Time Waveform

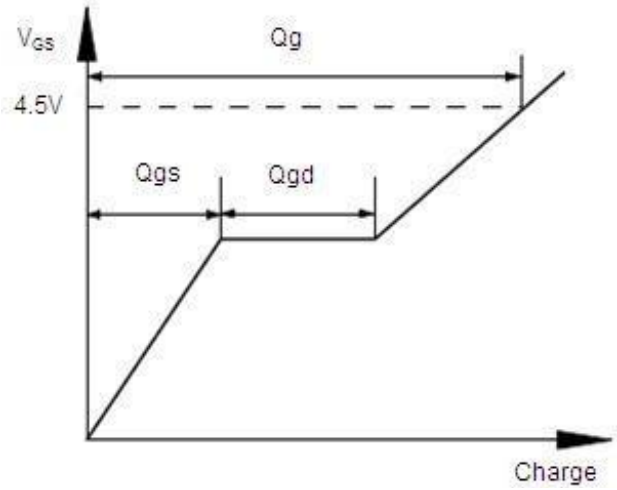

Fig.11 Gate Charge Waveform

WildGoose Semiconductor

Test Circuit

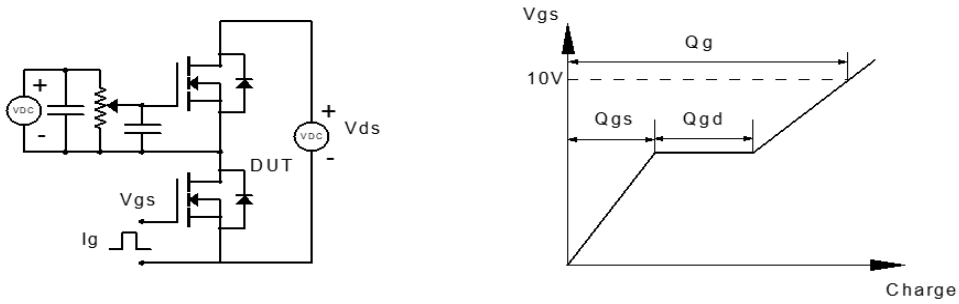

Figure 1: Gate Charge Test Circuit & Waveform

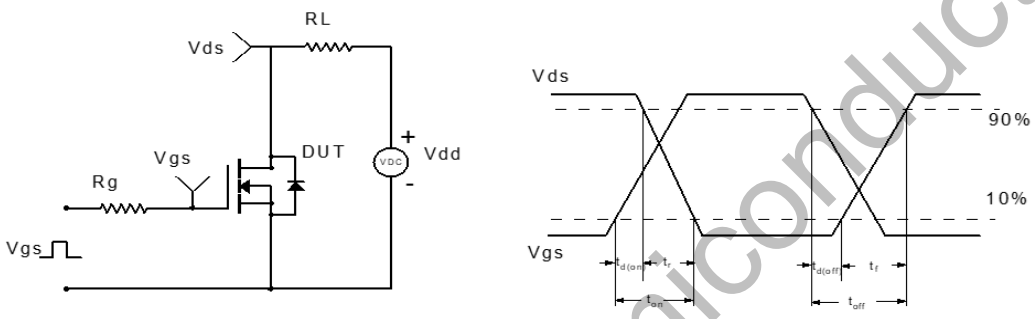

Figure 2: Resistive Switching Test Circuit & Waveform

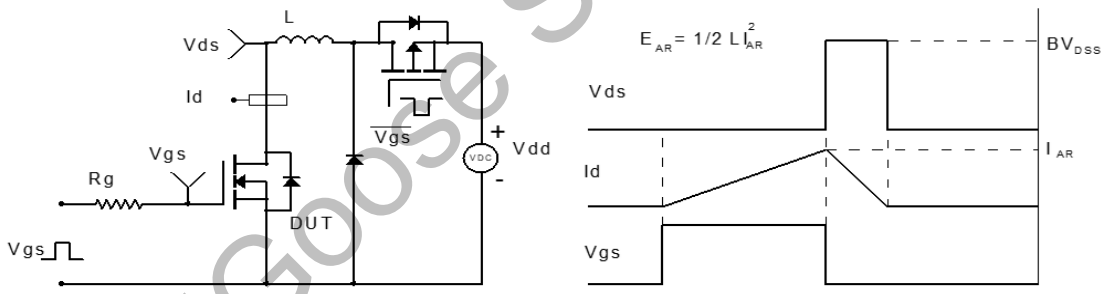

Figure 3: Unclamped Inductive Switching Test Circuit& Waveform

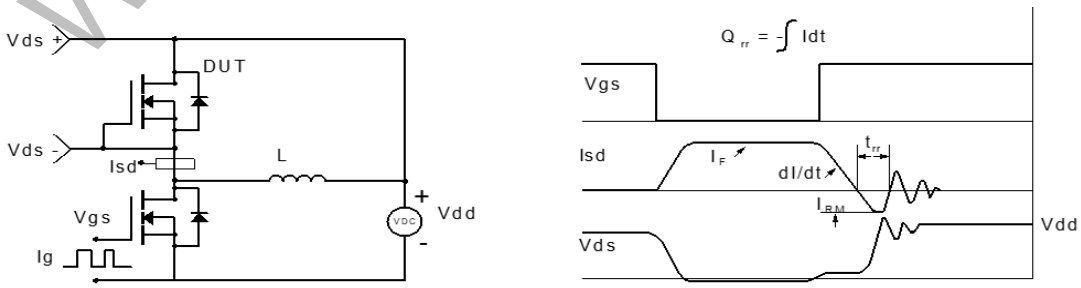

Figure 4: Diode Recovery Test Circuit & Waveform

WildGoose Semiconductor

Package Dimension

SOT-23-3L

Unit: mm

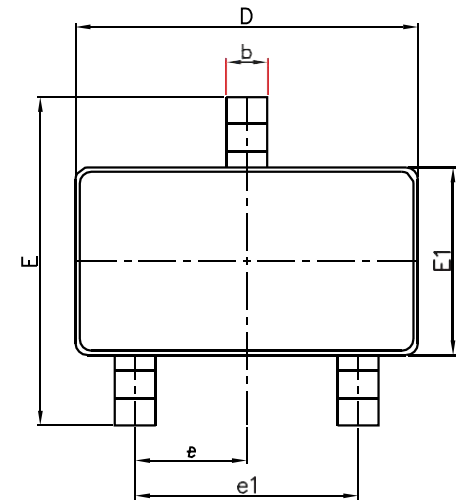

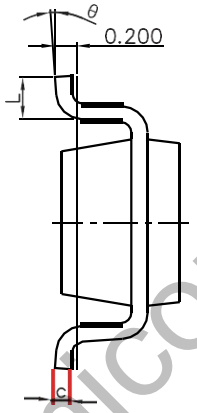

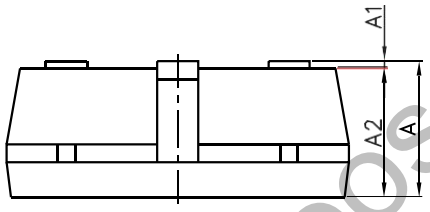

Symbol	Dimensions In Millimeters		Dimensions In Inches	
	Min.	Max.	Min.	Max.
A	1.050	1.250	0.041	0.049
A1	0.000	0.100	0.000	0.004
A2	1.050	1.150	0.041	0.045
b	0.300	0.500	0.012	0.020
c	0.100	0.200	0.004	0.008
D	2.820	3.020	0.111	0.119
E1	1.500	1.700	0.059	0.067
E	2.650	2.950	0.104	0.116
e	0.950(BSC)		0.037(BSC)	
e1	1.800	2.000	0.071	0.079
L	0.300	0.600	0.012	0.024
0	0°	8°	0°	8°

SOT-23-3L Suggested Pad Layout

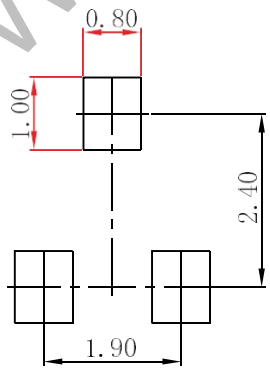

Note:
1.Controlling dimension:in millimeters.
2.General tolerance:± 0.05mm.
3.The pad layout is for reference purposes only.

WldGoose Semiconductor