Shaoxing Yuli Semiconductor CO.,LTD

绍 兴 宇 力 半 导 体 有 限 公 司

U3504DA Data Sheet

V 1.1

版权归绍兴宇力半导体有限公司

150V Input, Switching Current Limit Step-Down Converter

■ General Description

The U3504DA is a high voltage, step-down, switching regulator built-in MOSFET. It integrates a high-side, high-voltage, power MOSFET with a current limit of 7A(IPK) typically. The input ranges accommodates a variety of step-down applications, making it ideal for automotive, industry, and lighting applications. Hysteretic voltage-mode control is employed for very fast response. UNIU's proprietary feedback control scheme minimizes the number of required external components.

The switching frequency is 200KHz, allowing for small component size. Thermal shutdown and short-circuit protection (SCP) provide reliable and fault-tolerant operations. Low quiescent current allows the U3504DA to be used in battery-powered applications.

The U3504DA is available in a ESOP-8 package with an exposed pad.

■ Key Features

- Integrated high voltage start circuit
- Default 5V output（Type）
- Built-In 150V/288mΩ MOSFET
- Built-in Bootstrap Diode
- Hysteretic Control: No Compensation
- 200KHz Switching Frequency
- PWM Dimming Control Input for step-down Application
- Short-Circuit Protection (SCP) with Integrated High-Side MOSFET
- Low Quiescent Current
- Thermal Shutdown
- Available in a ESOP-8 Package with an Exposed Pad

■ Applications

- Scooters, E-Bike Control Power Supplies
- Solar Energy Systems
- Automotive System Power
- Industrial Power Supplies
- High-Power LED Drivers
- USB

■ Simplified Application

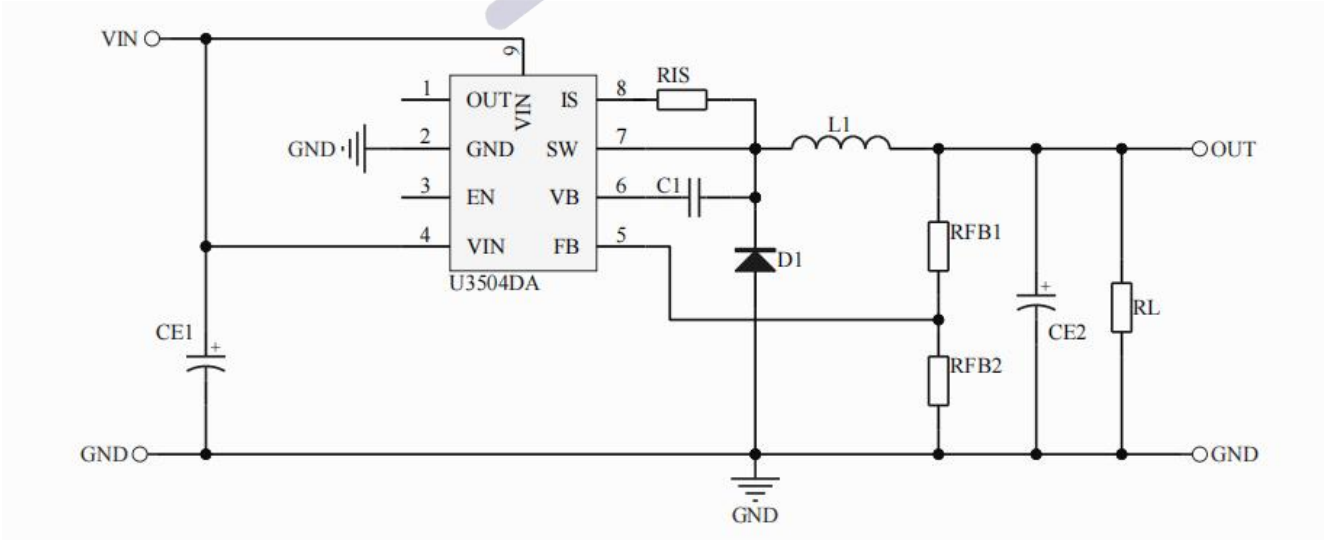

■ Ordering Information

Part Number	Package	Vo	VIN MAX	IPK	Description
U3504DA	ESOP-8	＞2V	150V	7A	4000Pcs/Reel

■ Pin Description

TOP VIEW

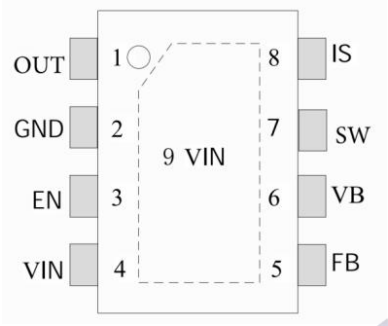

ESOP-8

■ Pin Functions

ESOP-8 Pin #	Name	Description
1	OUT	Default 5V output（Type）
2	GND	Ground. GND
3	EN	En input.Default suspension, built-in resistance
4、9	VIN	Input supply. VIN supplies power to all of the internal control circuitries.
5	FB	Feedback. FB is the input to the voltage hysteretic comparators.
6	VB	VB is the positive power supply for the internal, floating, high-side MOSFET driver. Connect a bypass capacitor between VB and SW.
7	SW	Switch node.
8	IS	Current detection. Current Sensing Input.

■ Block Diagram

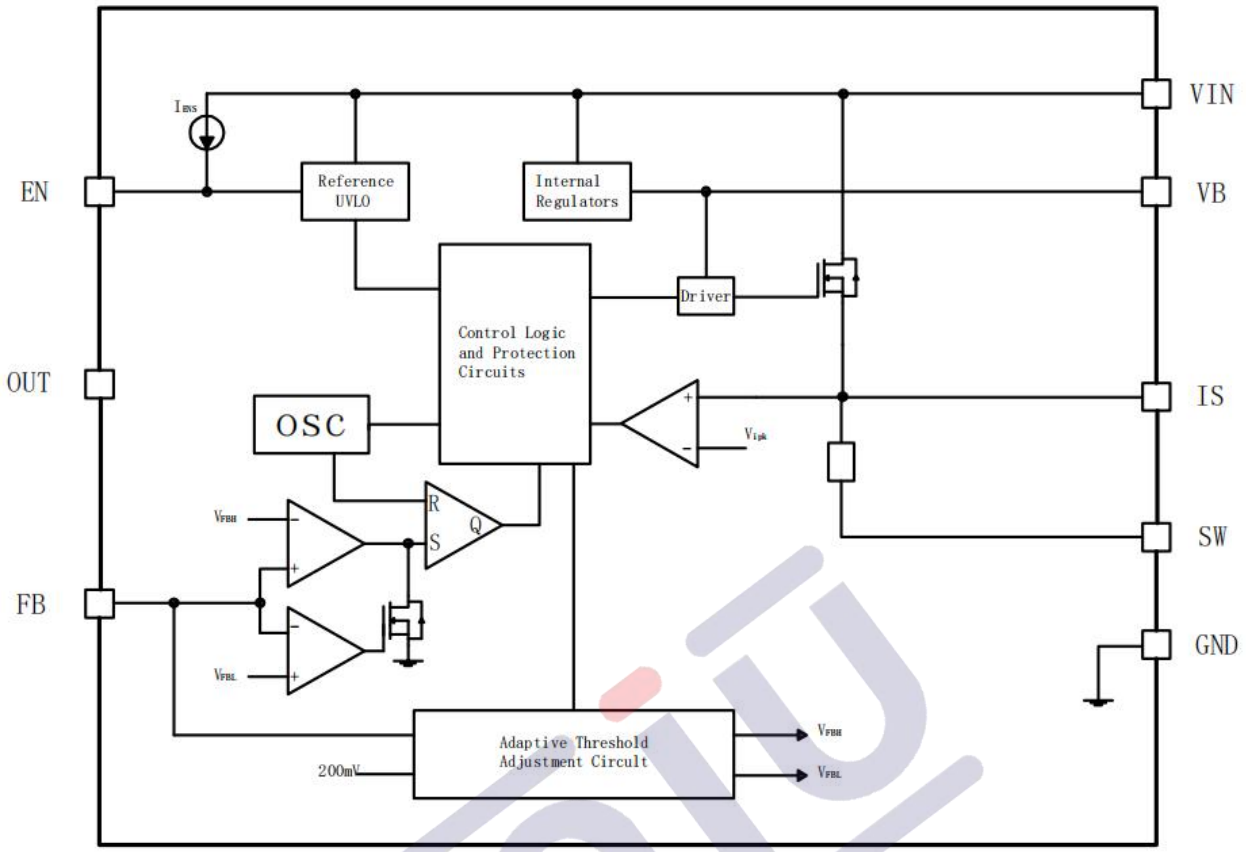

Figure 1:Function Block Diagram

■ Absolute Maximum Ratings (Note 1)

Parameter	Value	Unit
VIN,SW,IS Pin Voltage Range	-0.3 to 150	V
VB Supply Voltage	150+20	V
FB, EN Voltage Range	-0.3 to 7	V
Package Thermal Resistance ---Junction to Ambient (ESOP-8)	55	°C/W
Maximum Junction Temperature	160	°C
Storage Temperature Range	-65 to 150	°C
Lead Temperature (Soldering, 10sec.)	260	°C
ESD Capability, HBM (Human Body Model)	2	kV
ESD Capability, MM (Machine Model)	200	V

Note1: For electrostatic sensitive devices, pay attention to ESD prevention measures when operating them.

■ Electrical Characteristics

V_{IN} = 60V, T_A = +25°C, unless otherwise noted. Specifications over temperature are guaranteed by design and characterization.

Parameter	Symbol	Condition	Min	Typ	Max	Units
OUT	V_{OUT}	V_{IN}=60V	—	5	—	V
Shutdown supply current		V_{EN} = 0V	—	4	—	μA
Quiescent supply current		No load, DIM = low, V_{FB} = 1.4V	—	0.7	—	mA
Upper switch on resistance	$R_{DS(ON)}$	V_{VB} - V_{SW}= 12V	—	240	288	mΩ
Upper switch leakage current	I_{SWLK}	V_{EN} = 0V, V_{SW} = 0V	—	0.02	1.5	μA
Current limit	I_{PK}	V_{FB} = 1.3V	—	3	—	A
Working frequency	F_{SW}		—	200	—	KHz
EN -on	V_{ENH}		—	2.4	7	V
EN -off	V_{ENL}		—	—	1	V
EN threshold hysteresis	V_{ENHY}		—	500	—	mV
Feedback voltage threshold	V_{FBH}		1.25	1.30	—	V
Peak current threshold	V_{IPK}		215	230	245	mV
FB to ground resistance	R_{FB}		—	50K	—	Ω
Thermal shutdown		Trigger thermal shutdown	—	150	—	°C
		Hysteresis	—	20	—	

Note2:(1) Stresses listed as the above “Maximum Ratings” may cause permanent damage to the device. These are for stress ratings. Functional operation of the device at these or any other conditions beyond those indicated in the operational sections of the specifications is not implied. Exposure to maximum rating conditions for extended periods may remain possibility to affect device reliability.
(2) The device is not guaranteed to function outside its operating conditions.
(3) Guaranteed by design.

Operation

Hysteresis Current Control with Adaptive Threshold Adjustment

The U3504DA operates in a hysteretic voltage-control mode to regulate the output voltage. FB is connected to the tap of a resistor divider, which determines the output voltage. The power MOSFET is turned on when the FB voltage (V_{FB}) rises to FBon and remains on until V_{FB} rises to FBoff. The power MOSFET is turned off when V_{FB} drops to FBoff and remains off until VFB falls to FBon. The two thresholds of FBon and FBoff are adjusted adaptively to compensate for all the circuit delays, so the output voltage is regulated with an average 1.30V value at FB.

Floating Driver and Bootstrap Charging

The floating power MOSFET driver is powered by an external bootstrap capacitor.

The bootstrap capacitor is charged and regulated to about 12V by the dedicated internal bootstrap regulator.

If the internal circuit does not have sufficient voltage, and the bootstrap capacitor is not sufficiently charged, extra external circuitry can be used to ensure that the bootstrap voltage is in the normal operating region. Refer to the External Bootstrap Diode section for more details.

Fast charging Function for USB Applications

Because the FB reference of the U3504DA is very flexible, it is recommended to use the U3504DA for USB Fast charging Applications by connecting the current sense resistor between FB and GND.

Thermal Shutdown

Thermal shutdown is implemented to prevent the chip from operating at exceedingly high temperatures. When the silicon die temperature is higher than its upper threshold, the entire chip shuts down. When the temperature is lower than its lower threshold, the chip is enabled again.

Output Short Protection

The output voltage is well-regulated when V_{FB} is around 1.30V. If the output is pulled low in over-current protection (OCP) or is shorted to GND directly, V_{FB} is low, even though the power MOSFET is turned on. The U3504DA regards the low V_{FB} as a failure. The power MOSFET shuts off if the failure time is longer than 10μs. The U3504DA attempts operation again after a delay of about 300μs.

The power MOSFET current is also accurately sensed via a current sense MOSFET. If the current is over the current limit, the IC is shut down. This offers extra protection under output- short conditions.

■ Application Information

Setting the Output Voltage

The output voltage (V_{OUT}) is set by a resistor divider (R1 and R2) (see the Typical Application on page 1). To achieve good noise immunity and low power loss, R2 is recommended to be in the range of 1kΩ to 50kΩ. R1 can then be determined with Equation (1):

$$R1 = \frac{V_{OUT} - V_{FB}}{V_{FB}} \times R2 \quad (1)$$

Where V_{FB} is 1.30V, typically.

FB has 50K resistance inside, and the calculation is in parallel with R2

Output Capacitor and Frequency Setting

The output capacitor (C_{OUT}) is necessary for achieving a smooth output voltage. The ESR of the capacitor should be sufficiently large compared to the capacitance; otherwise, the system may behave in an unexpected way, and the current ripple may be very high. V_{FB} changes from 1.25V to 1.35V when the power MOSFET switches on. To charge the capacitor and generate 1.35V at FB, the system needs ESR and some inductor current. For example, for a 5V V_{OUT}, if the forward capacitor is 0.1μF, the suggested ESR range of the output capacitor is 100mΩ to 250mΩ. Tantalum or aluminum electrolytic capacitors with a small ceramic capacitor are recommended.

A forward capacitor across R1 is recommended when the output capacitor is tantalum or aluminum electrolytic, which can set the desired frequency if the output capacitor and ESR cannot be changed. The forward capacitor can reduce the output voltage ripple.

In some application, simply a forward capacitor may not get proper frequency, then we can add a forward resistor in series with the forward capacitor or even more add a ceramic on the output.

Selecting the Inductor

The inductor (L) is required to convert the switching voltage to a smooth current to the load. Although the output current is low, it is recommended that the inductor current be continuous in each switching period to prevent reaching the current limit. Calculate the inductor value with Equation (2):

$$L = \frac{(V_{IN} - V_{OUT}) \times V_{OUT}}{F_{SW} \times I_{OUT} \times V_{IN} \times K} \quad (2)$$

Where K is a coefficient of about 0. 15 ~ 0.85

Output Rectifier Diode

The output rectifier diode supplies current to the inductor when the high-side switch is off. To reduce losses due to the diode forward voltage and recovery times, use a Schottky diode. The average current through the diode can be approximated with Equation (3):

$$I_D = I_{OUT} \times (1 - \frac{V_{OUT}}{V_{IN}}) \quad (3)$$

Choose a diode with a maximum reverse voltage rating greater than the maximum input voltage and a current rating is greater than the average diode current.

Peak current regulation

Current estimation formula(4)

$$I_{PK} = \frac{V_{IPK}}{R_{CS}} = \frac{0.23V}{Rcs} \quad (4)$$

Note: The voltage calculation will be affected by the freewheeling diode, and the actual debugging shall prevai.l

Input Capacitor (C_{IN})

The input current to the step-down converter is discontinuous and therefore requires a capacitor to supply AC current to the step-down converter while maintaining the DC input voltage. Use low ESR capacitors for the best performance, especially under high switching frequency applications.

The RMS current through the input capacitor can be calculated with Equation (5):

$$I_{IN_AC} = I_{OUT} \times \sqrt{\frac{V_{OUT}}{V_{IN}} \times (1 - \frac{V_{OUT}}{V_{IN}})} \quad (5)$$

With low ESR capacitors, the input voltage ripple can be estimated with Equation (5):

$$\Delta V_{IN} = \frac{I_{OUT} \times V_{OUT}}{F_{SW} \times C_{IN} \times V_{IN}} \times (1 - \frac{V_{OUT}}{V_{IN}}) \quad (6)$$

Choose an input capacitor with enough RMS current rating and enough capacitance for small input voltage ripples.

When electrolytic or tantalum capacitors are applied, a small, high-quality ceramic capacitor (i.e.: 0.1μF) should be placed as close to the IC as possible.

External Bootstrap Diode

An external bootstrap diode may enhance the efficiency of the converter (see Figure 2).

The bootstrap diode can be a low-cost one, Optimize circuit structure, save cost, and reduce error rate for peripheral circuit configuration.

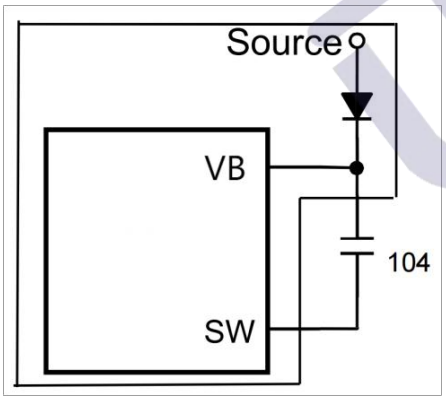

Figure 2: External Bootstrap Diode

PCB Layout Guidelines

Efficient PCB layout is critical for stable operation. For best results, refer to Figure 3 and follow the guidelines below.

1.Place the input decoupling capacitor, catch diode, and the U3504DA (VIN, SW, and PGND) as close to each other as possible.

2.Keep the power traces very short and fairly wide, especially for the SW node.This can help greatly reduce voltage spikes on the SW node and lower the EMI noise level.

3.Run the feedback trace as far from the inductor and noisy power traces (like the SW node) as possible.

4.Place thermal vias with 15mil barrel diameter and 40mil pitch (distance between the centers) under the exposed pad

■ Typical Application Circuit

APP1: V_{OUT} =5V

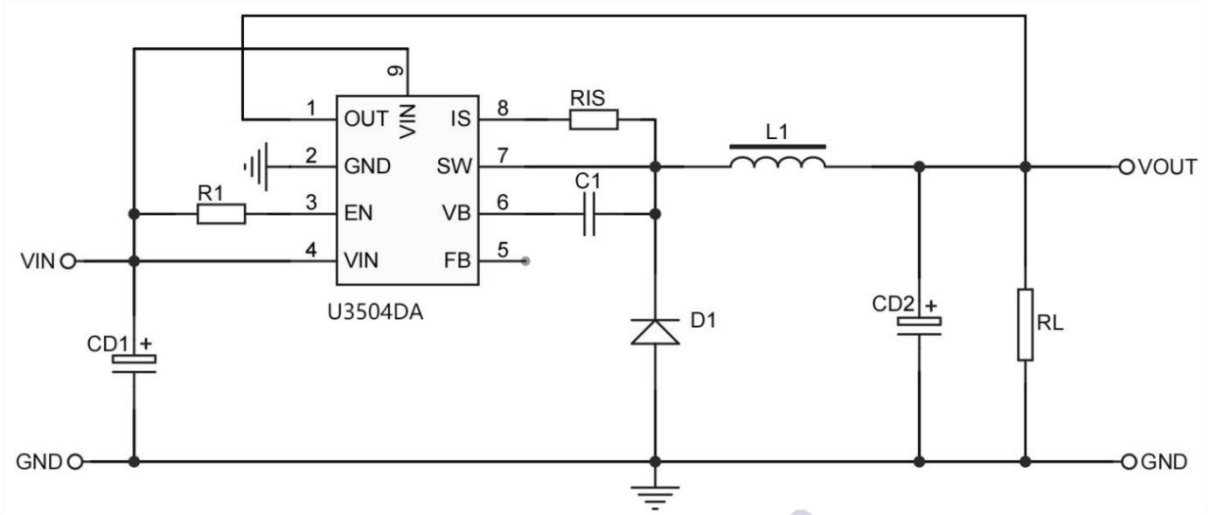

APP2: V_{OUT} <10V

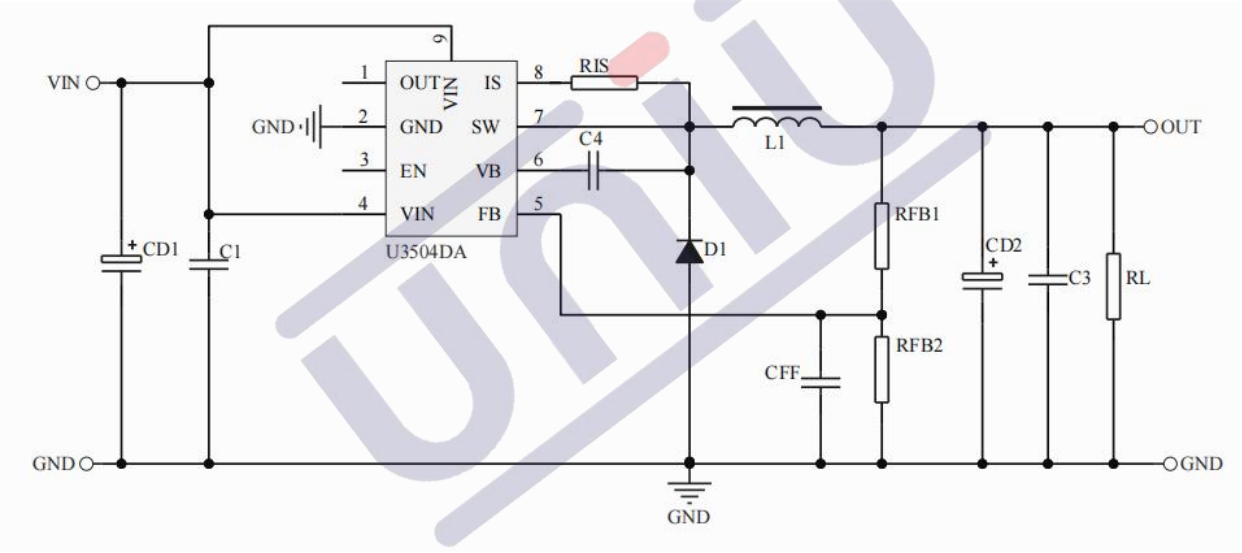

APP3:VOUT=10~15V

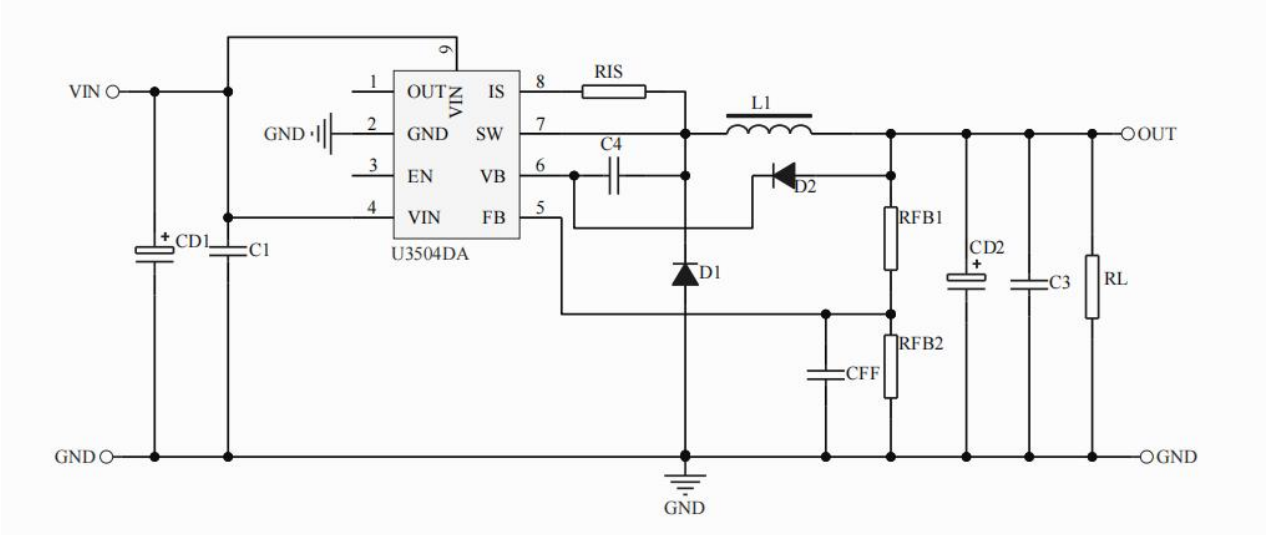

APP4:VOUT12V/VOUT5V

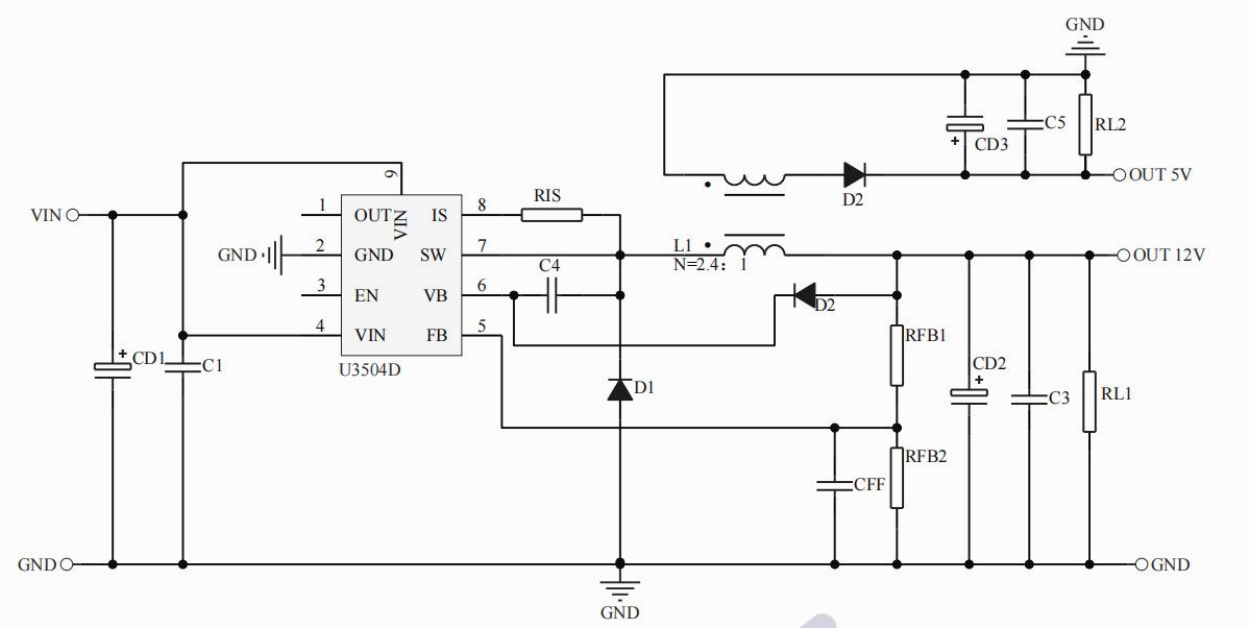

APP5:QC2.0/QC3.0

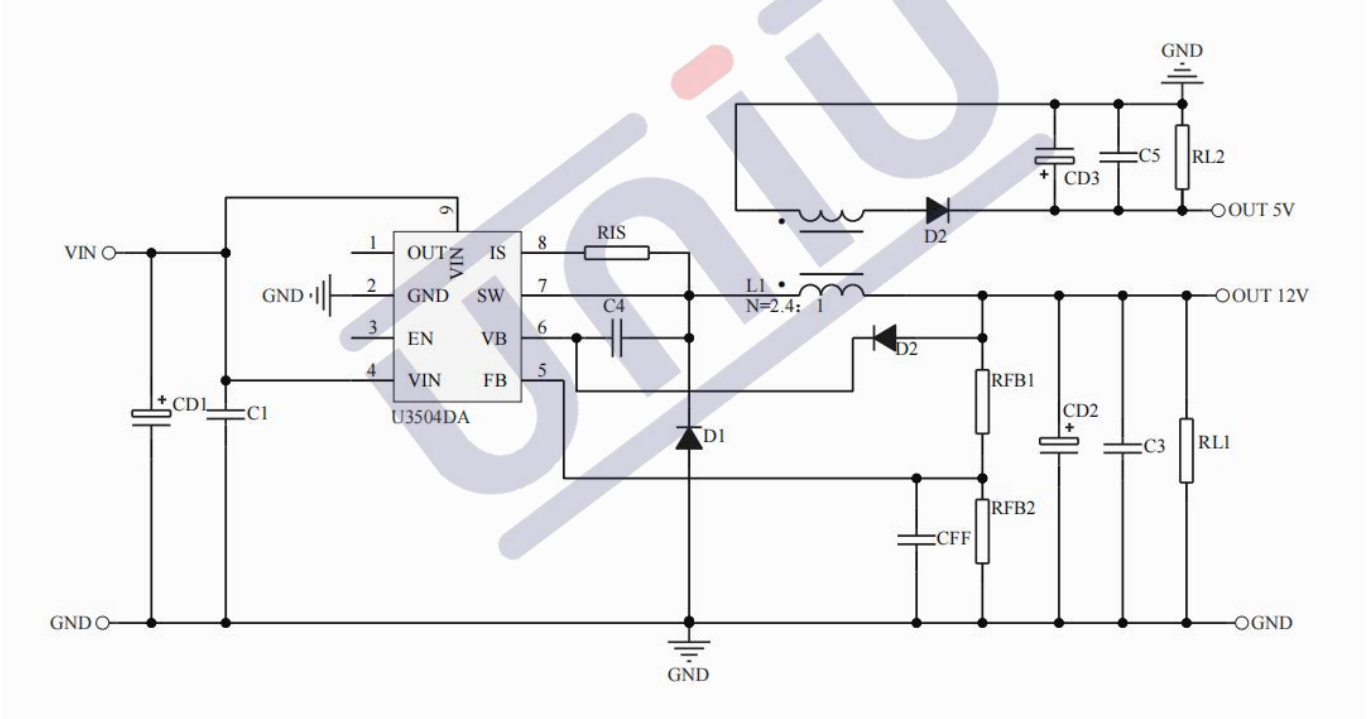

Note3:(1) Typical application circuit and parameters for reference, the actual application circuit parameters please set on the basis of measurement, mass production please communicate with the original factory, other unknown please contact our engineers.
(2) Input electrolytic capacitor (CE1) and continuous current diode (D1) according to the actual use of voltage, current to adjust.
(3) Continuous current diode recommended to use Schottky.

■ Package Information

ESOP8 (EXPOSED PAD)

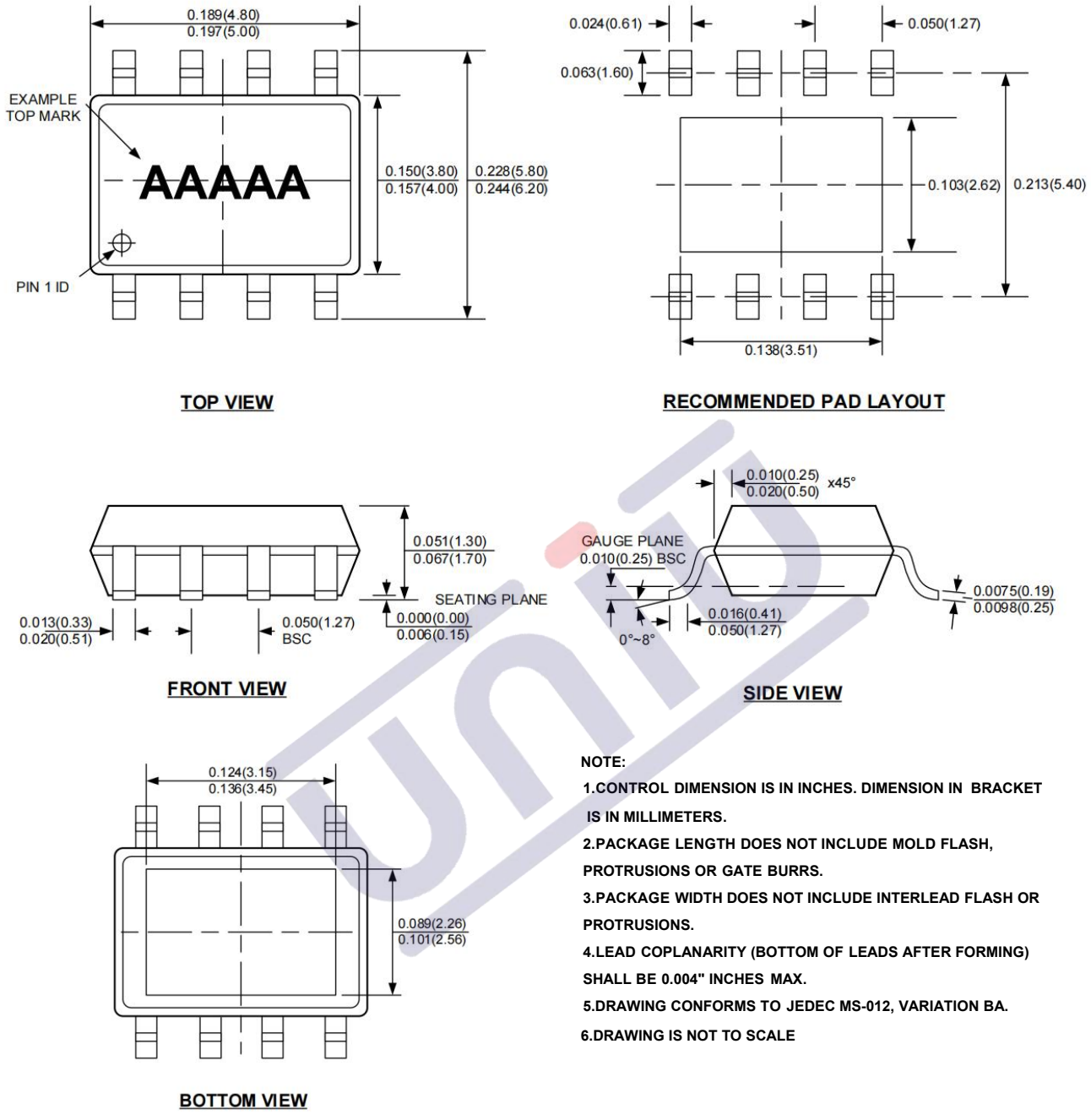

NOTE:

1.CONTROL DIMENSION IS IN INCHES. DIMENSION IN BRACKET IS IN MILLIMETERS.

2.PACKAGE LENGTH DOES NOT INCLUDE MOLD FLASH, PROTRUSIONS OR GATE BURRS.

3.PACKAGE WIDTH DOES NOT INCLUDE INTERLEAD FLASH OR PROTRUSIONS.

4.LEAD COPLANARITY (BOTTOM OF LEADS AFTER FORMING) SHALL BE 0.004" INCHES MAX.

5.DRAWING CONFORMS TO JEDEC MS-012, VARIATION BA.

6.DRAWING IS NOT TO SCALE

Note4: The information in this document is subject to change without notice. Users should warrant and guarantee that third party Intellectual Property rights are not infringed upon when integrating UNI products into any application. UNI will not assume any legal responsibility for any said applications.

1、Version Record

Date	Rev.	Description
2025/3/12	1.0	First Release

2、Contact

Shaoxing Yuli Semiconductor CO.,LTD

Shaoxing Address：4th & 5th Floors, Building 45, CECEP Science and Technology Innovation Park, No. 25 Paodu Road, Doumen Subdistrict, Yuecheng District, Shaoxing City, Zhejiang Province, China

Telephone：0575-85087896（R&D Department）

Fax：0575-88125157

E-mail：htw@uni-semic.com

Wuxi Address：Room 503, Building 1# (Comprehensive Building), China Electronics (Wuxi) Digital Chip City, No. 6 Xianfeng Middle Road, Xishan District, Wuxi City, Jiangsu Province, China

Telephone：0510-85297939

E-mail：zh@uni-semic.com

Shenzhen Address：Room 410, Yonghui International Business Building, Baoyuan Road, Nanchang Community, Xixiang Subdistrict, Bao'an District, Shenzhen, Guangdong Province, China

Telephone：0755-84510976

E-mail：htw@uni-semic.com

Disclaimers:

1.Shaoxing Yuli Semiconductor Co.,LTD., (referred to as "Yuli"), reserves the right to modify user manuals, application guidelines, etc., without prior notice. When purchasing, customers should obtain the latest version of our company's materials and verify whether the relevant information is up-to-date and complete. Before using the products,please carefully read the user manuals, application guides, and other relevant materials along with all precautions contained therein.

2.This product is intended for consumer electronics use and Yuli makes no guarantees as to the suitability of Yuli products for any particular purposes. The products must not be applied in any equipment or system whose manufacture, use, or sale is prohibited by applicable laws or regulations. If Yuli's products are utilized in such prohibited devices or systems, all risks associated with such applications shall be solely borne by the customer, and Yuli shall not be held liable for any consequences arising therefrom.

3.The applications of the products described in this document and related materials such as application guides are provided for illustrative reference only. The parameters provided in this document may and do vary in different applications, and the actual performance may change accordingly. Further evaluation, testing, and validation are required during use. Yuli disclaims all responsibility for any assistance provided in the application of its products or the design of customer products.

4.Customers must utilize the products within their valid storage period. If customers have any questions regarding the valid storage period of Yuli's products, please contact Yuli's sales personnel or customer service support immediately. Yuli shall not assume any responsibility for the use of products beyond their storage period.

5.Without the prior written consent of Yuli, the files and products shall not be disassembled, altered, modified, or copied.

6.When purchasing products, please verify the Yuli trademark and product specifications. For any inquiries, please contact Yuli for clarification. Third-party purchasers are advised to confirm whether the seller holds authorized credentials from Yuli and must contact our company prior to procurement to ensure the products are genuine Yuli-manufactured items.

7.When using or applying the products, customers must comply with all applicable laws and regulations, including but not limited to trade control regulations, etc. This product is designated for civilian electronic purposes. It must not be used in non-civilian fields.

8.Product improvement is an endless journey. Our company remains fully committed to delivering superior products to our customers!