6.0A Single-Phase Silicon Bridge Rectifier

1 General Description

1.1 Features

- Ideal for printed circuit board mounting
- This series is UL listed under the Recognized Component Index, file number E484648
- The plastic material used carries Underwriters Laboratory flammability recognition 94V-0
- Built-in printed circuit board stand-offs
- High case dielectric strength
- High temperature soldering guaranteed 260 ℃ /5 seconds at 5 lbs (2.3kg) tension

REVERSE VOLTAGE
50-1000V
FORWARD CURRENT
6Amperes

1.2 Typical Applications

- General-purpose bridge rectifiers, Rectification for SMPS, PD fast chargers, small household appliance control boards, and other bridge rectification applications.

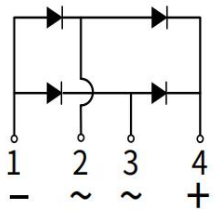

1.3 Mechanical Data

- Case: Reliable low cost construction utilizing molded plastic technique
- Terminals: Plated leads solderable per MIL-STD-202, Method 208
- Mounting Position: Any

2 Maximum Ratings(TA=25℃ Unless otherwise specified)

PARAMETER	SYMBOL	KBL6005	KBL601	KBL602	KBL604	KBL606	KBL608	KBL610	UNIT
Maximum Repetitive Peak Reverse Voltage	V_{RRM}	50	100	200	400	600	800	1000	V
Maximum RMS Bridge Input Voltage	V_{RMS}	35	70	140	280	420	560	700	V
Maximum DC Blocking Voltage	V_{DC}	50	100	200	400	600	800	1000	V
Maximum Average Forward Rectified Output Current Tc=100℃(with heatsink)	$I_{F(AV)}$	6.0							A
Peak Forward Surge Current Single Sine-Wave Superimposed On Rated Load (JEDEC Method)	I_{FSM}	150							A
Rating for fusing (t<8.3ms)	I^2t	95							A^2sec
Operating Temperature Range	T_J	-55 to +150							℃
Storage Temperature Range	T_{STG}	-55 to +150							℃

Notes:1.Thermal resistance from Junction to Ambemt on P.C.board mounting.

2.Resistive or Inductive load, 60 Hz.For Capacitive load derate by 20 %.

3 Electrical Characteristics(TA=25℃ Unless otherwise specified)

PARAMETER		SYMBOL	KBL6005	KBL601	KBL602	KBL604	KBL606	KBL608	KBL610	UNIT
Maximum instantaneous Forward Voltage drop per leg at 3.0A		V_F	1.1							V
Maximum DC Reverse Current at Rated DC Blocking Voltage	T_A=25℃	I_R	10							μA
	T_A=125℃		500							

4 Characteristics Curves(TA=25℃ Unless otherwise specified)

Fig. 1 Derating Curve for Output Rectified Current

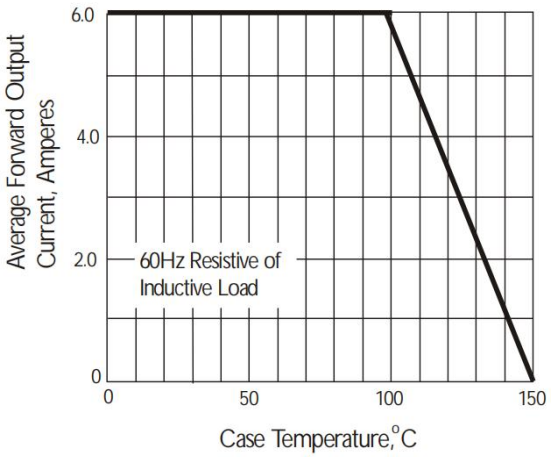

Fig. 2 Maximum Non-repetitive Peak Forward Surge Current

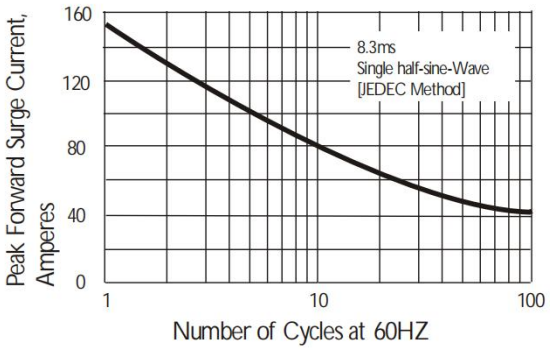

Fig. 3 Typical Instantaneous Forward Characteristics

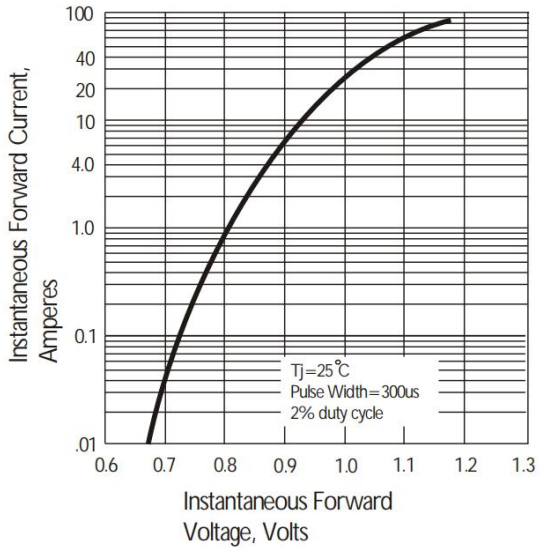

Fig. 4 Typical Reverse Characteristics

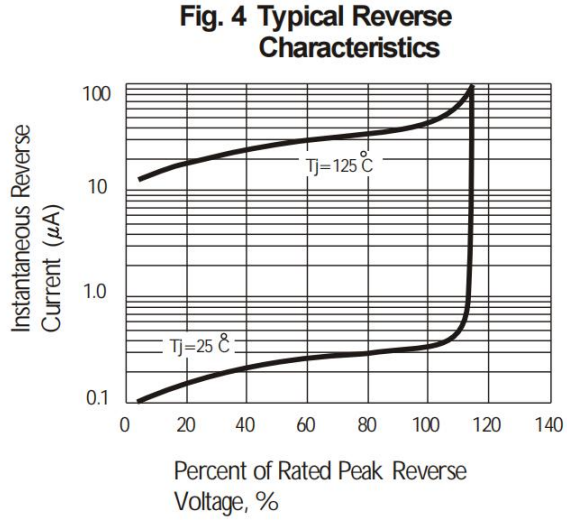

5 Package Outline Dimensions

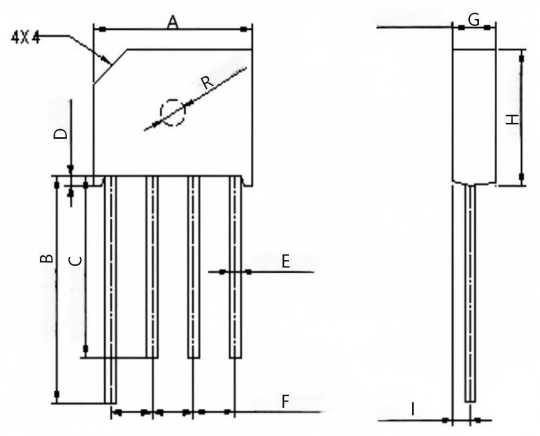

Symbol	UNIT(mm)	
	Min	Max
A	18.80	19.20
B	21.30	23.30
C	16.00	18.00
D	0.80	1.20
E	1.10	1.30
F	4.88	5.28
G	4.90	5.30
H	15.60	16.00
I	1.80	2.20
R	2.90	3.10

6 Ordering Information

PACKAGE	UNIT WEIGHT (g)	BOX (pcs)	CARTON (pcs)
KBL	Approximate 4.39	500	3000

Disclaimer

1. All information contained in this document is for reference only. Shandong Baocheng Electronics Co.,Ltd reserves the right to revise this document, product specifications and related data at any time without prior notice. Customers shall obtain and confirm the latest product documents and specifications before purchasing or using the products.

2. Under no circumstances shall the Company be liable for any failure or damage caused by the operation of semiconductor devices beyond the maximum rated values.

3. Shandong Baocheng Electronics Co.,Ltd does not warrant the suitability of its products for any specific application and assumes no responsibility for customer's complete machine design or application debugging. Without written approval, products are prohibited from being used as key components of life support equipment. The Company shall not be liable for any consequences arising from unauthorized use.

4. No intellectual property license of Shandong Baocheng Electronics Co.,Ltd is granted, explicitly or implicitly, through this document.