1.DESCRIPTION

The XL2515 is a Controller Area Network (CAN) controller that is stand-alone and implements the CAN version 2.0B specification. The controller can simultaneously transmit and receive standard and extended data as well as remote frames. The XL2515 has two receive masks and six receive filters to filter out unwanted information, minimized the workload on the host MCU. The XL2515 is interfaced to the microcontroller (MCU) via a standard serial peripheral interface (SPI).

2 . FEATURES

- Low-Power CMOS Technology:
  - ✔ Operates from 2.7V-5.5V
  - ✔ 5 mA active current (typical)
  - ✔ 5μA standby current (typical) (Sleep mode)
- Implements CAN V2.0B at 1 Mb/s:
  - ✔ 0 to 8-byte length in the data field
  - ✔ Standard and extended data and remote frames
- Receive Buffers, Masks and Filters:
  - ✔ Two receive buffers with prioritized message storage
  - ✔ Six 29-bit filters
  - ✔ Two 29-bit masks
- Start-of-Frame (SOF) Signal is Available for Monitoring the SOF Signal:
  - ✔ Can be used for time slot-based protocols and/or bus diagnostics to detect early bus degradation
- High-Speed SPI Interface (10 MHz):
  - ✔ SPI Modes 0,0 and 1,1
- **XL2515-TSSQ Passed AEC-Q100 Qualified**
- One-Shot mode Ensures Message Transmission is Attempted Only One Time
- Clock Out Pin with Programmable Pre-scaler:
  - ✔ Can be used as a clock source for other device(s)
- Request-to-Send (RTS) Input Pins Individually Configurable as:
  - ✔ Control pins to request transmission for each transmit buffer
  - ✔ General purpose inputs
- Interrupt Output Pin with Selectable Enables
- Three Transmit Buffers with Prioritization and Abort Features
- Data Byte Filtering on the First Two Data Bytes (applies to standard data frames)
- Buffer Full Output Pins Configurable as:
  - ✔ Interrupt output for each receive buffer
  - ✔ General purpose output
- Temperature Ranges:
  - ✔ Industrial : -40°C to +105°C
  - ✔ Extended (Q): -40°C to +125°C

3 . PACKAGE AND PINOUT

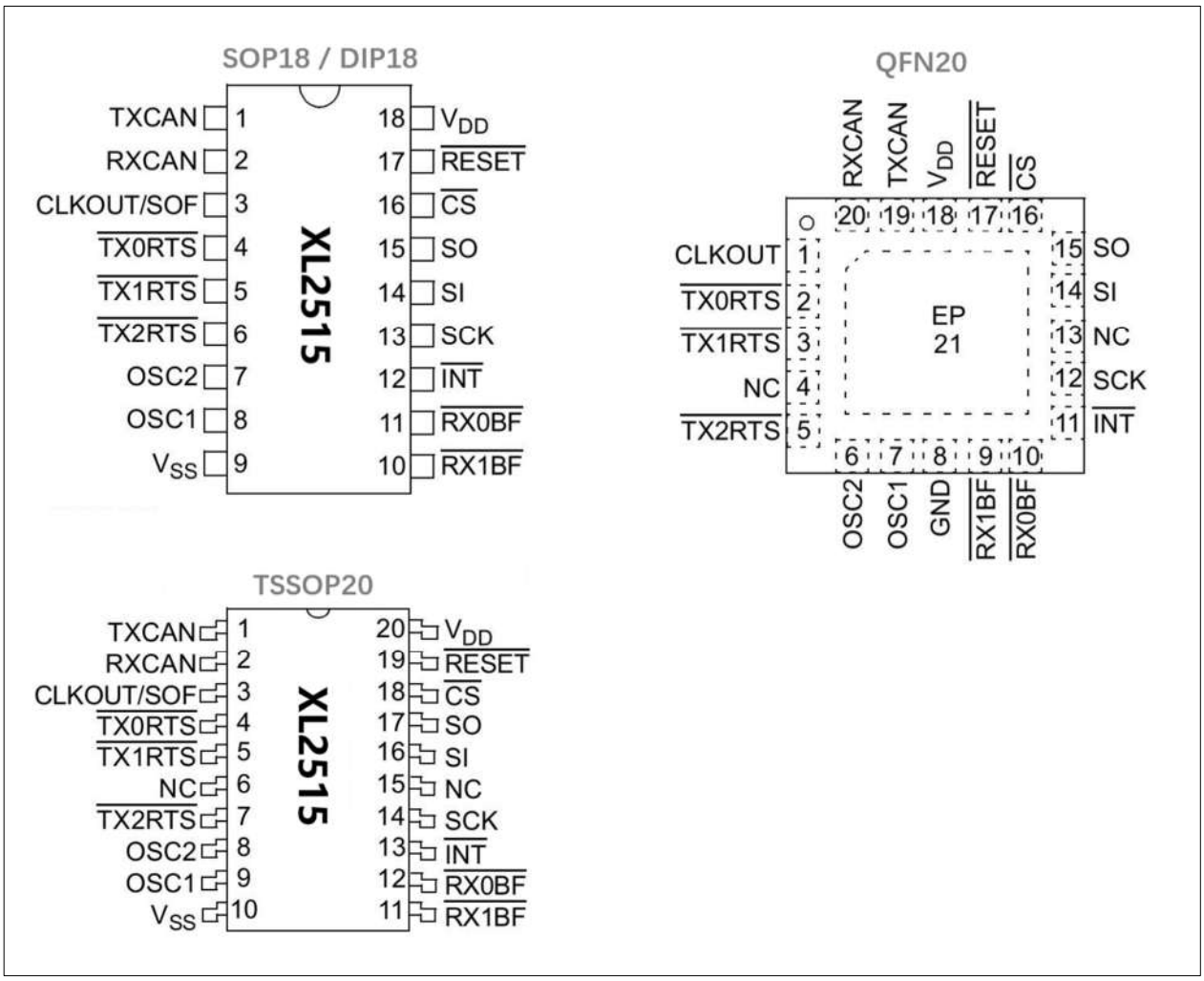

(NOTE: THE ABOVE VIEWING ARE ALL TOP VIEWS, AND NOT TO SCALE)

4 . PIN CONFIGURATIONS AND FUNCTIONS

Name	PDIP/ SOIC Pin #	TSSOP Pin #	QFN Pin #	I/O/P Type	Description	Alternate Pin Function
TXCAN	1	1	19	O	Transmit output pin to CAN bus	—
RXCAN	2	2	20	I	Receive input pin from CAN bus	—
CLKOUT	3	3	1	O	Clock output pin with programmable prescaler	Start-of-Frame signal
$\overline{\text{TX0RTS}}$	4	4	2	I	Transmit buffer TXB0 Request-to-Send; 100 kΩ internal pull-up to V_{DD}	General purpose digital input, 100 kΩ internal pull-up to V_{DD}
$\overline{\text{TX1RTS}}$	5	5	3	I	Transmit buffer TXB1 Request-to-Send; 100 kΩ internal pull-up to V_{DD}	General purpose digital input, 100 kΩ internal pull-up to V_{DD}
$\overline{\text{TX2RTS}}$	6	7	5	I	Transmit buffer TXB2 Request-to-Send; 100 kΩ internal pull-up to V_{DD}	General purpose digital input, 100 kΩ internal pull-up to V_{DD}
OSC2	7	8	6	O	Oscillator output	—
OSC1	8	9	7	I	Oscillator input	External clock input
V_{SS}	9	10	8	P	Ground reference for logic and I/O pins	—
$\overline{\text{RX1BF}}$	10	11	9	O	Receive buffer RXB1 interrupt pin or general purpose digital output	General purpose digital output
$\overline{\text{RX0BF}}$	11	12	10	O	Receive buffer RXB0 interrupt pin or general purpose digital output	General purpose digital output
$\overline{\text{INT}}$	12	13	11	O	Interrupt output pin	—
SCK	13	14	12	I	Clock input pin for SPI interface	—
SI	14	16	14	I	Data input pin for SPI interface	—
SO	15	17	15	O	Data output pin for SPI interface	—
$\overline{\text{CS}}$	16	18	16	I	Chip select input pin for SPI interface	—
$\overline{\text{RESET}}$	17	19	17	I	Active-low device Reset input	—
V_{DD}	18	20	18	P	Positive supply for logic and I/O pins	—
NC	—	6,15	4,13	—	No internal connection	—
EP	—	—	21	—	Exposed Thermal Pad, connect to V_{SS}	—

Legend: I = Input; O = Output; P = Power

5. CAN-BUS APPLICATION CIRCUIT EXAMPLE

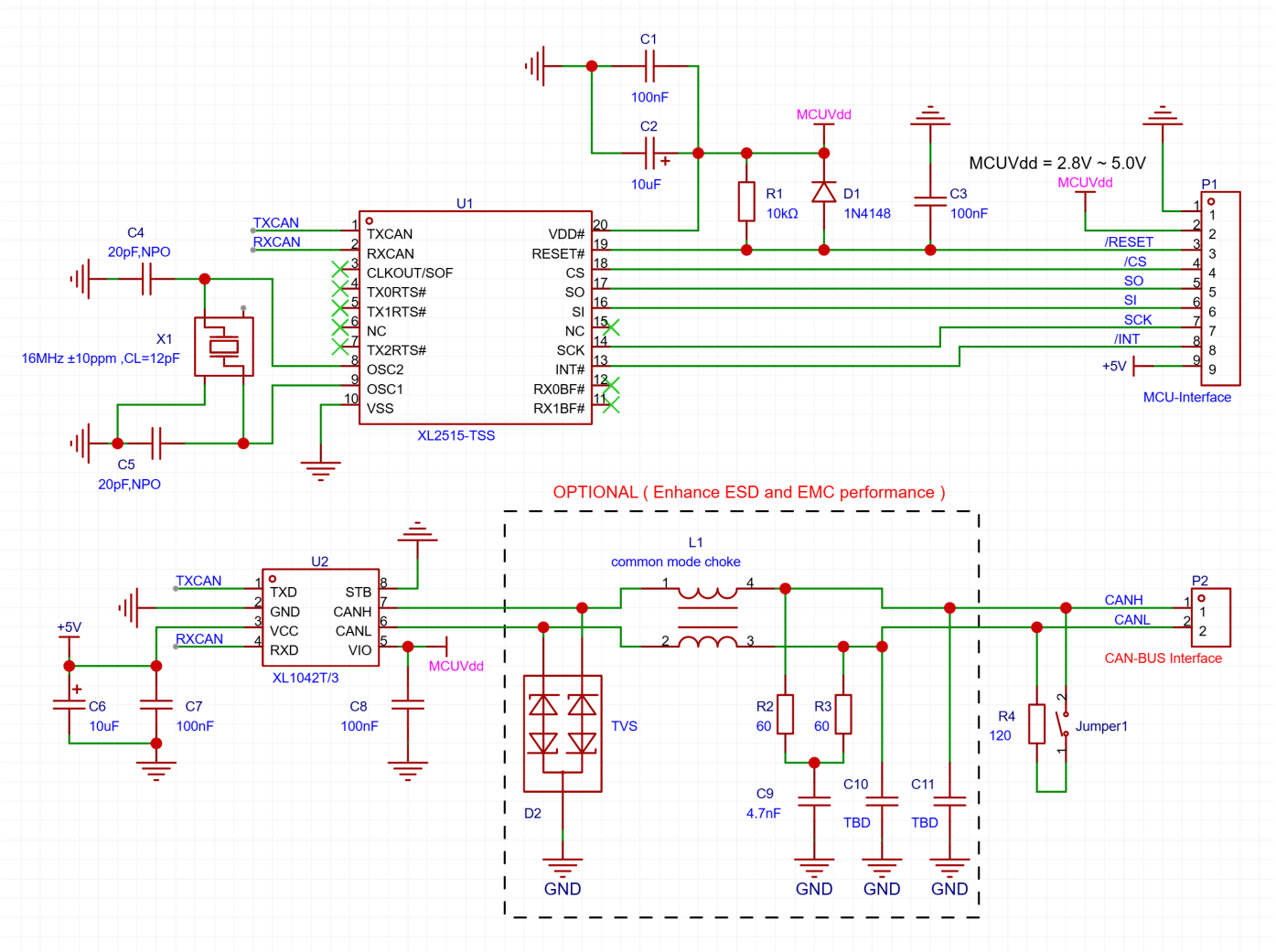

6. DEVICE DETAILED DESCRIPTION

The XL2515 is a stand-alone CAN controller developed to simplify applications that require interfacing with a CAN bus. A simple block diagram of the XL2515 is shown in Figure 1-1. The device consists of three main blocks:

1. The CAN module, which includes the CAN protocol engine, masks, filters, transmit and receive buffers.

2. The control logic and registers that are used to configure the device and its operation.

3. The SPI protocol block.

An example system implementation using the device is shown in Figure 1-2 or Section 5.0

Figure 1-1 BLCOK DIAGRAM

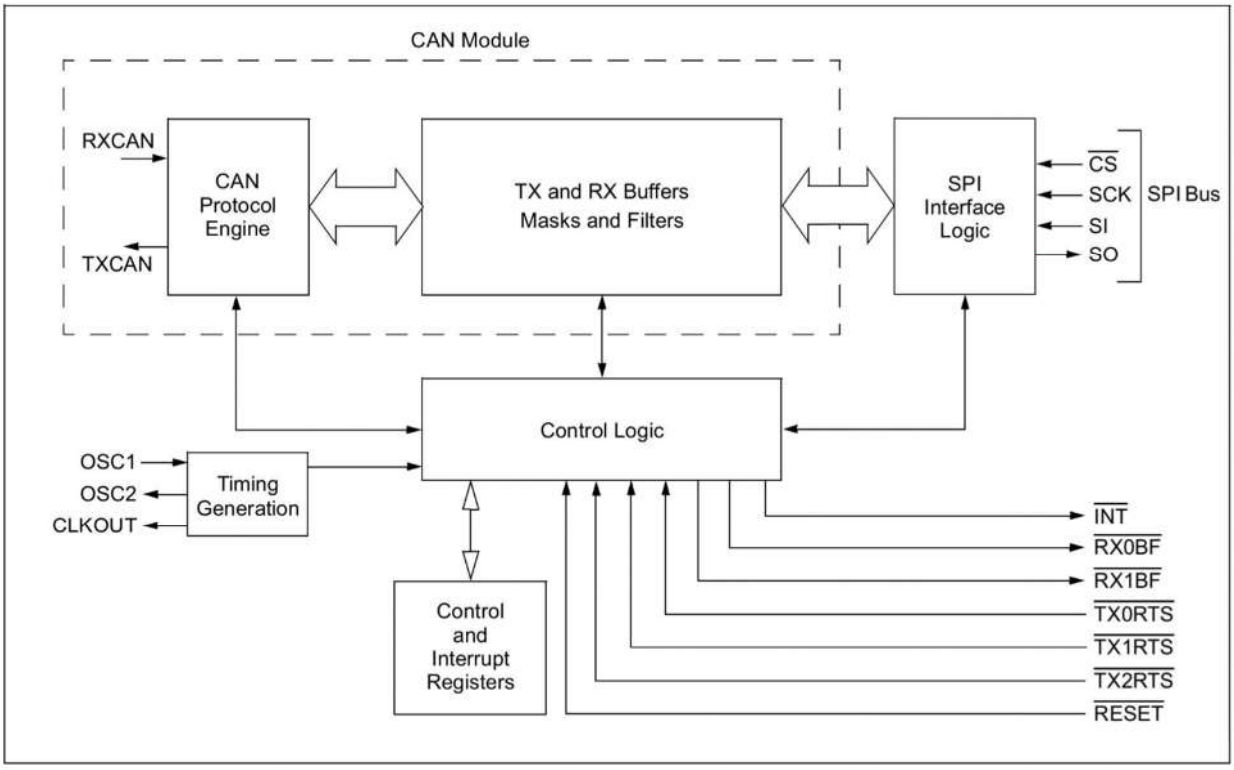

6.1 CAN Module

The CAN module handles all functions for receiving and transmitting messages on the CAN bus. Messages are transmitted by first loading the appropriate message buffer and control registers. Transmission is initiated by using control register bits via the SPI interface or by using the transmit enable pins. Status and errors can be checked by reading the appropriate registers. Any message detected on the CAN bus is checked for errors and then matched against the user-defined filters to see if it should be moved into one of the two receive buffers.

Figure 1-2 EXAMPLE SYSTEM IMPLEMENTATION FOR CAN BUS

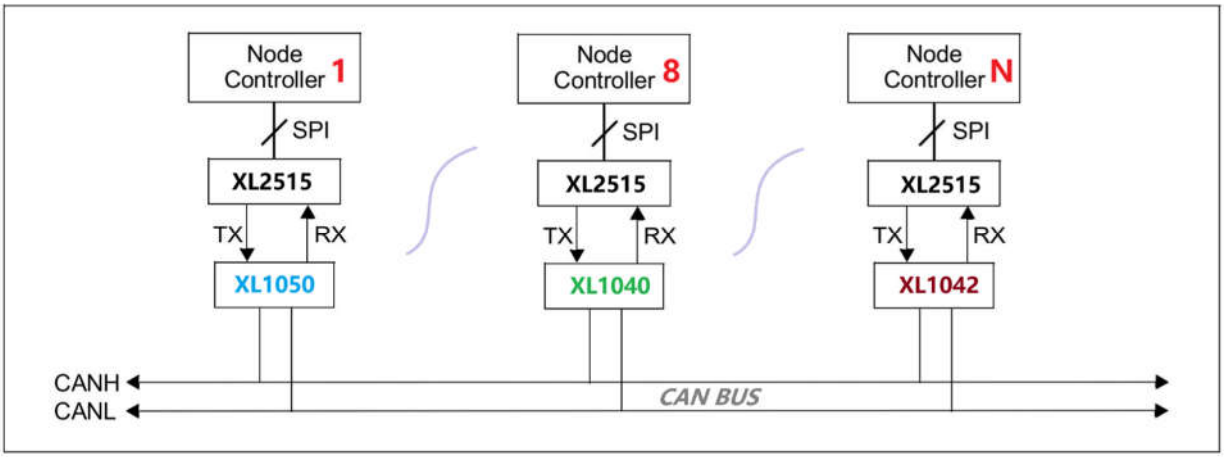

(NOTE: THE ABOVE CHIP XL1050/1040/1042 ARE CAN BUS TRANSCEIVER FROM XINLUDA)

6.2 Control Logic

The control logic block controls the setup and operation of the XL2515 by interfacing to the other blocks in order to pass information and control.

Interrupt pins are provided to allow greater system flexibility. There is one multipurpose interrupt pin (as well as specific interrupt pins) for each of the receive registers that can be used to indicate a valid message has been received and loaded into one of the receive buffers. Use of the specific interrupt pins is optional. The general purpose interrupt pin, as well as status registers (accessed via the SPI interface), can also be used to determine when a valid message has been received.

Additionally, there are three pins available to initiate immediate transmission of a message that has been loaded into one of the three transmit registers. Use of these pins is optional, as initiating message transmissions can also be accomplished by utilizing control registers accessed via the SPI interface.

6.3 SPI Protocol Block

The MCU interfaces to the device via the SPI interface. Writing to, and reading from, all registers is accomplished using standard SPI read and write commands, in addition to specialized SPI commands.

6.4 Transmit/Receive Buffers/Masks/ Filters

The XL2515 has three transmit and two receive buffers, two acceptance masks (one for each receive buffer) and a total of six acceptance filters. Figure 1-3 shows a block diagram of these buffers and their connection to the protocol engine.

FIGURE 1-3: CAN BUFFERS AND PROTOCOL ENGINE BLOCK DIAGRAM

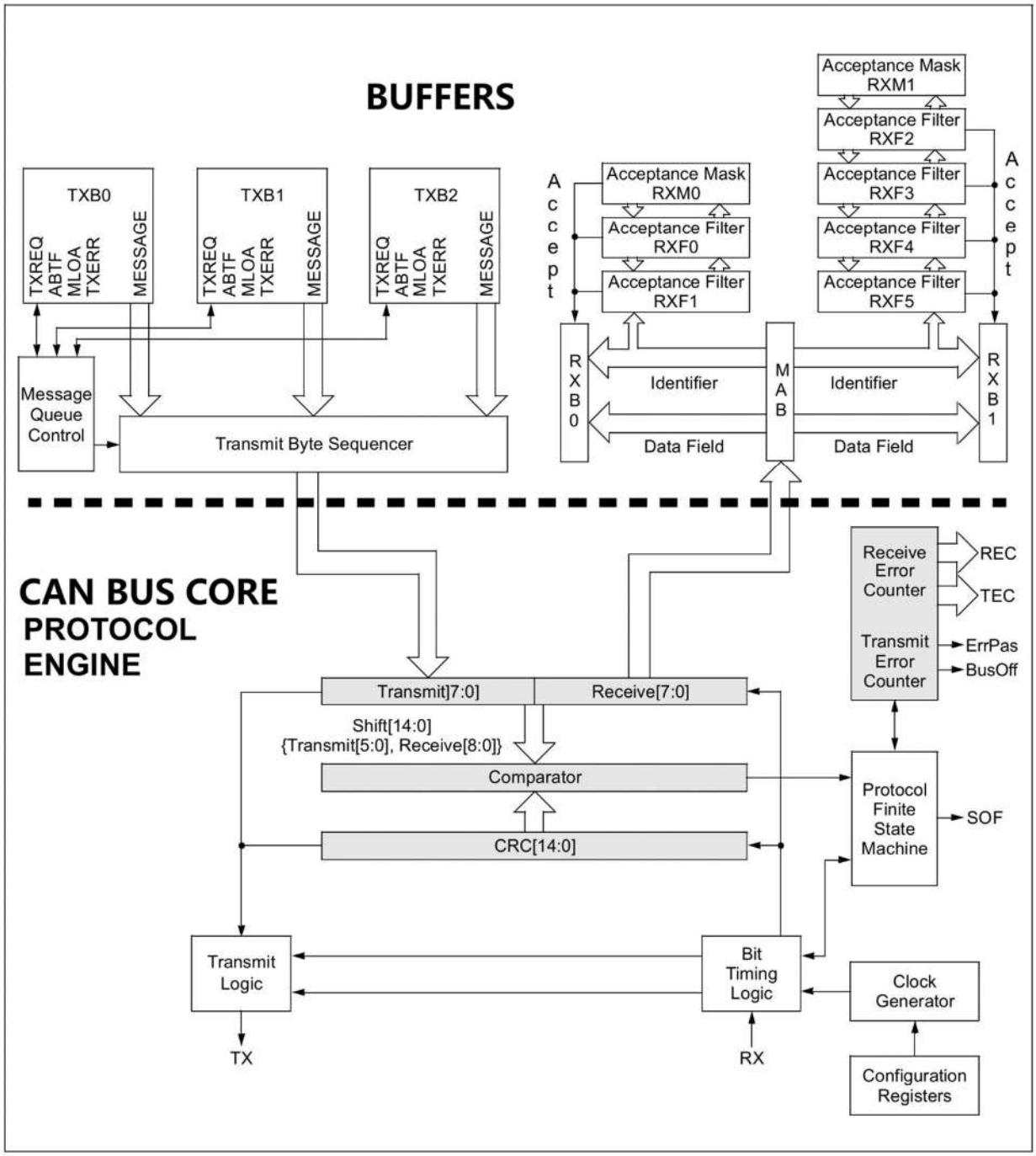

6.5 CAN Protocol Engine

The CAN protocol engine combines several functional blocks, shown in Figure 1-4 and described below.

FIGURE 1-4: CAN PROTOCOL ENGINE BLOCK DIAGRAM

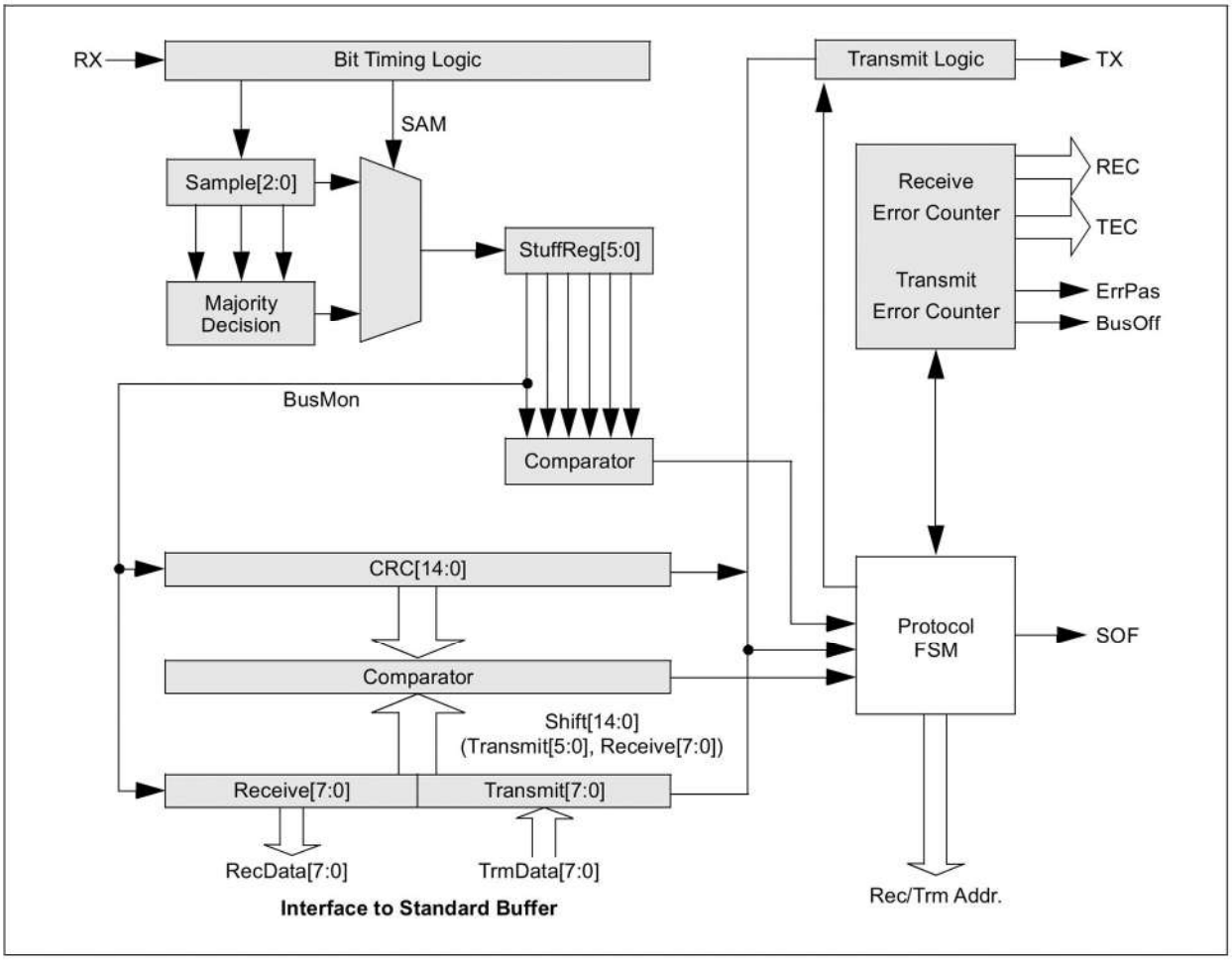

6.5.1 PROTOCOL FINITE STATE MACHINE

The heart of the engine is the Finite State Machine (FSM). The FSM is a sequencer that controls the sequential data stream between the TX/RX Shift register, the CRC register and the bus line. The FSM also controls the Error Management Logic (EML) and the parallel data stream between the TX/RX Shift registers and the buffers. The FSM ensures that the processes of reception, arbitration, transmission and error signaling are performed according to the CAN protocol. The automatic retransmission of messages on the bus line is also handled by the FSM.

6.5.2 CYCLIC REDUNDANCY CHECK

The Cyclic Redundancy Check register generates the Cyclic Redundancy Check (CRC) code, which is transmitted after either the Control Field (for messages with 0 data bytes) or the Data Field and is used to check the CRC field of incoming messages.

6.5.3 ERROR MANAGEMENT LOGIC

The Error Management Logic (EML) is responsible for the Fault confinement of the CAN device. Its two counters, the Receive Error Counter (REC) and the Transmit Error Counter (TEC), are incremented and decremented by commands from the bit stream processor. Based on the values of the error counters, the CAN controller is set into the states: error-active, error-passive or bus-off.

6.5.4 BIT TIMING LOGIC

The Bit Timing Logic (BTL) monitors the bus line input and handles the bus related bit timing according to the CAN protocol. The BTL synchronizes on a recessive- to-dominant bus transition at the Start-of-Frame (hard synchronization) and on any further recessive-to- dominant bus line transition if the CAN controller itself does not transmit a dominant bit (resynchronization). The BTL also provides programmable Time Segments to compensate for the propagation delay time, phase shifts and to define the position of the sample point within the bit time. The programming of the BTL depends on the baud rate and external physical delay times.

7 . CAN MESSAGE FRAMES

The XL2515 supports standard data frames, extended data frames and remote frames (standard and extended), as defined in the CAN 2.0B specification.

7.1 Standard Data Frame

The CAN standard data frame is shown in Figure 2-1. As with all other frames, the frame begins with a Start- of-Frame (SOF) bit, which is of the dominant state and allows hard synchronization of all nodes. The SOF is followed by the arbitration field, consisting of 12 bits: the 11-bit identifier and the Remote Transmission Request (RTR) bit. The RTR bit is used to distinguish a data frame (RTR bit dominant) from a remote frame (RTR bit recessive).

Following the arbitration field is the control field, consisting of six bits. The first bit of this field is the Identifier Extension (IDE) bit, which must be dominant to specify a standard frame. The following bit, Reserved Bit Zero (RB0), is reserved and is defined as a dominant bit by the CAN protocol. The remaining four bits of the control field are the Data Length Code (DLC) bits, which specify the number of bytes of data (0-8 bytes) contained in the message.

After the control field, is the data field, which contains any data bytes that are being sent, and is of the length defined by the DLC (0-8 bytes).

The Cyclic Redundancy Check (CRC) field follows the data field and is used to detect transmission errors. The CRC field consists of a 15-bit CRC sequence, followed by the recessive CRC Delimiter bit. The final field is the two-bit Acknowledge (ACK) field. During the ACK Slot bit, the transmitting node sends out a recessive bit. Any node that has received an error-free frame Acknowledges the correct reception of the frame by sending back a dominant bit (regardless of whether the node is configured to accept that specific message or not). The recessive Acknowledge delimiter completes the Acknowledge field and may not be overwritten by a dominant bit.

7.2 Extended Data Frame

In the extended CAN data frame, shown in Figure 2-2, the SOF bit is followed by the arbitration field, which consists of 32 bits. The first 11 bits are the Most Significant bits (MSbs) (Base-lD) of the 29-bit identifier. These 11 bits are followed by the Substitute Remote Request (SRR) bit, which is defined to be recessive. The SRR bit is followed by the lDE bit, which is recessive to denote an extended CAN frame.

It should be noted that if arbitration remains unresolved after transmission of the first 11 bits of the identifier, and one of the nodes involved in the arbitration is sending

a standard CAN frame (11-bit identifier), the standard CAN frame will win arbitration due to the assertion of a dominant lDE bit. Also, the SRR bit in an extended CAN frame must be recessive to

allow the assertion of a dominant RTR bit by a node that is sending a standard CAN remote frame. The SRR and IDE bits are followed by the remaining 18 bits of the identifier (Extended ID) and the Remote Transmission Request bit.

To enable standard and extended frames to be sent across a shared network, the 29-bit extended message identifier is split into 11-bit (Most Significant) and 18-bit (Least Significant) sections. This split ensures that the IDE bit can remain at the same bit position in both the standard and extended frames.

Following the arbitration field is the six-bit control field. The first two bits of this field are reserved and must be dominant. The remaining four bits of the control field are the DLC, which specifies the number of data bytes contained in the message.

The remaining portion of the frame (data field, CRC field, Acknowledge field, End-of-Frame and intermission) is constructed in the same way as a standard data frame (see Section 7.1 "Standard Data Frame").

7.3 Remote Frame

Normally, data transmission is performed on an autonomous basis by the data source node (e.g., a sensor sending out a data frame). It is possible, however, for a destination node to request data from the source. To accomplish this, the destination node sends a remote frame with an identifier that matches the identifier of the required data frame. The appropriate data source node will then send a data frame in response to the remote frame request.
There are two differences between a remote frame (shown in Figure 2-3) and a data frame. First, the RTR bit is at the recessive state, and second, there is no data field. In the event of a data frame and a remote frame with the same identifier being transmitted at the same time, the data frame wins arbitration due to the dominant RTR bit following the identifier. In this way, the node that transmitted the remote frame receives the desired data immediately.

7.4 Error Frame

An error frame is generated by any node that detects a bus error. An error frame, shown in Figure 2-4, consists of two fields: an error flag field followed by an error delimiter field. There are two types of error flag fields. The type of error flag field sent depends upon the error status of the node that detects and generates the error flag field.

7.4.1 ACTIVE ERRORS

If an error-active node detects a bus error, the node interrupts transmission of the current message by generating an active error flag. The active error flag is composed of six consecutive dominant bits. This bit sequence actively violates the bit-stuffing rule. All other stations recognize the resulting bit-stuffing error, and in turn, generate error frames themselves, called error echo flags.
The error flag field, therefore, consists of between six and twelve consecutive dominant bits (generated by one or more nodes). The error delimiter field (eight recessive bits) completes the error frame. Upon completion of the error frame, bus activity returns to normal and the interrupted node attempts to resend the aborted message.

> **Note:** Error echo flags typically occur when a localized disturbance causes one or more (but not all) nodes to send an error flag. The remaining nodes generate error flags in response (echo) to the original error flag.

7.4.2 PASSIVE ERRORS

If an error-passive node detects a bus error, the node transmits an error-passive flag followed by the error delimiter field. The error-passive flag consists of six consecutive recessive bits. The error frame for an error- passive node consists of 14 recessive bits. From this, it follows that unless the bus error is detected by an error- active node or the transmitting node, the message will continue transmission because the error-passive flag does not interfere with the bus.

If the transmitting node generates an error-passive flag, it will cause other nodes to generate error frames due to the resulting bit-stuffing violation. After transmission of an error frame, an error-passive node must wait for six consecutive recessive bits on the bus before attempting to rejoin bus communications.

The error delimiter consists of eight recessive bits, and allows the bus nodes to restart bus communications cleanly after an error has occurred.

7.5 Overload Frame

An overload frame, shown in Figure 2-5, has the same format as an active-error frame. An overload frame, however, can only be generated during an interframe space. In this way, an overload frame can be differentiated from an error frame (an error frame is sent during the transmission of a message). The overload frame consists of two fields: an overload flag followed by an overload delimiter. The overload flag consists of six dominant bits followed by overload flags generated by other nodes (and, as for an active error flag, giving a maximum of twelve dominant bits). The overload delimiter consists of eight recessive bits. An overload frame can be generated by a node as a result of two conditions:

1. The node detects a dominant bit during the inter- frame space, an illegal condition. Exception: The dominant bit is detected during the third bit of IFS. In this case, the receivers will interpret this as a SOF.

2. Due to internal conditions, the node is not yet able to begin reception of the next message. A node may generate a maximum of two sequential overload frames to delay the start of the next message.

> **Note:** Case 2 should never occur with the XL2515 due to very short internal delays.

7.6 Interframe Space

The interframe space separates a preceding frame (of any type) from a subsequent data or remote frame. The interframe space is composed of at least three recessive bits, called the ‘Intermission’. This allows nodes time for internal processing before the start of the next message frame. After the intermission, the bus line remains in the recessive state (Bus Idle) until the next transmission starts.

FIGURE 2-1: STANDARD DATA FRAME

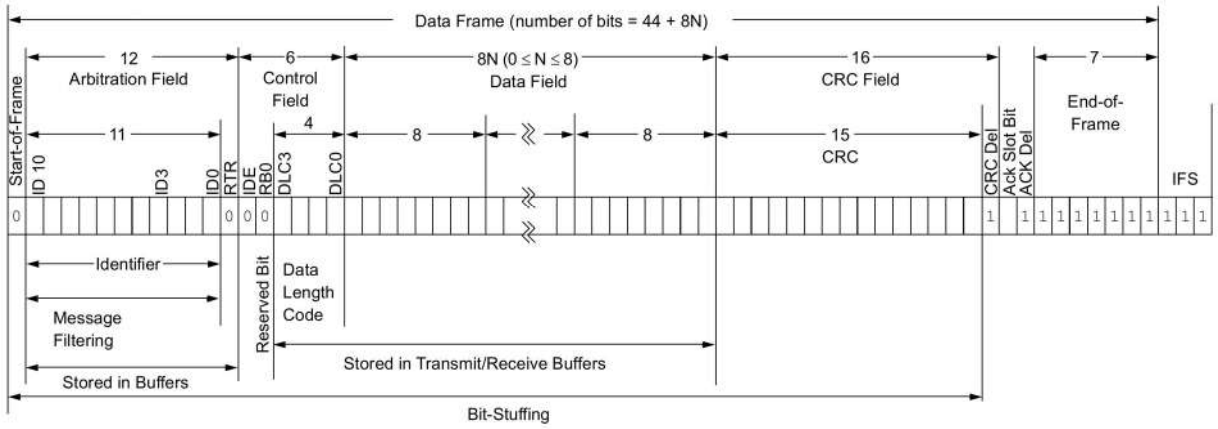

FIGURE 2-2: EXTENDED DATA FRAME

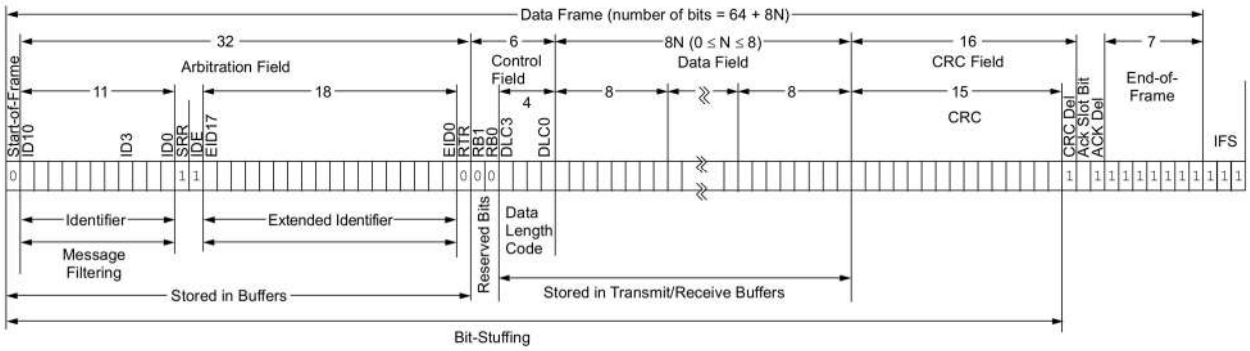

FIGURE 2-3: REMOTE FRAME

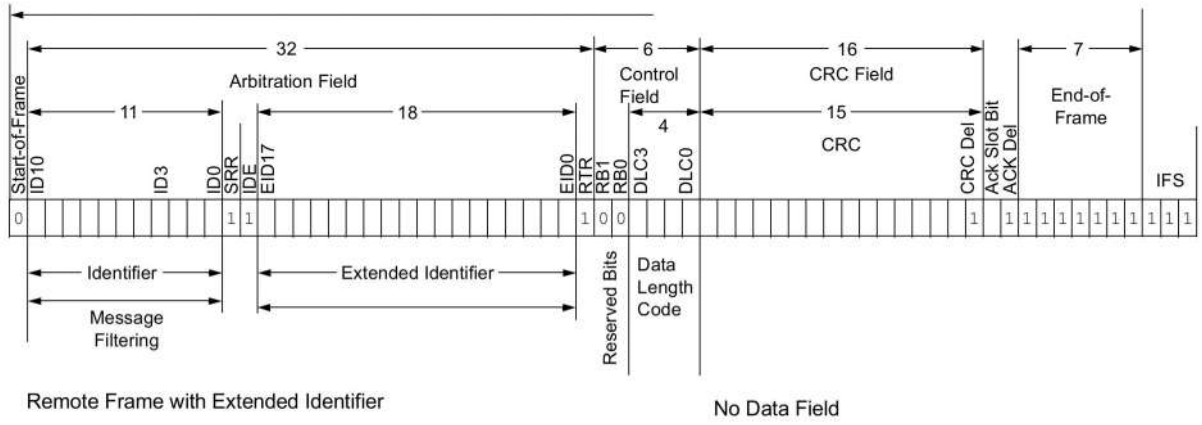

FIGURE 2-4: ACTIVE ERROR FRAME

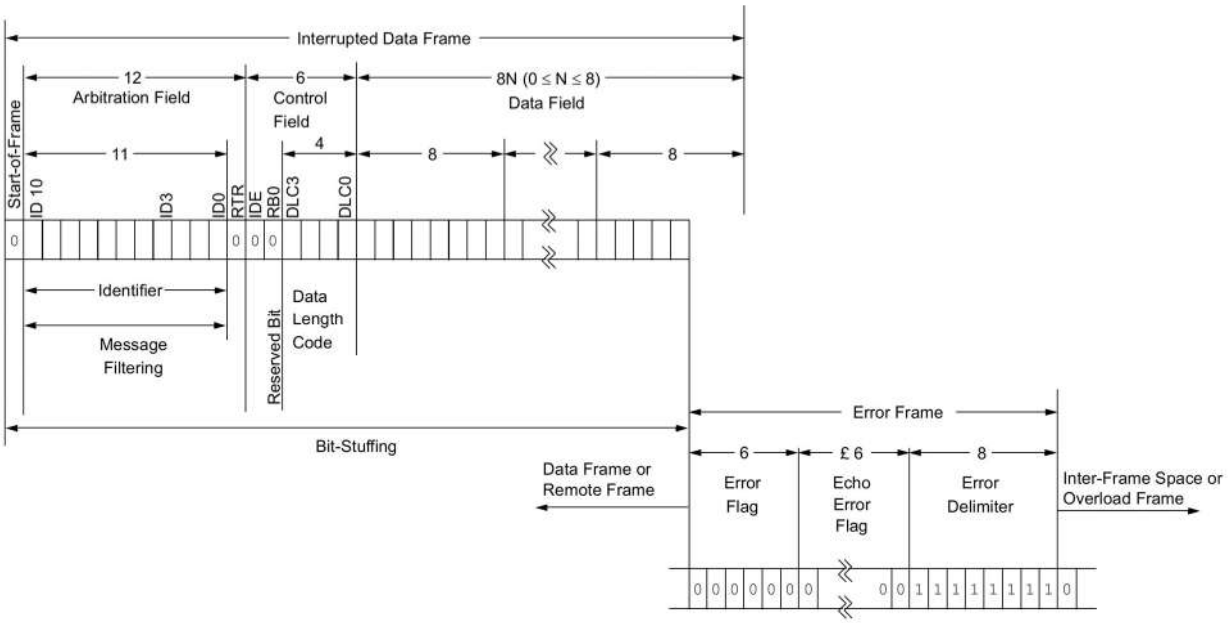

FIGURE 2-5: OVERLOAD FRAME

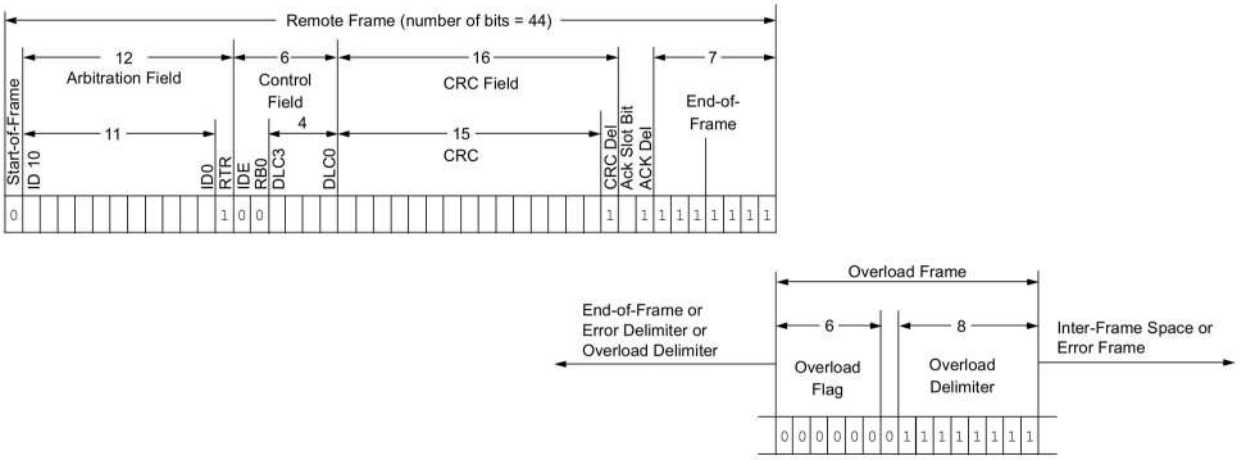

8.MESSAGE TRANSMISSION

8.1 Transmit Buffers

The XL2515 implements three transmit buffers. Each of these buffers occupies 14 bytes of SRAM and are mapped into the device memory map.

The first byte, TXBnCTRL, is a control register associated with the message buffer. The information in this register determines the conditions under which the message will be transmitted and indicates the status of the message transmission (see Register 3-1).

Five bytes are used to hold the Standard and Extended Identifiers, as well as other message arbitration information (see Register 3-3 through Register 3-6). The last eight bytes are for the eight possible data bytes of the message to be transmitted (see Register 3-8).

At a minimum, the TXBnSIDH, TXBnSIDL and TXBnDLC registers must be loaded. If data bytes are present in the message, the TXBnDm registers must also be loaded. If the message is to use Extended Identifiers, the TXBnEIDm registers must also be loaded and the EXIDE (TXBnSIDL[3]) bit set.
Prior to sending the message, the MCU must initialize the TXnIE bit in the CANINTE register to enable or disable the generation of an interrupt when the message is sent.

Note: The TXREQ bit (TXBnCTRL[3]) must be clear (indicating the transmit buffer is not pending transmission) before writing to the transmit buffer.

8.2 Transmit Priority

Transmit priority is a prioritization within the XL2515 of the pending transmittable messages. This is independent from, and not necessarily related to, any prioritization implicit in the message arbitration scheme built into the CAN protocol.

Prior to sending the SOF, the priority of all buffers that are queued for transmission is compared. The transmit buffer with the highest priority will be sent first. For example, if Transmit Buffer 0 has a higher priority setting than Transmit Buffer 1, Transmit Buffer 0 will be sent first.

If two buffers have the same priority setting, the buffer with the highest buffer number will be sent first. For example, if Transmit Buffer 1 has the same priority setting as Transmit Buffer 0, Transmit Buffer 1 will be sent first.

There are four levels of transmit priority. If the TXP[1:0] bits (TXBnCTRL[1:0]) for a particular message buffer are set to ‘11’, that buffer has the highest possible priority. If the TXP[1:0] bits for a particular message buffer are ‘00’, that buffer has the lowest possible priority.

8.3 Initiating Transmission

In order to initiate message transmission, the TXREQ bit (TXBnCTRL[3]) must be set for each buffer to be transmitted. This can be accomplished by:

- Writing to the register via the SPI write command
- Sending the SPI RTS command

- Setting the TXnRTS pin low for the particular transmit buffer(s) that are to be transmitted

If transmission is initiated via the SPI interface, the TXREQ bit can be set at the same time as the TXPx priority bits. When TXREQ is set, the ABTF, MLOA and TXERR bits (TXBnCTRL[5:4]) will be cleared automatically.

> **Note:** Setting the TXREQ bit (TXBnCTRL[3]) does not initiate a message transmission. It merely flags a message buffer as being ready for transmission. Transmission will start when the device detects that the bus is available.

Once the transmission has completed successfully, the TXREQ bit will be cleared, the TXnIF bit (CANINTF) will be set and an interrupt will be generated if the TXnIE bit (CANINTE) is set.
If the message transmission fails, the TXREQ bit will remain set. This indicates that the message is still pending for transmission and one of the following condition flags will be set:

- If the message started to transmit but encountered an error condition, the TXERR (TXBnCTRL[4]) and MERRF bits (CANINTF[7])
will be set, and an interrupt will be generated on the INT pin if the MERRE bit (CANINTE[7]) is set

- If the message is lost, arbitration at the MLOA bit (TXBnCTRL[5]) will be set

> **Note:** If One-Shot mode is enabled (OSM bit (CANCTRL[3])), the above conditions will still exist. However, the TXREQ bit will be cleared and the message will not attempt transmission a second time.

8.4 One-Shot Mode

One-Shot mode ensures that a message will only attempt to transmit one time. Normally, if a CAN message loses arbitration, or is destroyed by an error frame, the message is retransmitted. With One-Shot mode enabled, a message will only attempt to transmit one time, regardless of arbitration loss or error frame.

One-Shot mode is required to maintain time slots in deterministic systems, such as TTCAN.

8.5 $\overline{\text{TXnRTS}}$ Pins

The $\overline{\text{TXnRTS}}$ pins are input pins that can be configured as:

- Request-to-Send inputs, which provide an alternative means of initiating the transmission of a message from any of the transmit buffers
- Standard digital inputs

Configuration and control of these pins is accomplished using the TXRTSCTRL register (see Register 3-2). The TXRTSCTRL register can only be modified when the XL2515 is in Configuration mode (see Section 10.0 “Modes of Operation”). If configured to operate as a Request-to-Send pin, the pin is mapped into the respective TXREQ bit (TXBnCTRL[3]) for the transmit buffer. The TXREQ bit is latched by the falling edge of the $\overline{\text{TXnRTS}}$ pin. The $\overline{\text{TXnRTS}}$ pins are designed to allow them to be tied directly to the $\overline{\text{RXnBF}}$ pins to automatically initiate a message transmission when the $\overline{\text{RXnBF}}$ pin goes low.

The $\overline{\text{TXnRTS}}$ pins have internal pull-up resistors of 100 kΩ (nominal).

8.6 Aborting Transmission

The MCU can request to abort a message in a specific message buffer by clearing the associated TXREQ bit.

In addition, all pending messages can be requested to be aborted by setting the ABAT bit (CANCTRL[4]). This bit MUST be reset (typically after the TXREQ bits have been verified to be cleared) to continue transmitting messages. The ABTF flag (TXBnCTRL[6]) will only be set if the abort was requested via the ABAT bit. Aborting a message by resetting the TXREQ bit does NOT cause the ABTF bit to be set.

Note 1: Messages that were transmitting when the abort was requested will continue to transmit. If the message does not successfully complete transmission (i.e., lost arbitration or was interrupted by an error frame), it will then be aborted.

2: When One-Shot mode is enabled, if the message is interrupted due to an error frame or loss of arbitration, the ABTF bit will set.

FIGURE 3-1: TRANSMIT MESSAGE FLOWCHART

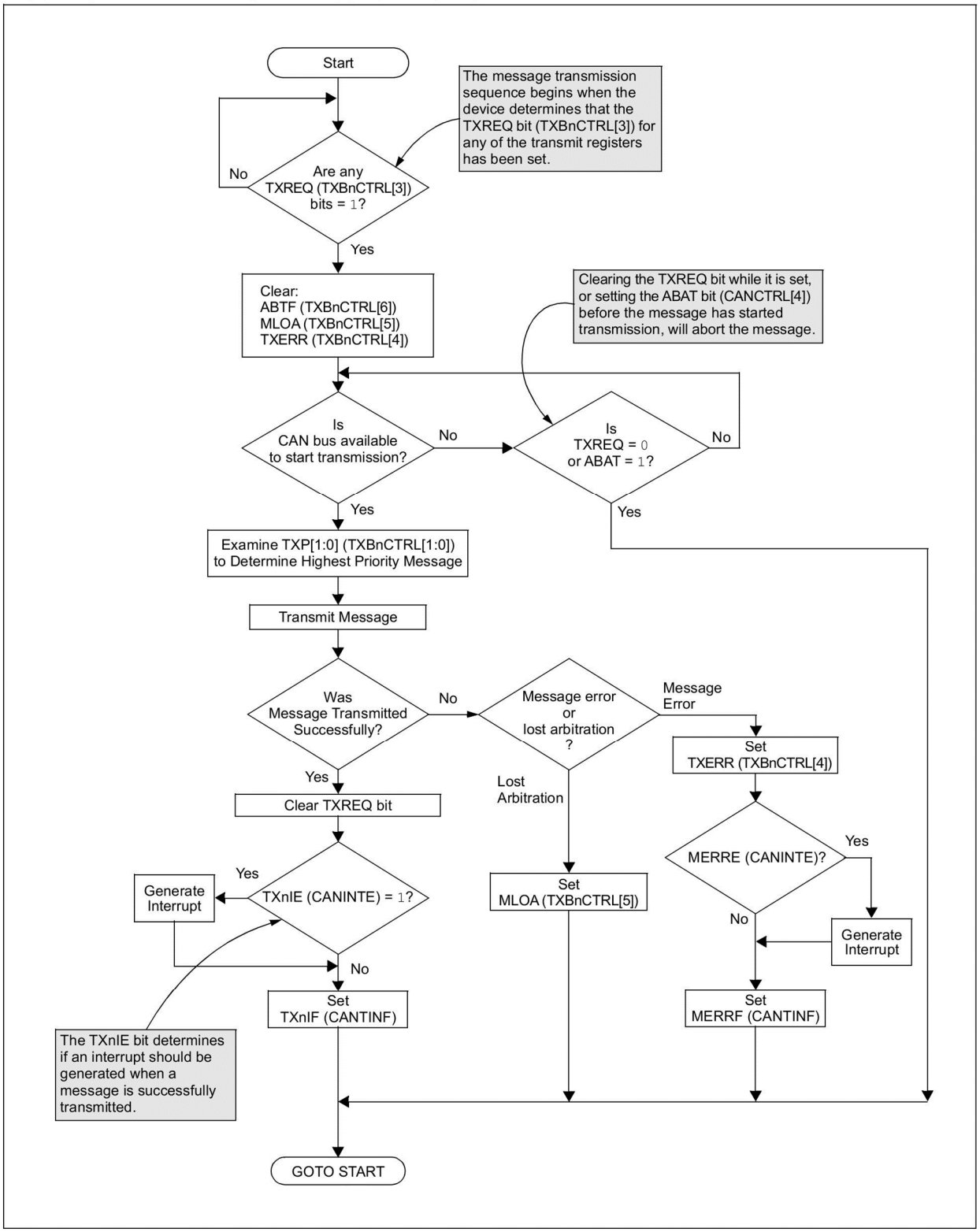

9 . MESSAGE RECEPTION

9.1 Receive Message Buffering

The XL2515 includes two full receive buffers with multiple acceptance filters for each. There is also a separate Message Assembly Buffer (MAB) that acts as a third receive buffer (see Figure 4-2).

9.1.1 MESSAGE ASSEMBLY BUFFER

Of the three receive buffers, the MAB is always committed to receiving the next message from the bus. The MAB assembles all messages received. These messages will be transferred to the RXBn buffers (see Register 4-4 to Register 4-9) only if the acceptance filter criteria is met.

9.1.2 RXB0 AND RXB1

The remaining two receive buffers, called RXB0 and RXB1, can receive a complete message from the protocol engine via the MAB. The MCU can access one buffer, while the other buffer is available for message reception, or for holding a previously received message.

> **Note:** The entire content of the MAB is moved into the receive buffer once a message is accepted. This means, that regardless of the type of identifier (Standard or Extended) and the number of data bytes received, the entire receive buffer is over- written with the MAB contents. Therefore, the contents of all registers in the buffer must be assumed to have been modified when any message is received.

9.1.3 RECEIVE FLAGS/INTERRUPTS

When a message is moved into either of the receive buffers, the appropriate RXnIF bit (CANINTF) is set. This bit must be cleared by the MCU in order to allow a new message to be received into the buffer. This bit provides a positive lockout to ensure that the MCU has finished with the message before the XL2515 attempts to load a new message into the receive buffer.

If the RXnIE bit (CANINTE) is set, an interrupt will be generated on the $\overline{INT}$ pin to indicate that a valid message has been received. In addition, the associated $\overline{RXnBF}$ pin will drive low if configured as a receive buffer full pin. See Section 4.4 “RX0BF and RX1BF Pins” for details.

9.2 Receive Priority

RXB0, the higher priority buffer, has one mask and two message acceptance filters associated with it. The received message is applied to the mask and filters for RXB0 first.
RXB1 is the lower priority buffer, with one mask and four acceptance filters associated with it.
In addition to the message being applied to the RXB0 mask and filters first, the lower number of acceptance filters makes the match on RXB0 more restrictive and implies a higher priority for that buffer.
When a message is received, the RXBnCTRL[3:0] register bits will indicate the acceptance filter number that enabled reception and whether the received message is a Remote Transfer Request.

9.2.1 ROLLOVER

Additionally, the RXB0CTRL register can be configured such that, if RXB0 contains a valid message and another valid message is received, an overflow error will not occur and the new message will be moved into RXB1, regardless of the acceptance criteria of RXB1.

9.2.2 RXM BITS

The RXM[1:0] bits (RXBnCTRL[6:5]) set special Receive modes. Normally, these bits are cleared to '00' to enable reception of all valid messages as deter- mined by the appropriate acceptance filters. In this case, the determination of whether or not to receive standard or extended messages is determined by the EXIDE bit (RFXnSIDL[3]) in the Filter n Standard Identifier Low register.

If the RXM[1:0] bits are set to '11', the buffer will receive all messages, regardless of the values of the acceptance filters. Also, if a message has an error before the EOF, that portion of the message assembled in the MAB, before the error frame, will be loaded into the buffer. This mode has some value in debugging a CAN system and would not be used in an actual system environment. Setting the RXM[1:0] bits to '01' or '10' is not recommended.

9.3 Start-of-Frame Signal

If enabled, the Start-of-Frame signal is generated on the SOF pin at the beginning of each CAN message detected on the RXCAN pin.

The RXCAN pin monitors an Idle bus for a recessive- to-dominant edge. If the dominant condition remains until the sample point, the XL2515 interprets this as a SOF and a SOF pulse is generated. If the dominant condition does not remain until the sample point, the XL2515 interprets this as a glitch on the bus and no SOF signal is generated. Figure 4-1 illustrates SOF signaling and glitch filtering.

As with One-Shot mode, one use for SOF signaling is for TTCAN-type systems. In addition, by monitoring both the RXCAN pin and the SOF pin, an MCU can detect early physical bus problems by detecting small glitches before they affect the CAN communications.

FIGURE 4-1: START-OF-FRAME SIGNALING

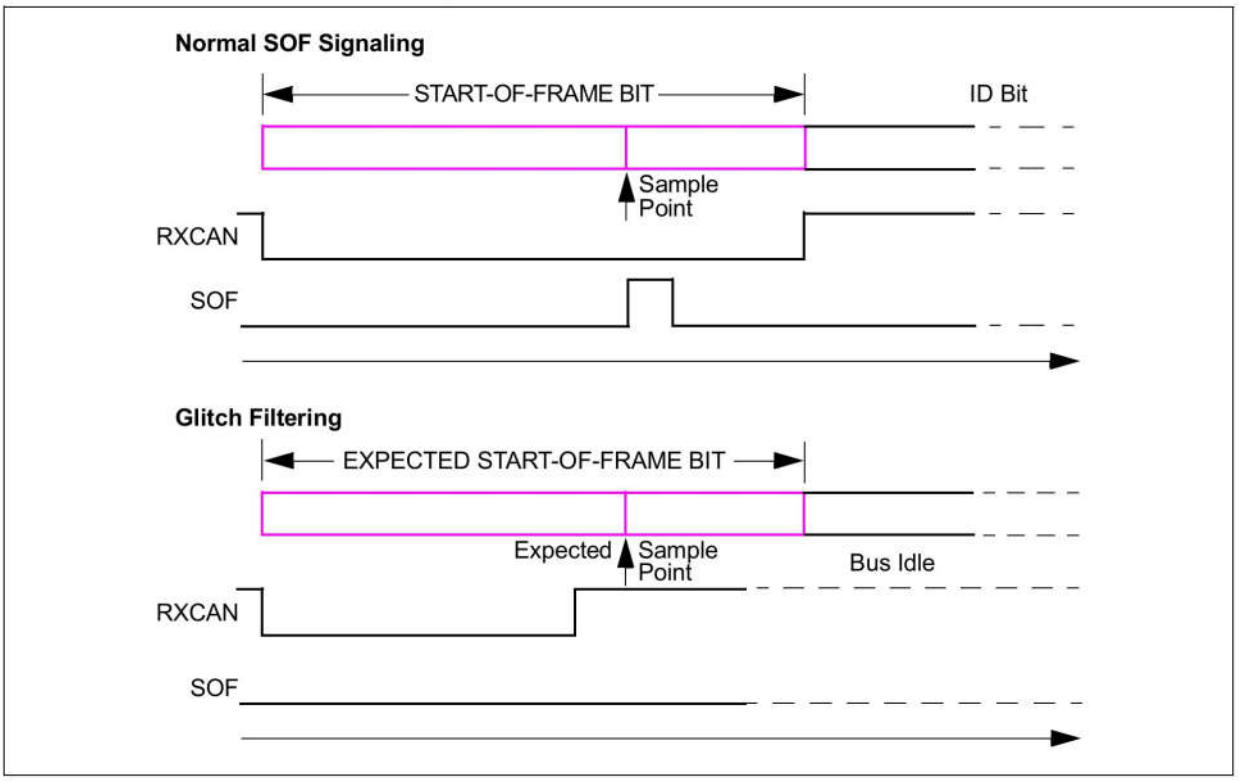

9.4 RX0BF and RX1BF Pins

In addition to the INT pin, which provides an interrupt signal to the MCU for many different conditions, the Receive Buffer Full pins ($\overline{RX0BF}$ and $\overline{RX1BF}$) can be used to indicate that a valid message has been loaded into RXB0 or RXB1, respectively. The pins have three different configurations (Table 4-1):

1. Disabled
2. Buffer Full Interrupt
3. Digital Output

TABLE 4-1: CONFIGURING $\overline{RXnBF}$ PINS

BnBFE	BnBFM	BnBFS	Pin Status
0	X	X	Disabled, high-impedance
1	1	X	Receive buffer interrupt
1	0	0	Digital output = 0
1	0	1	Digital output = 1

9.4.1 DISABLED

The RXnBF pins can be disabled to the high-impedance state by clearing the BnBFE bits (BFPCTRL[3:2]).

9.4.2 CONFIGURED AS BUFFER FULL

The RXnBF pins can be configured to act as either buffer full interrupt pins or as standard digital outputs. Configuration and status of these pins are available via the BFPCTRL register (Register 4-3). When set to operate in Interrupt mode by setting the BnBFE and BnBFM bits (BFPCTRL[3:0]), these pins are active-low and are mapped to the RXnIF bit (CANINTF) for each receive buffer. When this bit goes high for one of the receive buffers (indicating that a valid message has been loaded into the buffer), the corresponding RXnBF pin will go low. When the RXnIF bit is cleared by the MCU, the corresponding interrupt pin will go to the logic high state until the next message is loaded into the receive buffer.

9.4.3 CONFIGURED AS DIGITAL OUTPUT

When used as digital outputs, the BnBFM bits (BFPCTRL[1:0]) must be cleared and the BnBFE bits (BFPCTRL[3:2]) must be set for the associated buffer. In this mode, the state of the pin is controlled by the BnBFS bits (BFPCTRL[5:4]). Writing a '1' to a BnBFS bit will cause a high level to be driven on the associated buffer full pin, while a '0' will cause the pin to drive low. When using the pins in this mode, the state of the pin should be modified only by using the SPI BIT MODIFY command to prevent glitches from occurring on either of the buffer full pins.

FIGURE 4-2: RECEIVE BUFFER BLOCK DIAGRAM

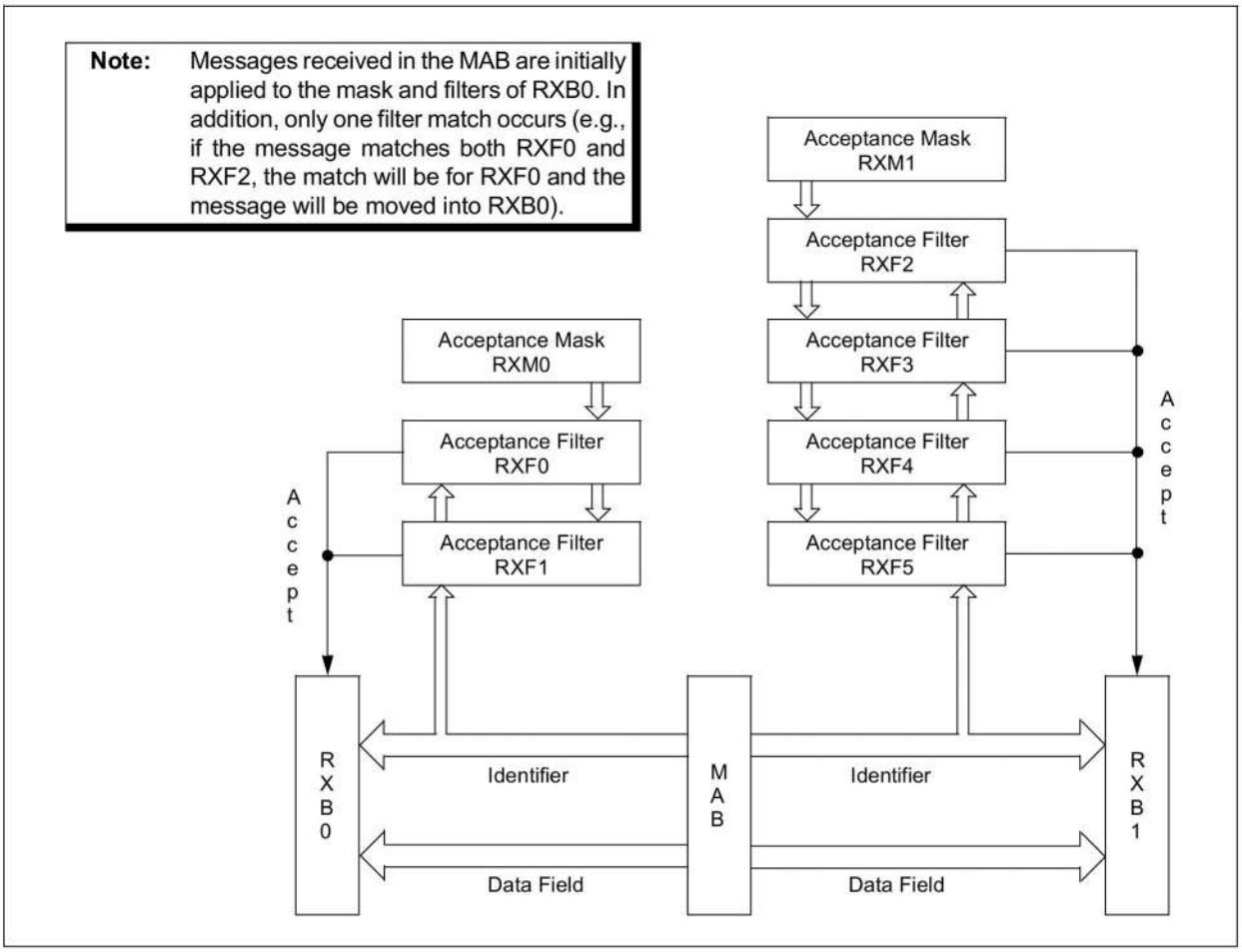

FIGURE 4-3: RECEIVE FLOWCHART

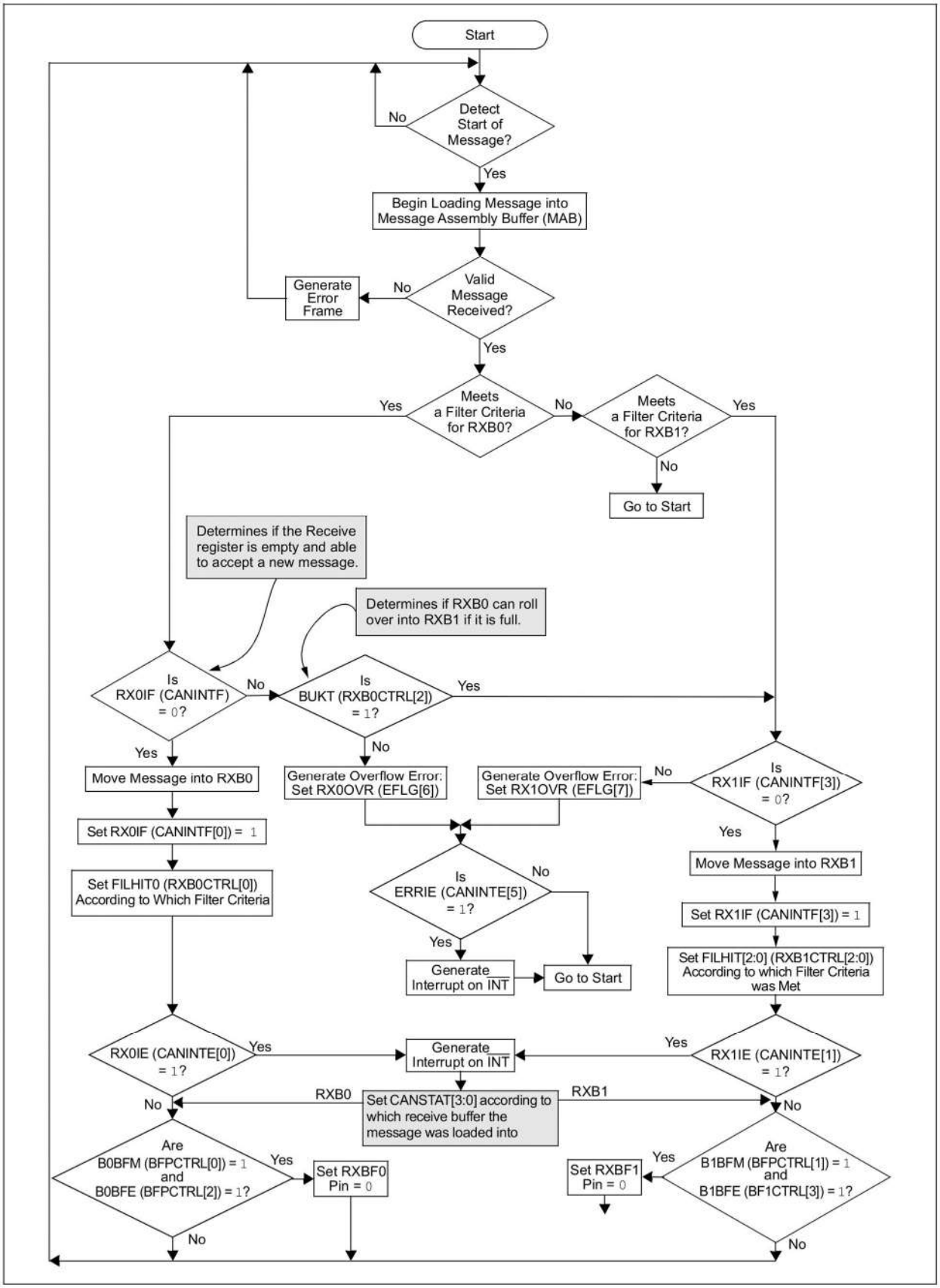

9.5 Message Acceptance Filters and Masks

The message acceptance filters and masks are used to determine if a message in the Message Assembly Buffer should be loaded into either of the receive buffers (see Figure 4-5). Once a valid message has been received into the MAB, the identifier fields of the message are com- pared to the filter values. If there is a match, that message will be loaded into the appropriate receive buffer.

TABLE 4-2: FILTER/MASK TRUTH TABLE

Mask Bit n	Filter Bit n	Message Identifier Bit	Accept or Reject Bit n
0	x	x	Accept
1	0	0	Accept
1	0	1	Reject
1	1	0	Reject
1	1	1	Accept

Note: x = don't care

9.5.1 DATA BYTE FILTERING

When receiving standard data frames (11-bit identifier), the XL2515 automatically applies 16 bits of masks and filters, normally associated with Extended Identifiers, to the first 16 bits of the data field (Data Bytes 0 and 1). Figure 4-4 illustrates how masks and filters apply to extended and standard data frames.
Data byte filtering reduces the load on the MCU when implementing Higher Layer Protocols (HLPs) that filter on the first data byte.

9.5.2 FILTER MATCHING

The filter masks (see Register 4-14 through Register 4-17) are used to determine which bits in the identifier are examined with the filters. A truth table is shown in Table 4-2 that indicates how each bit in the identifier is compared to the masks and filters to deter- mine if the message should be loaded into a receive buffer. The mask essentially determines which bits to apply the acceptance filters to. If any mask bit is set to a zero, that bit will automatically be accepted, regardless of the filter bit.

As shown in the Receive Buffer Block Diagram (Figure 4-2), acceptance filters, RXF0 and RXF1 (and filter mask, RXM0), are associated with RXB0. The filters, RXF2, RXF3, RXF4, RXF5 and mask RXM1, are associated with RXB1.

FIGURE 4-4: MASKS AND FILTERS APPLY TO CAN FRAMES

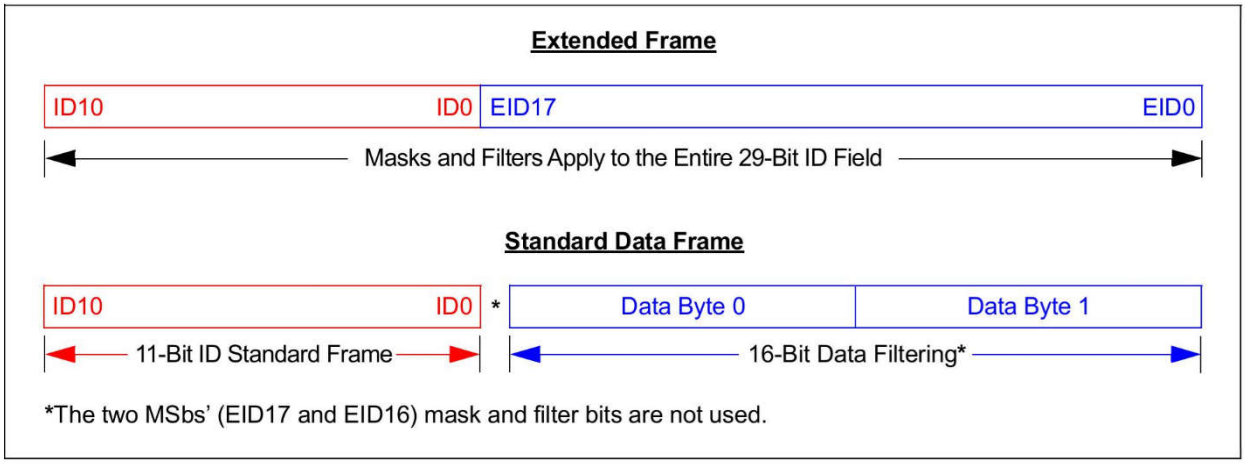

9.5.3 FILHIT BITS

Filter matches on received messages can be determined by the FILHIT bits in the associated RXBnCTRL register; FILHIT0 (RXB0CTRL[0]) for Buffer 0 and FILHIT[2:0] (RXB1CTRL[2:0]) for Buffer 1.
The three FILHITn bits for Receive Buffer 1 (RXB1) are coded as follows:

- 101 = Acceptance Filter 5 (RXF5)
- 100 = Acceptance Filter 4 (RXF4)
- 011 = Acceptance Filter 3 (RXF3)
- 010 = Acceptance Filter 2 (RXF2)
- 001 = Acceptance Filter 1 (RXF1)
- 000 = Acceptance Filter 0 (RXF0)

Note: '000' and '001' can only occur if the BUKT bit in RXB0CTRL is set, allowing RXB0 messages to roll over into RXB1.

RXB0CTRL contains two copies of the BUKT bit and a copy of the FILHIT0 bit.
The coding of the BUKT bit enables these three bits to be used similarly to the FILHIT[2:0] (RXB1CTRL[2:0]) bits and to distinguish a hit on filters, RXF0 and RXF1, in either RXB0 or after a rollover into RXB1.

- 111 = Acceptance Filter 1 (RXB1)
- 110 = Acceptance Filter 0 (RXB1)
- 001 = Acceptance Filter 1 (RXB0)
- 000 = Acceptance Filter 0 (RXB0)

If the BUKT bit is clear, there are six codes corresponding to the six filters. If the BUKT bit is set, there are six codes corresponding to the six filters, plus two additional codes corresponding to the RXF0 and RXF1 filters that roll over into RXB1.

9.5.4 MULTIPLE FILTER MATCHES

If more than one acceptance filter matches, the FILHITn bits will encode the binary value of the lowest numbered filter that matched. For example, if filters, RXF2 and RXF4, match, the FILHITn bits will be loaded with the value for RXF2. This essentially prioritizes the acceptance filters with a lower numbered filter having higher priority. Messages are compared to filters in ascending order of filter number. This also ensures that the message will only be received into one buffer. This implies that RXB0 has a higher priority than RXB1.

9.5.5 CONFIGURING THE MASKS AND FILTERS

The Mask and Filter registers can only be modified when the XL2515 is in Configuration mode (see Section 10.0 "Modes of Operation").

FIGURE 4-5: MESSAGE ACCEPTANCE MASK AND FILTER OPERATION

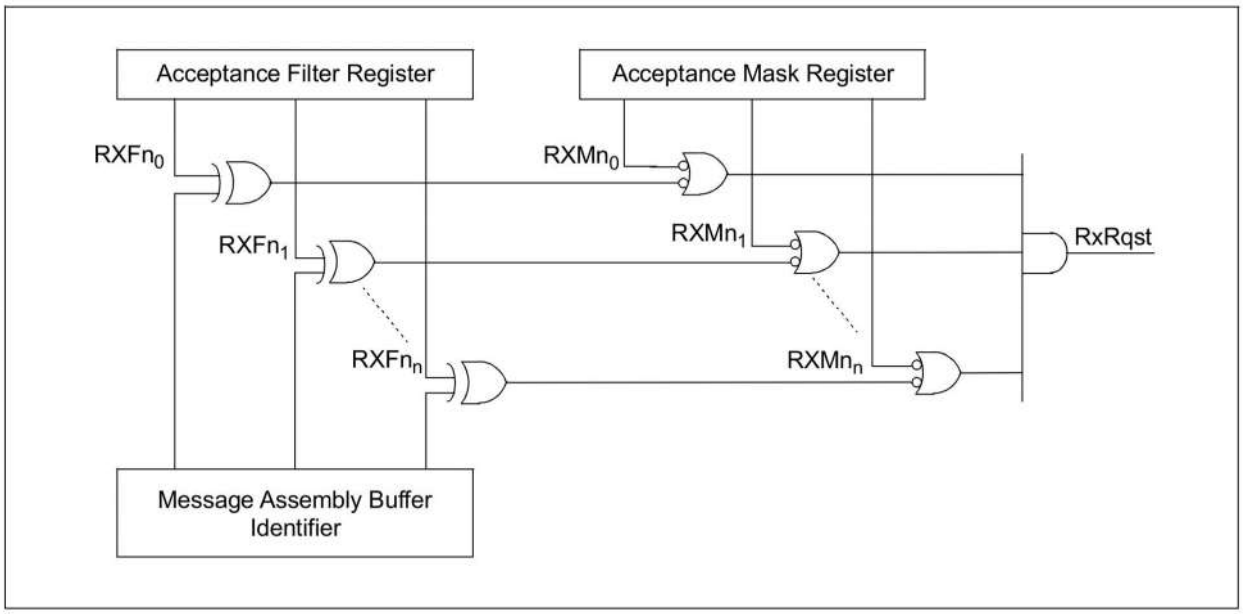

10.BIT TIMING

All nodes on a given CAN bus must have the same Nominal Bit Rate (NBR). The CAN protocol uses Non- Return-to-Zero (NRZ) coding, which does not encode a clock within the data stream. Therefore, the receive clock must be recovered by the receiving nodes and synchronized to the transmitter's clock.

As oscillators and transmission times may vary from node to node, the receiver must have some type of Phase-Locked Loop (PLL) synchronized to data transmission edges to synchronize and maintain the receiver clock. Since the data are NRZ coded, it is necessary to include bit-stuffing to ensure that an edge occurs, at least every six bit times, to maintain the Digital Phase-Locked Loop (DPLL) synchronization.

The bit timing of the XL2515 is implemented using a DPLL that is configured to synchronize to the incoming data, as well as provide the nominal timing for the transmitted data. The DPLL breaks each bit time into multiple segments made up of minimal periods of time, called the Time Quanta (TQ). Bus timing functions executed within the bit time frame (such as synchronization to the local oscillator, network transmission delay compensation and sample point positioning) are defined by the programmable Bit Timing Logic (BTL) of the DPLL.

10.1 The CAN Bit Time

All devices on the CAN bus must use the same bit rate. However, all devices are not required to have the same master oscillator clock frequency. For the different clock frequencies of the individual devices, the bit rate has to be adjusted by appropriately setting the Baud Rate Prescaler and number of Time Quanta in each segment.

The CAN bit time is made up of non-overlapping segments. Each of these segments is made up of integer units, called Time Quanta (TQ), explained later in this data sheet. The Nominal Bit Rate (NBR) is defined in the CAN specification as the number of bits per second, transmitted by an ideal transmitter, with no resynchronization. It can be described with the equation:

EQUATION 5-1:

$$NBR = f_{bit} = \frac{1}{t_{bit}}$$

10.2 Nominal Bit Time

The Nominal Bit Time (NBT) (tbit) is made up of non- overlapping segments (Figure 5-1). Therefore, the NBT is the summation of the following segments:

$$t_{bit} = t_{SyncSeg} + t_{PropSeg} + t_{PS1} + t_{PS2}$$

Associated with the NBT are the sample point, Synchronization Jump Width (SJW) and Information Processing Time (IPT), which are explained later.

10.2.1 SYNCHRONIZATION SEGMENT

The Synchronization Segment (SyncSeg) is the first segment in the NBT and is used to synchronize the nodes on the bus. Bit edges are expected to occur within the SyncSeg. This segment is fixed at 1 TQ.

FIGURE 5-1: CAN BIT TIME SEGMENTS

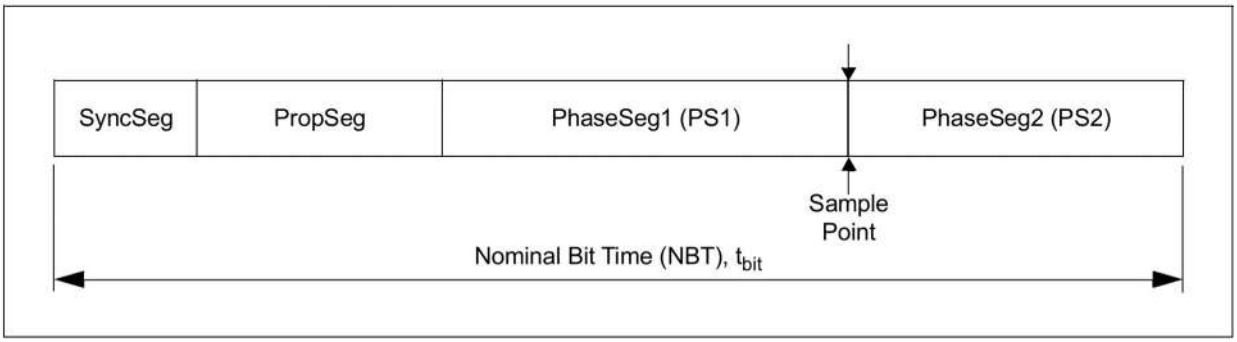

10.2.2 PROPAGATION SEGMENT

The Propagation Segment (PropSeg) exists to compensate for physical delays between nodes. The propagation delay is defined as twice the sum of the signal's propagation time on the bus line, including the delays associated with the bus driver. The PropSeg is programmable from 1-8 TQs.

10.2.3 PHASE SEGMENT 1 (PS1) AND PHASE SEGMENT 2 (PS2)

The two Phase Segments, PS1 and PS2, are used to compensate for edge phase errors on the bus. PS1 can be lengthened (or PS2 shortened) by resynchronization. PS1 is programmable from 1-8 TQs and PS2 is programmable from 2-8 TQs.

10.2.4 SAMPLE POINT

The sample point is the point in the bit time at which the logic level is read and interpreted. The sample point is located at the end of PS1. The exception to this rule is if the Sample mode is configured to sample three times per bit. In this case, while the bit is still sampled at the end of PS1, two additional samples are taken at one- half TQ intervals prior to the end of PS1, with the value of the bit being determined by a majority decision.

10.2.5 INFORMATION PROCESSING TIME

The Information Processing Time (IPT) is the time required for the logic to determine the bit level of a sampled bit. The IPT begins at the sample point, is measured in TQ and is fixed at 2 TQs for the Microchip CAN module. Since PS2 also begins at the sample point and is the last segment in the bit time, it is required that the PS2 minimum is not less than the IPT.

Therefore:

$$PS2_{min} = IPT = 2\ T_QS$$

10.2.6 SYNCHRONIZATION JUMP WIDTH

The Synchronization Jump Width (SJW) adjusts the bit clock, as necessary, by 1-4 TQs (as configured) to maintain synchronization with the transmitted message. Synchronization is covered in more detail later in this data sheet.

10.3 Time Quantum

Each of the segments that make up a bit time are made up of integer units, called Time Quanta (TQ). The length of each Time Quantum is based on the oscillator period(TOSC). The base TQ equals twice the oscillator period. Figure 5-2 shows how the bit period is derived from TOSC and TQ. The TQ length equals one TQ clock period (tBRPCLK), which is programmable using a programmable prescaler, called the Baud Rate Prescaler (BRP). This is illustrated in the following equation:

EQUATION 5-2:

$$T_Q = 2 \bullet BRP \bullet T_{OSC} = \frac{2 \bullet BRP}{F_{OSC}}$$

Where: BRP equals the configuration as shown in Register 5-1.

FIGURE 5-2: TQ AND THE BIT PERIOD

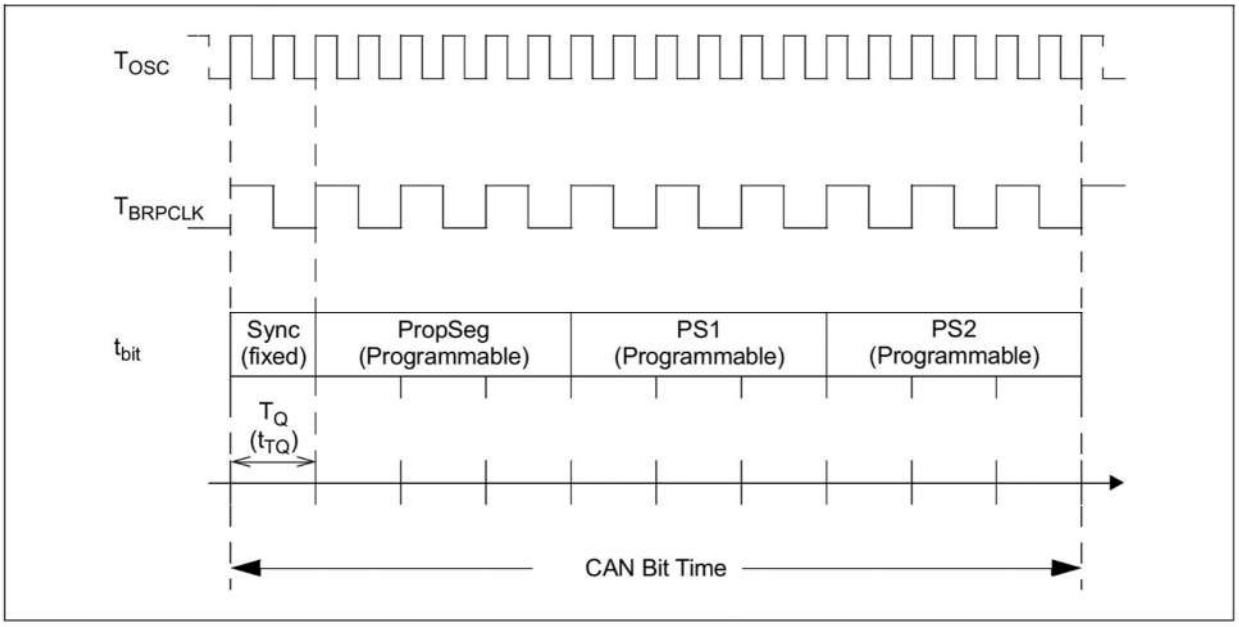

10.4 Synchronization

To compensate for phase shifts between the oscillator frequencies of each of the nodes on the bus, each CAN controller must be able to synchronize to the relevant signal edge of the incoming signal. Synchronization is the process by which the DPLL function is implemented.
When an edge in the transmitted data is detected, the logic will compare the location of the edge to the expected time (SyncSeg). The circuit will then adjust the values of PS1 and PS2 as necessary.

There are two mechanisms used for synchronization:
1. Hard synchronization
2. Resynchronization

10.4.1 HARD SYNCHRONIZATION

Hard synchronization is only performed when there is a recessive-to-dominant edge during a Bus Idle condition, indicating the start of a message. After hard synchronization, the bit time counters are restarted with SyncSeg. Hard synchronization forces the edge that has occurred to lie within the Synchronization Segment of the restarted bit time. Due to the rules of synchronization, if a hard synchronization occurs, there will not be a resynchronization within that bit time.

10.4.2 RESYNCHRONIZATION

As a result of resynchronization, PS1 may be lengthened or PS2 may be shortened. The amount of lengthening or shortening of the Phase Buffer Segments has an upper bound, given by the Synchronization Jump Width (SJW).
The value of the SJW will be added to PS1 or subtracted from PS2 (see Figure 5-3). The SJW represents the loop filtering of the DPLL. The SJW is programmable between 1 TQ and 4 TQs.

10.4.2.1 Phase Errors

The NRZ bit coding method does not encode a clock into the message. Clocking information will only be derived from recessive-to-dominant transitions. The property which states that only a fixed maximum number of successive bits have the same value (bit- stuffing) ensures resynchronization to the bit stream during a frame.

The phase error of an edge is given by the position of the edge relative to SyncSeg, measured in TQ. The phase error is defined in a magnitude of TQ as follows:

- e = 0 if the edge lies within SyncSeg
- e > 0 if the edge lies before the sample point (TQ is added to PS1)
- e < 0 if the edge lies after the sample point of the previous bit (TQ is subtracted from PS2)

10.4.2.2 No Phase Error (e = 0)

If the magnitude of the phase error is less than or equal to the programmed value of the SJW, the effect of a resynchronization is the same as that of a hard synchronization.

10.4.2.3 Positive Phase Error (e > 0)

If the magnitude of the phase error is larger than the SJW, and if the phase error is positive, PS1 is lengthened by an amount equal to the SJW.

10.4.2.4 Negative Phase Error (e < 0)

If the magnitude of the phase error is larger than the resynchronization jump width, and the phase error is negative, PS2 is shortened by an amount equal to the SJW.

10.4.3 SYNCHRONIZATION RULES

1. Only recessive-to-dominant edges will be used for synchronization.
2. Only one synchronization within one bit time is allowed.
3. An edge will be used for synchronization only if the value detected at the previous sample point (previously read bus value) differs from the bus value immediately after the edge.
4. A transmitting node will not resynchronize on a positive phase error (e > 0).
5. If the absolute magnitude of the phase error is greater than the SJW, the appropriate Phase Segment will adjust by an amount equal to the SJW.

FIGURE 5-3: SYNCHRONIZING THE BIT TIME

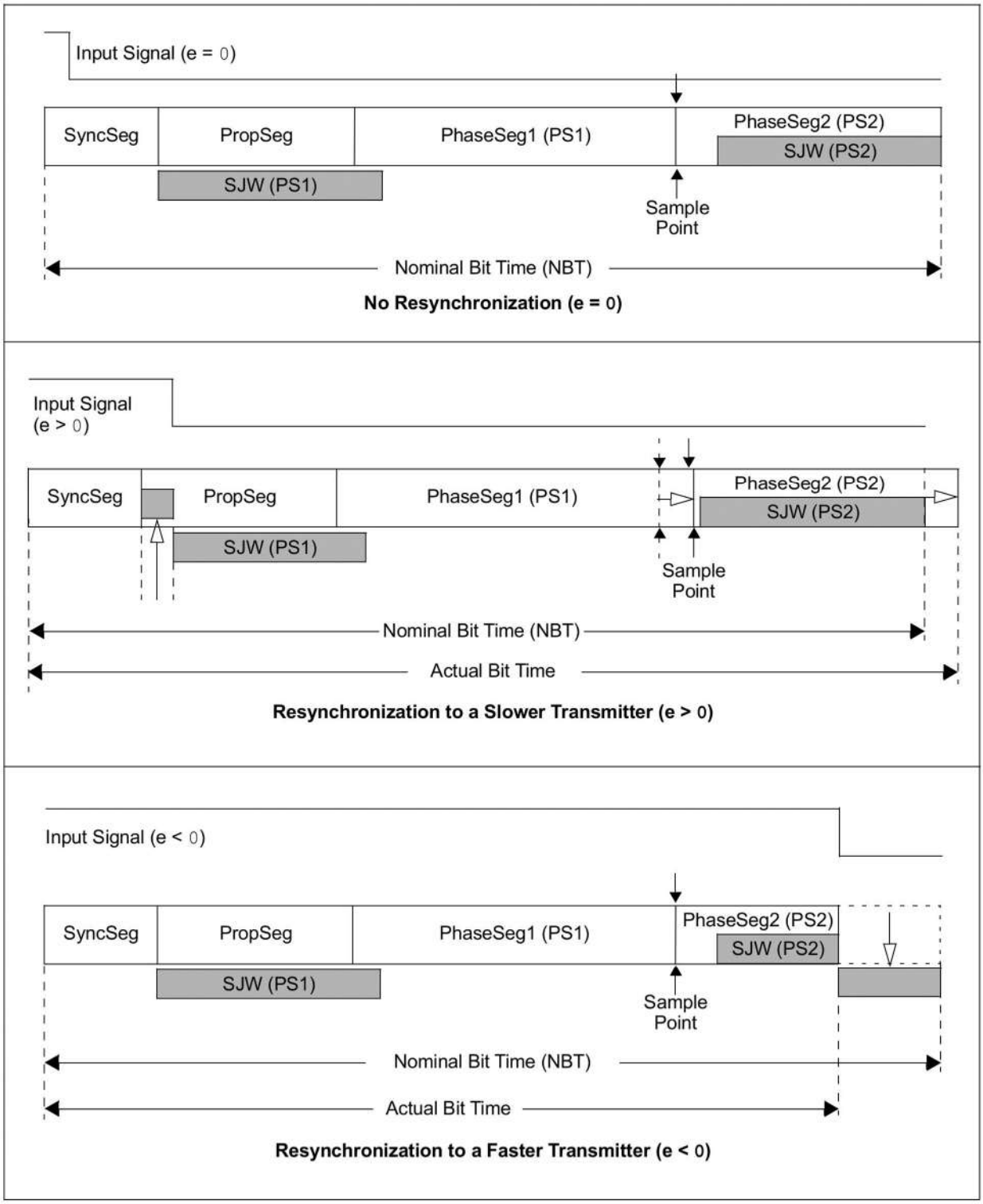

10.5 Programming Time Segments

Some requirements for programming of the Time Segments:

- PropSeg + PS1 ⩾ PS2
- PropSeg + PS1 ⩾ TDELAY
- PS2 ⩾ SJW

For example, assuming that a 125 kHz CAN baud rate with FOSC = 20 MHz is desired:
TOSC = 50 ns, choose BRP[5:0] = 04h, then TQ = 500 ns. To obtain 125 kHz, the bit time must be 16 TQs. Typically, the sampling of the bit should take place at about 60-70% of the bit time, depending on the system parameters. Also, typically, the TDELAY is 1-2 TQs.

SyncSeg = 1 TQ and PropSeg = 2 TQs. So setting PS1 = 7 TQs would place the sample at 10 TQs after the transition. This would leave 6 TQs for PS2.

Since PS2 is 6, according to the rules, SJW could be a maximum of 4 TQs. However, a large SJW is typically only necessary when the clock generation of the different nodes is inaccurate or unstable, such as using ceramic resonators. So a SJW of 1 is usually enough.

10.6 Oscillator Tolerance

The bit timing requirements allow ceramic resonators to be used in applications with transmission rates of up to 125 kbit/sec as a rule of thumb. For the full bus speed range of the CAN protocol, a quartz oscillator is required. A maximum node-to-node oscillator variation of 1.7% is allowed.

10.7 Bit Timing Configuration Registers

The Configuration registers (CNF1, CNF2, CNF3) control the bit timing for the CAN bus interface. These registers can only be modified when the XL2515 is in Configuration mode (see Section 10.0 “Modes of Operation”).

10.7.1 CNF1

The BRP[5:0] bits control the Baud Rate Prescaler. These bits set the length of TQ relative to the OSC1 input frequency, with the minimum TQ length being 2 TOSC (when BRP[5:0] = b000000). The SJW[1:0] bits select the SJW in terms of number of TQs.

10.7.2 CNF2

The PRSEG[2:0] bits set the length (in TQs) of the Propagation Segment. The PHSEG1[2:0] bits set the length (in TQs) of PS1. The SAM bit controls how many times the RXCAN pin is sampled. Setting this bit to a ‘1’ causes the bus to be sampled three times: twice at TQ/2 before the sample point and once at the normal sample point (which is at the end of PS1). The value of the bus is determined to be the majority sampled. If the SAM bit is set to a ‘0’, the RXCAN pin is sampled only once at the sample point.

The BTLMODE bit controls how the length of PS2 is determined. If this bit is set to a ‘1’, the length of PS2 is determined by the PHSEG2[2:0] bits of CNF3 (see Section 5.7.3 “CNF3”). If the BTLMODE bit is set to a ‘0’, the length of PS2 is greater than that of PS1 and the Information Processing Time (which is fixed at 2 TQs for the XL2515).

10.7.3 CNF3

The PHSEG2[2:0] bits set the length (in TQs) of PS2 if the BTLMODE bit (CNF2[7]) is set to a ‘1’. If the BTLMODE bit is set to a ‘0’, the PHSEG2[2:0] bits have no effect.

11.ERROR DETECTION

The CAN protocol provides sophisticated error detection mechanisms. The following errors can be detected.

11.1 CRC Error

With the Cyclic Redundancy Check (CRC), the transmitter calculates special check bits for the bit sequence from the Start-of-Frame until the end of the data field. This CRC sequence is transmitted in the CRC field. The receiving node also calculates the CRC sequence using the same formula and performs a com- parison to the received sequence. If a mismatch is detected, a CRC error has occurred and an error frame is generated. The message is repeated.

11.2 Acknowledge Error

In the Acknowledge field of a message, the transmitter checks if the Acknowledge Slot bit (which has been sent out as a recessive bit) contains a dominant bit. If not, no other node has received the frame correctly. An Acknowledge error has occurred, an error frame is generated and the message will have to be repeated.

11.3 Form Error

If a node detects a dominant bit in one of the four segments (including End-of-Frame, interframe space, Acknowledge delimiter or CRC delimiter), a form error has occurred and an error frame is generated. The message is repeated.

11.4 Bit Error

A bit error occurs if a transmitter detects the opposite bit level to what it transmitted (i.e., transmitted a dominant and detected a recessive, or transmitted a recessive and detected a dominant).
Exception: In the case where the transmitter sends a recessive bit, and a dominant bit is detected during the arbitration field and the Acknowledge Slot, no bit error is generated because normal arbitration is occurring.

11.5 Stuff Error

lf, between the Start-of-Frame and the CRC delimiter, six consecutive bits with the same polarity are detected, the bit-stuffing rule has been violated. A stuff error occurs and an error frame is generated. The message is repeated.

11.6 Error States

Detected errors are made known to all other nodes via error frames. The transmission of the erroneous mes- sage is aborted and the frame is repeated as soon as possible. Furthermore, each CAN node is in one of the three error states according to the value of the internal error counters:

1. Error-active.
2. Error-passive.
3. Bus-off (transmitter only).

The error-active state is the usual state where the node can transmit messages and active error frames (made of dominant bits) without any restrictions. In the error-passive state, messages and passive error frames (made of recessive bits) may be transmitted. The bus-off state makes it temporarily impossible for the station to participate in the bus communication. During this state, messages can neither be received or transmitted. Only transmitters can go bus-off.

11.7 Error Modes and Error Counters

The XL2515 contains two error counters: the Receive Error Counter (REC) (see Register 6-2) and the Transmit Error Counter (TEC) (see Register 6-1). The values of both counters can be read by the MCU. These counters are incremented/decremented in accordance with the CAN bus specification.

The XL2515 is error-active if both error counters are below the error-passive limit of 128. It is error-passive if at least one of the error counters equals or exceeds 128. It goes to bus-off if the TEC exceeds the bus-off limit of 255. The device remains in this state until the bus-off recovery sequence is received. The bus-off recovery sequence consists of 128 occurrences of 11 consecutive recessive bits (see Figure 6-1).

Note: The XL2515, after going bus-off, will recover back to error-active without any intervention by the MCU if the bus remains idle for 128 x 11 bit times. If this is not desired, the error Interrupt Service Routine (ISR) should address this.

The current Error mode of the XL2515 can be read by the MCU via the EFLG register (see Register 6-3). Additionally, there is an error state warning flag bit, EWARN (EFLG[0]), which is set if at least one of the error counters equals or exceeds the error warning limit of 96. EWARN is reset if both error counters are less than the error warning limit.

FIGURE 6-1: ERROR MODES STATE DIAGRAM

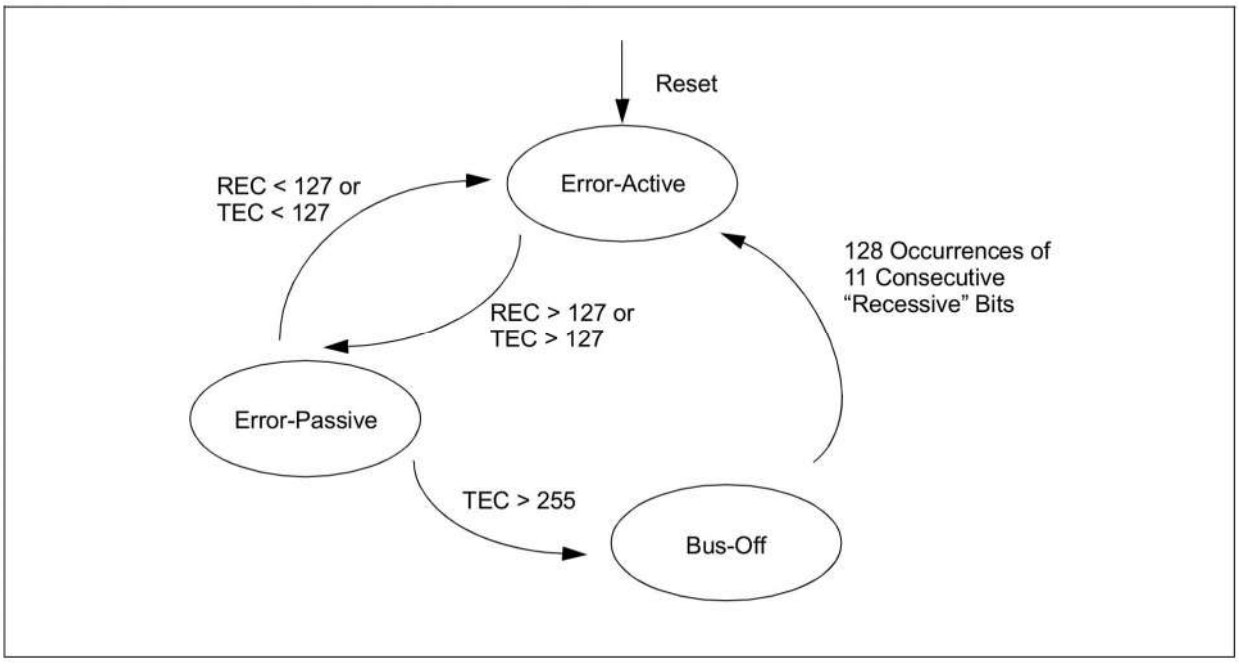

12.INTERRUPTS

The XL2515 has eight sources of interrupts. The CANINTE register contains the individual interrupt enable bits for each interrupt source. The CANINTF register contains the corresponding interrupt flag bit for each interrupt source. When an interrupt occurs, the INT pin is driven low by the XL2515 and will remain low until the interrupt is cleared by the MCU. An interrupt can not be cleared if the respective condition still prevails. It is recommended that the BIT MODIFY command be used to reset flag bits in the CANINTF register rather than normal write operations. This is done to prevent unintentionally changing a flag that changes during the WRITE command, potentially causing an interrupt to be missed.

It should be noted that the CANINTF flags are read/write and an interrupt can be generated by the MCU setting any of these bits, provided the associated CANINTE bit is also set.

12.1 Interrupt Code Bits

The source of a pending interrupt is indicated in the Interrupt Code bits, ICOD[2:0] (CANSTAT[3:1]), as shown in Register 10-2. In the event that multiple interrupts occur, the INT pin will remain low until all interrupts have been reset by the MCU. The ICOD[2:0] bits will reflect the code for the highest priority interrupt that is currently pending. Interrupts are internally prioritized, such that the lower the ICODn bits value, the higher the interrupt priority. Once the highest priority interrupt condition has been cleared, the code for the next highest priority interrupt that is pending (if any) will be reflected by the ICODn bits (see Table 7-1). Only those interrupt sources that have their associated CANINTE enable bit set will be reflected in the ICODn bits.

TABLE 7-1: ICOD[2:0] DECODE

ICOD[2:0]	Boolean Expression
000	$\overline{ERR}$•$\overline{WAK}$•$\overline{TX0}$•$\overline{TX1}$•$\overline{TX2}$•$\overline{RX0}$•$\overline{RX1}$
001	ERR
010	$\overline{ERR}$•WAK
011	$\overline{ERR}$•$\overline{WAK}$•TX0
100	$\overline{ERR}$•$\overline{WAK}$•$\overline{TX0}$•TX1
101	$\overline{ERR}$•$\overline{WAK}$•$\overline{TX0}$•$\overline{TX1}$•TX2
110	$\overline{ERR}$•$\overline{WAK}$•$\overline{TX0}$•$\overline{TX1}$•$\overline{TX2}$•RX0
111	$\overline{ERR}$•$\overline{WAK}$•$\overline{TX0}$•$\overline{TX1}$•$\overline{TX2}$•$\overline{RX0}$•RX1

Note: $\overline{ERR}$ is associated with the ERRIE bit (CANINTE[5]).

12.2 Transmit Interrupt

When the Transmit Interrupt is enabled, TXnIE (CANINTE) = 1, an interrupt will be generated on the INT pin once the associated transmit buffer becomes empty and is ready to be loaded with a new message. The TXnIF bit (CANINTF) will be set to indicate the source of the interrupt. The interrupt is cleared by clearing the TXnIF bit.

12.3 Receive Interrupt

When the Receive Interrupt is enabled, RXnIE (CANINTE) = 1, an interrupt will be generated on the INT pin once a message has been successfully received and loaded into the associated receive buffer. This interrupt is activated immediately after receiving the EOF field. The RXnIF bit (CANINTF) will be set to indicate the source of the interrupt. The interrupt is cleared by clearing the RXnIF bit.

12.4 Message Error Interrupt

When an error occurs during the transmission or reception of a message, the Message Error Flag, MERRF (CANINTF[7]), will be set, and if the MERRE bit (CANINTE[7]) is set, an interrupt will be generated on the INT pin. This is intended to be used to facilitate baud rate determination when used in conjunction with Listen-Only mode.

12.5 Bus Activity Wake-up Interrupt

When the XL2515 is in Sleep mode and the bus activity wake-up interrupt is enabled (WAKIE (CANINTE[6]) = 1), an interrupt will be generated on the INT pin and the WAKIF bit (CANINTF[6]) will be set when activity is detected on the CAN bus. This interrupt causes the XL2515 to exit Sleep mode. The interrupt is reset by clearing the WAKIF bit.

Note:	The XL2515 wakes up into Listen-Only mode.

12.6 Error Interrupt

When the error interrupt is enabled (ERRIE (CANINTE[5]) = 1), an interrupt is generated on the INT pin if an overflow condition occurs, or if the error state of the transmitter or receiver has changed. The Error Flag (EFLG) register will indicate one of the following conditions.

12.6.1 RECEIVER OVERFLOW

An overflow condition occurs when the MAB has assembled a valid receive message (the message meets the criteria of the acceptance filters) and the receive buffer associated with the filter is not available for loading of a new message. The associated RXnOVR bit (EFLG) will be set to indicate the overflow condition. This bit must be cleared by the MCU.

12.6.2 RECEIVER WARNING

The REC has reached the MCU warning limit of 96.

12.6.3 TRANSMITTER WARNING

The TEC has reached the MCU warning limit of 96.

12.6.4 RECEIVER ERROR-PASSIVE

The REC has exceeded the error-passive limit of 127 and the device has gone to the error-passive state.

12.6.5 TRANSMITTER ERROR-PASSIVE

The TEC has exceeded the error-passive limit of 127 and the device has gone to the error-passive state.

12.6.6 BUS-OFF

The TEC has exceeded 255 and the device has gone to the bus-off state.

12.7 Interrupt Acknowledge

Interrupts are directly associated with one or more status flags in the CANINTF register. Interrupts are pending as long as one of the flags is set. Once an interrupt flag is set by the device, the flag can not be reset by the MCU until the interrupt condition is removed.

13.OSCILLATOR

The XL2515 is designed to operate with a crystal or ceramic resonator connected to the OSC1 and OSC2 pins. The XL2515 oscillator design requires the use of a parallel cut crystal. Use of a series cut crystal may give a frequency out of the crystal manufacturer's specifications. A typical oscillator circuit is shown in Figure 8-1. The XL2515 may also be driven by an external clock source connected to the OSC1 pin, as shown in Figure 8-2 and Figure 8-3.

FIGURE 8-1: CRYSTAL/CERAMIC RESONATOR OPERATION

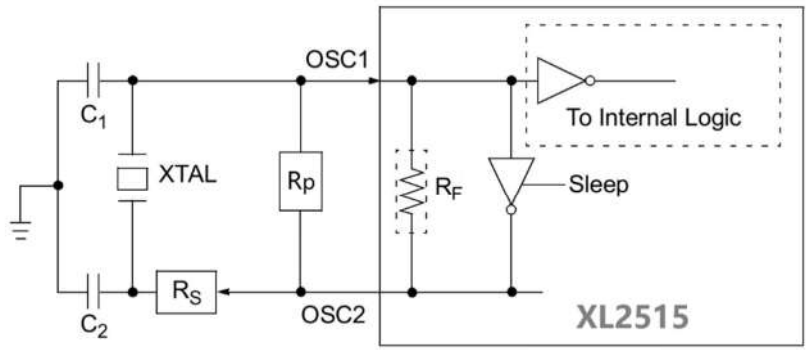

Note :

1: Since each resonator/crystal has its own characteristics, the user should consult the resonator/crystal manufacturer for appropriate values of external components (C1, C2 and Rp)
2: RS may be required to avoid overdriving crystals with a low drive level specification.
3: A Series Resistor (RS) may be required for AT strip cut crystals.
4: The Feedback Resistor (RF) is typically in the range of 2 to 10 MΩ
5: While higher capacitance increases the stability of the oscillator, it also increases the start-up time.
6: Always verify oscillator performance over the VDD and temperature range that is expected for the application.

13.1 Oscillator Start-up Timer

The XL2515 utilizes an Oscillator Start-up Timer (OST) that holds the XL2515 in Reset to ensure that the oscillator has stabilized before the internal state machine begins to operate. The OST keeps the device in a Reset state for 128 OSC1 clock cycles after the occurrence of a Power-on Reset, SPI Reset, after the assertion of the RESET pin and after a wake-up from Sleep mode. It should be noted that no SPI protocol operations should be attempted until after the OST has expired.

13.2 CLKOUT Pin

The CLKOUT pin is provided to the system designer for use as the main system clock or as a clock input for other devices in the system. The CLKOUT has an internal prescaler which can divide FOSC by 1, 2, 4 and 8. The CLKOUT function is enabled and the prescaler is selected via the CANCTRL register (see Register 10-1).

Note:	The maximum frequency on CLKOUT is specified as 25 MHz (See Table 13-5).

The CLKOUT pin will be active upon system Reset and default to the slowest speed (divide-by-8) so that it can be used as the MCU clock. When Sleep mode is requested, the XL2515 will drive sixteen additional clock cycles on the CLKOUT pin before entering Sleep mode. The Idle state of the CLKOUT pin in Sleep mode is low.

When the CLKOUT function is disabled (CLKEN (CANCTRL[2]) = 0), the CLKOUT pin is in a high-impedance state. The CLKOUT function is designed to ensure that thCLKOUT and tlCLKOUT timings are preserved when the CLKOUT pin function is enabled, disabled or the prescaler value is changed.

FIGURE 8-2: EXTERNAL CLOCK SOURCE

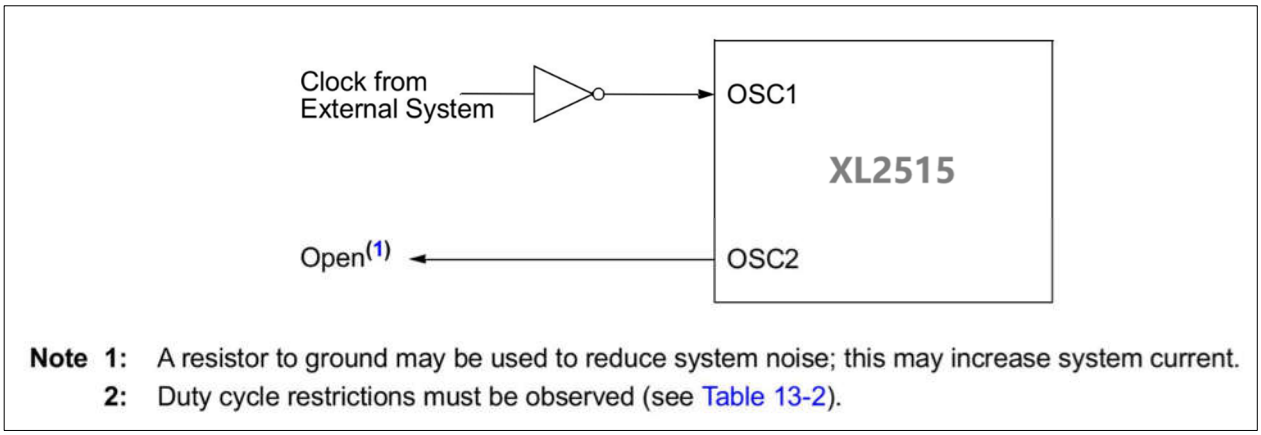

Note 1: A resistor to ground may be used to reduce system noise; this may increase system current.
2: Duty cycle restrictions must be observed (see Table 13-2).

FIGURE 8-3: USING ACO (ACTIVE CRYSTAL OSCILLATOR) AS THE CLOCK SOURCE

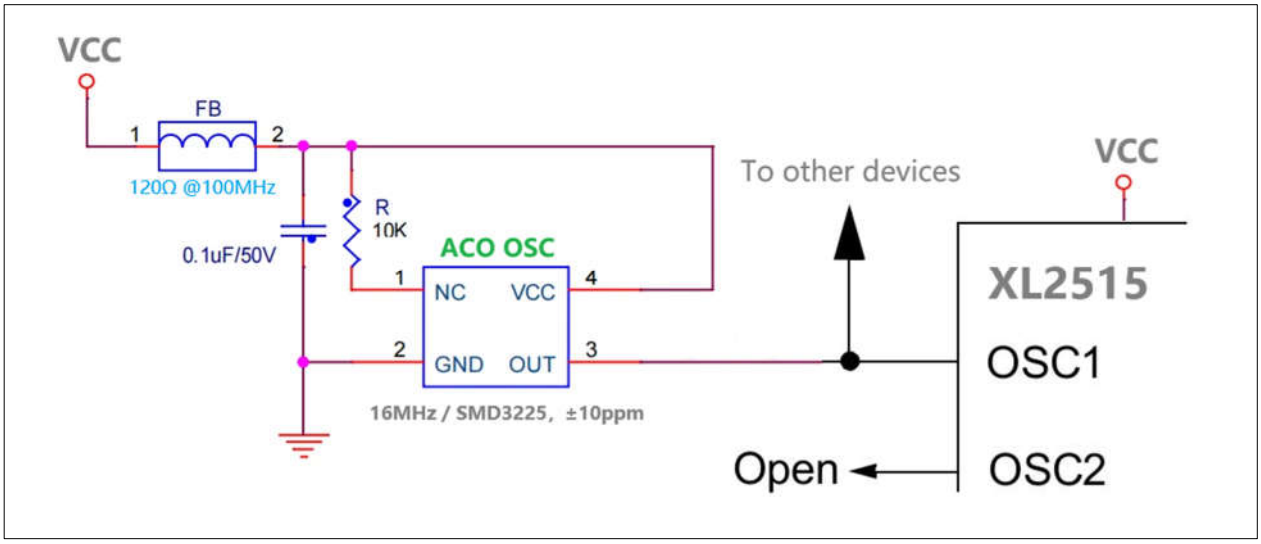

14.RESET

The XL2515 differentiates between two kinds of Resets:

1. Hardware Reset – Low on RESET pin.
2. SPI Reset – Reset via SPI command.

Both of these Resets are functionally equivalent. It is important to provide one of these two Resets after power-up to ensure that the logic and registers are in their default state. A hardware Reset can be achieved automatically by placing an RC on the RESET pin (see Figure 9-1). The values must be such that the device is held in Reset for a minimum of 2 µs after VDD reaches the operating voltage, as indicated in the electrical specification (tRL).

FIGURE 9-1: RESET PIN CONFIGURATION EXAMPLE

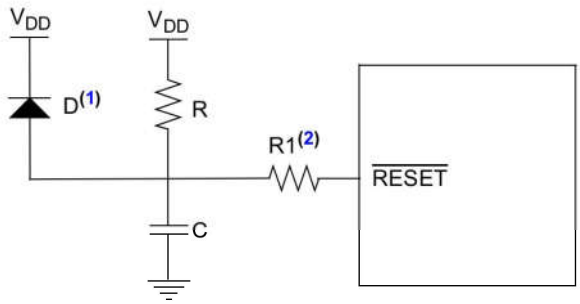

Note 1: The diode, D, helps discharge the capacitor quickly when V_{DD} powers down.
2: R1 = 1 kΩ to 10 kΩ will limit any current flowing into $\overline{\text{RESET}}$ from the external capacitor, C, in the event of $\overline{\text{RESET}}$ pin breakdown due to Electrostatic Discharge (ESD) or Electrical Overstress (EOS).

15.MODES OF OPERATION

The XL2515 has five modes of operation. These modes are:

1. Configuration mode.
2. Normal mode.
3. Sleep mode.
4. Listen-Only mode.
5. Loopback mode.

The operational mode is selected via the REQOP[2:0] bits (CANCTRL[7:5]); see Register 10-1).
When changing modes, the mode will not actually change until all pending message transmissions are complete. The requested mode must be verified by reading the OPMOD[2:0] bits (CANSTAT[7:5]); see Register 10-2.

15.1 Configuration Mode

The XL2515 must be initialized before activation. This is only possible if the device is in the Configuration mode. Configuration mode is automatically selected after power-up, a Reset or can be entered from any other mode by setting the REQOP[2:0] bits to '100'. When Configuration mode is entered, all error counters are cleared. Configuration mode is the only mode where the following registers are modifiable:

- CNF1, CNF2, CNF3 registers
- TXRTSCTRL register
- Filter registers
- Mask registers

15.2 Sleep Mode

The XL2515 has an internal Sleep mode that is used to minimize the current consumption of the device. The SPI interface remains active for reading even when the XL2515 is in Sleep mode, allowing access to all registers.

To enter Sleep mode, the Request Operation Mode bits are set in the CANCTRL register (REQOP[2:0]). The OPMOD[2:0] bits (CANSTAT[7:5]) indicate the opera- tion mode. These bits should be read after sending the SLEEP command to the XL2515. The XL2515 is active and has not yet entered Sleep mode until these bits indicate that Sleep mode has been entered.

When in internal Sleep mode, the wake-up interrupt is still active (if enabled). This is done so that the MCU can also be placed into a Sleep mode and use the XL2515 to wake it up upon detecting activity on the bus.

When in Sleep mode, the XL2515 stops its internal oscillator. The XL2515 will wake up when bus activity occurs or when the MCU sets, via the SPI interface, the WAKIF bit (CANINTF[6]). To 'generate' a wake-up attempt, the WAKIE bit (CANINTE[6]) must also be set in order for the wake-up interrupt to occur.
The TXCAN pin will remain in the recessive state while the XL2515 is in Sleep mode.

15.2.1 WAKE-UP FUNCTIONS

The device will monitor the RXCAN pin for activity while it is in Sleep mode. If the WAKIE bit is set, the device will wake-up and generate an interrupt. Since the internal oscillator is shut down while in Sleep mode, it will take some amount of time for the oscillator to start-up and the device to enable itself to receive messages. This Oscillator Start-up Timer (OST) is defined as 128 TOSC.

The device will ignore the message that caused the wake-up from Sleep mode, as well as any messages that occur while the device is 'waking up'. The device will wake up in Listen-Only mode. The MCU must set Normal mode before the XL2515 will be able to communicate on the bus.

The device can be programmed to apply a low-pass filter function to the RXCAN input line while in internal Sleep mode. This feature can be used to prevent the device from waking up due to short glitches on the CAN bus lines. The WAKFIL bit (CNF3[6]) enables or disables the filter.

15.3 Listen-Only Mode

Listen-Only mode provides a means for the XL2515 to receive all messages (including messages with errors) by configuring the RXM[1:0] bits (RXBnCTRL[6:5]). This mode can be used for bus monitor applications or for detecting the baud rate in 'hot plugging' situations.

For Auto-Baud Detection (ABD), it is necessary that at least two other nodes are communicating with each other. The baud rate can be detected empirically by testing different values until valid messages are received. Listen-Only mode is a silent mode, meaning no messages will be transmitted while in this mode (including error flags or Acknowledge signals). In Listen-Only mode, both valid and invalid messages will be received, regardless of filters and masks or the Receive Buffer Operating Mode bits, RXMn. The error counters are reset and deactivated in this state. The Listen-Only mode is activated by setting the Request Operation Mode bits (REQOP[2:0]) in the CANCTRL register.

15.4 Loopback Mode

Loopback mode will allow internal transmission of messages from the transmit buffers to the receive buffers without actually transmitting messages on the CAN bus. This mode can be used in system development and testing. In this mode, the ACK bit is ignored and the device will allow incoming messages from itself, just as if they were coming from another node. The Loopback mode is a silent mode, meaning no messages will be trans- mitted while in this state (including error flags or Acknowledge signals). The TXCAN pin will be in a recessive state.
The filters and masks can be used to allow only particular messages to be loaded into the Receive registers. The masks can be set to all zeros to provide a mode that accepts all messages. The Loopback mode is activated by setting the Request Operation Mode bits in the CANCTRL register.

15.5 Normal Mode

Normal mode is the standard operating mode of the XL2515. In this mode, the device actively monitors all bus messages and generates Acknowledge bits, error frames, etc. This is also the only mode in which the XL2515 will transmit messages over the CAN bus.

16.SPI INTERFACE

16.1 Overview

The XL2515 is designed to interface directly with the Serial Peripheral Interface (SPI) port available on many microcontrollers and supports Mode 0,0 and Mode 1,1. Commands and data are sent to the device via the SI pin, with data being clocked in on the rising edge of SCK. Data are driven out by the XL2515 (on the SO line) on the falling edge of SCK. The CS pin must be held low while any operation is performed. Table 12-1 shows the instruction bytes for all operations. Refer to Figure 12-10 and Figure 12-11 for detailed input and output timing diagrams for both Mode 0,0 and Mode 1,1 operation.

Note:
The XL2515 expects the first byte after lowering CS to be the instruction/command byte. This implies that CS must be raised and then lowered again to invoke another command.

16.2 RESET Instruction

The RESET instruction can be used to reinitialize the internal registers of the XL2515 and set the Configuration mode. This command provides the same functionality, via the SPI interface, as the RESET pin.
The RESET instruction is a single byte instruction that requires selecting the device by pulling the CS pin low, sending the instruction byte and then raising the CS pin. It is highly recommended that the RESET command be sent (or the RESET pin be lowered) as part of the power-on initialization sequence.

16.3 READ Instruction

The READ instruction is started by lowering the CS pin. The READ instruction is then sent to the XL2515, followed by the 8-bit address (A7 through A0). Next, the data stored in the register at the selected address will be shifted out on the SO pin.
The internal Address Pointer is automatically incremented to the next address once each byte of data is shifted out. Therefore, it is possible to read the next consecutive register address by continuing to provide clock pulses. Any number of consecutive register locations can be read sequentially using this method. The READ operation is terminated by raising the CS pin (Figure 12-2).

16.4 READ RX BUFFER Instruction

The READ RX BUFFER instruction (Figure 12-3) provides a means to quickly address a receive buffer for reading. This instruction reduces the SPI overhead by one byte, the address byte. The command byte actually has four possible values that determine the Address Pointer location. Once the command byte is sent, the controller clocks out the data at the address location, the same as the READ instruction (i.e., sequential reads are possible). This instruction further reduces the SPI overhead by automatically clearing the associated receive flag, RXnIF (CANINTF), when CS is raised at the end of the command.

16.5 WRITE Instruction

The WRITE instruction is started by lowering the CS pin. The WRITE instruction is then sent to the XL2515, followed by the address and at least one byte of data.
It is possible to write to sequential registers by continuing to clock in data bytes as long as CS is held low. Data will actually be written to the register on the rising edge of the SCK line for the D0 bit. If the CS line is brought high before eight bits are loaded, the write will be aborted for that data byte and previous bytes in the command will have been written. Refer to the timing diagram in Figure 12-4 for a more detailed illustration of the byte write sequence.

16.6 LOAD TX BUFFER Instruction

The LOAD TX BUFFER instruction (Figure 12-5) eliminates the eight-bit address required by a normal WRITE command. The eight-bit instruction sets the Address Pointer to one of six addresses to quickly write to a transmit buffer that points to the "ID" or "data" address of any of the three transmit buffers.

16.7 Request-to-Send (RTS) Instruction

The RTS command can be used to initiate message transmission for one or more of the transmit buffers. The XL2515 is selected by lowering the CS pin. The RTS command byte is then sent. As shown in Figure 12-6, the last three bits of this command indicate which transmit buffer(s) are enabled to send.
This command will set the TXREQ bit (TXBnCTRL[3]) for the respective buffer(s). Any or all of the last three bits can be set in a single command. If the RTS command is sent with nnn = 000, the command will be ignored.

16.8 READ STATUS Instruction

The READ STATUS instruction allows single instruction access to some of the often used status bits for message reception and transmission. The XL2515 is selected by lowering the CS pin and the READ STATUS command byte, shown in Figure 12-8, is sent to the XL2515. Once the command byte is sent, the XL2515 will return eight bits of data that contain the status. If additional clocks are sent after the first eight bits are transmitted, the XL2515 will continue to output the status bits as long as the CS pin is held low and clocks are provided on SCK. Each status bit returned in this command may also be read by using the standard READ command with the appropriate register address.

16.9 RX STATUS Instruction

The RX STATUS instruction (Figure 12-9) is used to quickly determine which filter matched the message and message type (standard, extended, remote). After the command byte is sent, the controller will return 8 bits of data that contain the status data. If more clocks are sent after the eight bits are transmitted, the controller will continue to output the same status bits as long as the CS pin stays low and clocks are provided.

16.10 BIT MODIFY Instruction

The BIT MODIFY instruction provides a means for setting or clearing individual bits in specific status and control registers. This command is not available for all registers. See Section 11.0 “Register Map” to determine which registers allow the use of this command.

Note: Executing the `BIT MODIFY` command on registers that are not bit-modifiable will force the mask to FFh. This will allow byte writes to the registers, not `BIT MODIFY`.

The part is selected by lowering the CS pin and the BIT MODIFY command byte is then sent to the XL2515. The command is followed by the address of the register, the mask byte and finally, the data byte.

The mask byte determines which bits in the register will be allowed to change. A ‘1’ in the mask byte will allow a bit in the register to change, while a ‘0’ will not. The data byte determines what value the modified bits in the register will be changed to. A ‘1’ in the data byte will set the bit and a ‘0’ will clear the bit, provided that the mask for that bit is set to a ‘1’ (see Figure 12-7).

FIGURE 12-1: BIT MODIFY

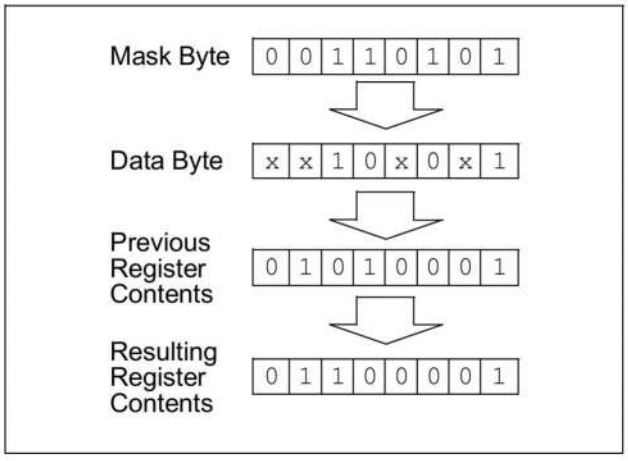

TABLE 12-1: SPI INSTRUCTION SET

Instruction Name	Instruction Format	Description
RESET	1100 0000	Resets internal registers to the default state, sets Configuration mode.
READ	0000 0011	Reads data from the register beginning at selected address.
READ RX BUFFER	1001 0nm0	When reading a receive buffer, reduces the overhead of a normal READ command by placing the Address Pointer at one of four locations, as indicated by 'n,m'. **Note:** The associated RX flag bit, RXnIF (CANINTF), will be cleared after bringing CS high.
WRITE	0000 0010	Writes data to the register beginning at the selected address.
LOAD TX BUFFER	0100 0abc	When loading a transmit buffer, reduces the overhead of a normal WRITE command by placing the Address Pointer at one of six locations, as indicated by 'a,b,c'.
RTS (Message Request-to-Send)	1000 0nnn	Instructs controller to begin message transmission sequence for any of the transmit buffers. 1000 0nnn Request-to-Send for TXB2 — Request-to-Send for TXB1 — Request-to-Send for TXBO
READ STATUS	1010 0000	Quick polling command that reads several status bits for transmit and receive functions.
RX STATUS	1011 0000	Quick polling command that indicates filter match and message type (standard, extended and/or remote) of received message.
BIT MODIFY	0000 0101	Allows the user to set or clear individual bits in a particular register. **Note:** Not all registers can be bit modified with this command. Executing this command on registers that are not bit modifiable will force the mask to FFh. See the register map in **Section 17.0 "Register Map"** for a list of the registers that apply.

FIGURE 12-2: READ INSTRUCTION

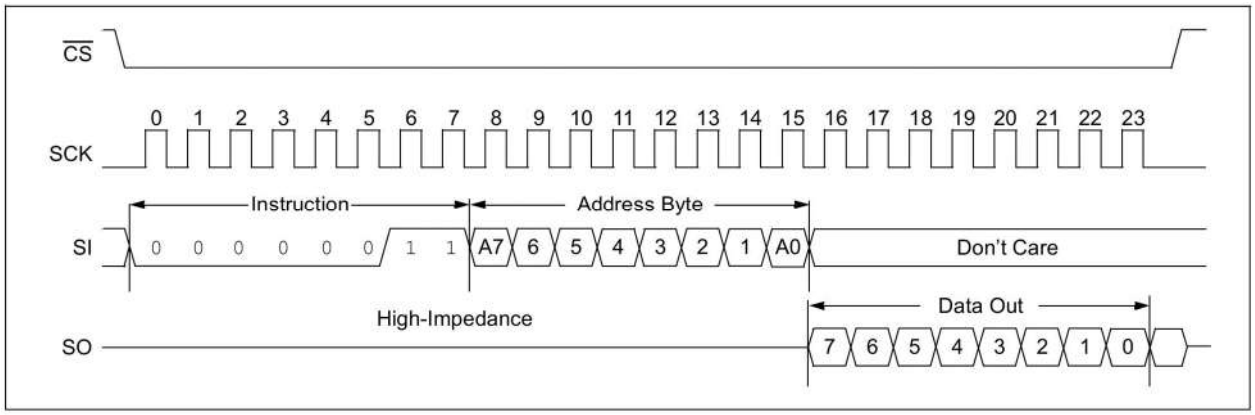

FIGURE 12-3: READ RX BUFFER INSTRUCTION

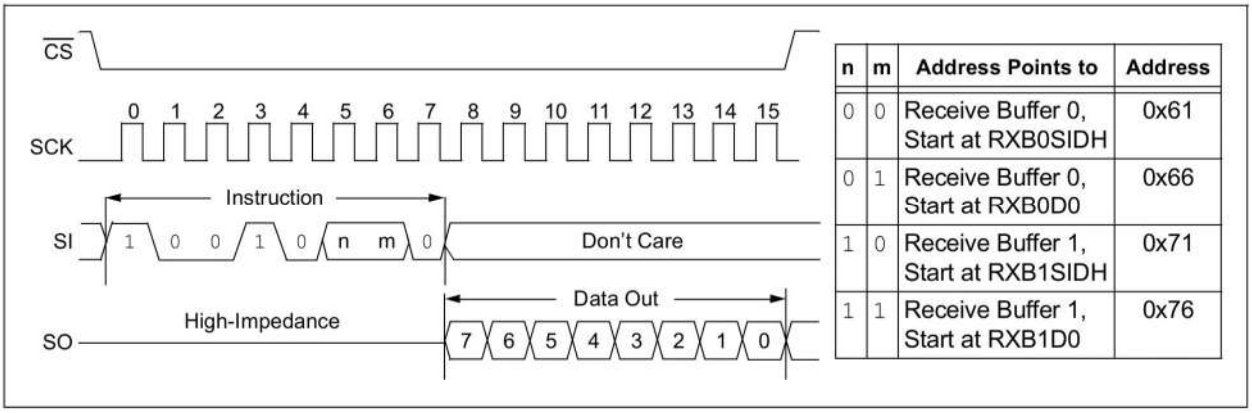

n	m	Address Points to	Address
0	0	Receive Buffer 0, Start at RXB0SIDH	0x61
0	1	Receive Buffer 0, Start at RXB0D0	0x66
1	0	Receive Buffer 1, Start at RXB1SIDH	0x71
1	1	Receive Buffer 1, Start at RXB1D0	0x76

FIGURE 12-4: BYTE WRITE INSTRUCTION

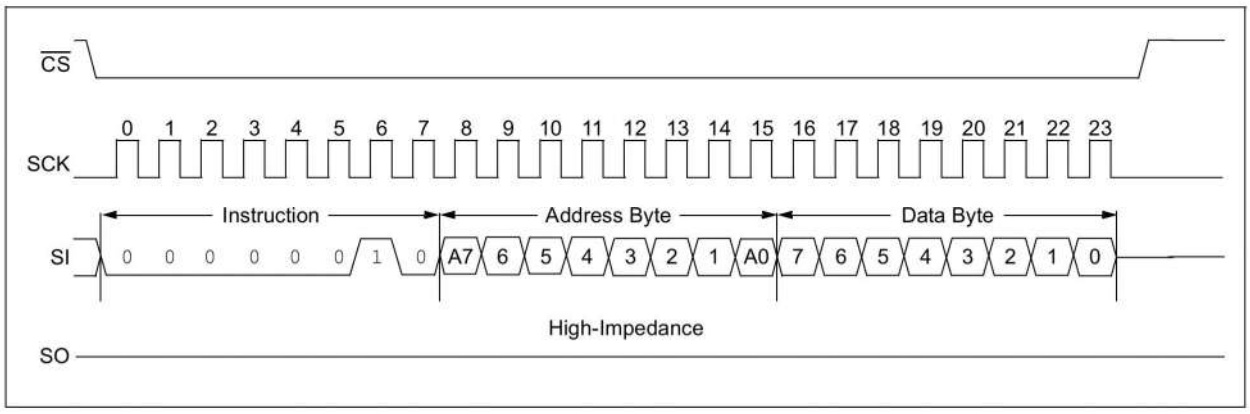

FIGURE 12-5: LOAD TX BUFFER INSTRUCTION

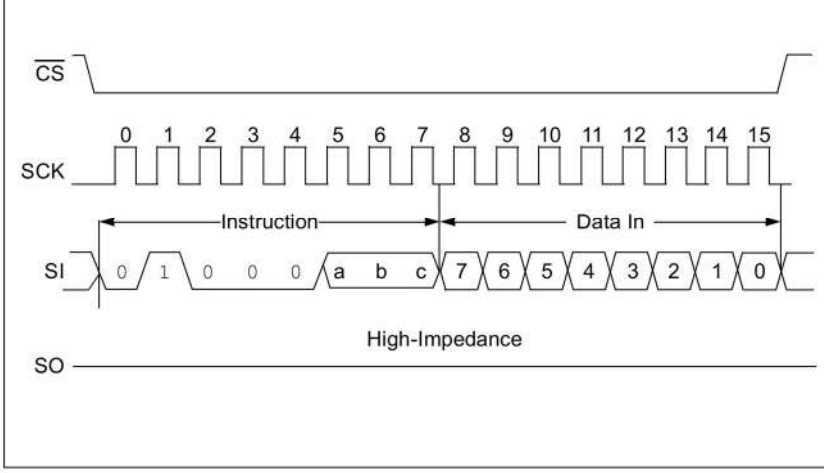

a	b	c	Address Points to	Addr
0	0	0	TX Buffer 0, Start at TXB0SIDH	0x31
0	0	1	TX Buffer 0, Start at TXB0D0	0x36
0	1	0	TX Buffer 1, Start at TXB1SIDH	0x41
0	1	1	TX Buffer 1, Start at TXB1D0	0x46
1	0	0	TX Buffer 2, Start at TXB2SIDH	0x51
1	0	1	TX Buffer 2, Start at TXB2D0	0x56

FIGURE 12-6: REQUEST-TO-SEND (RTS) INSTRUCTION

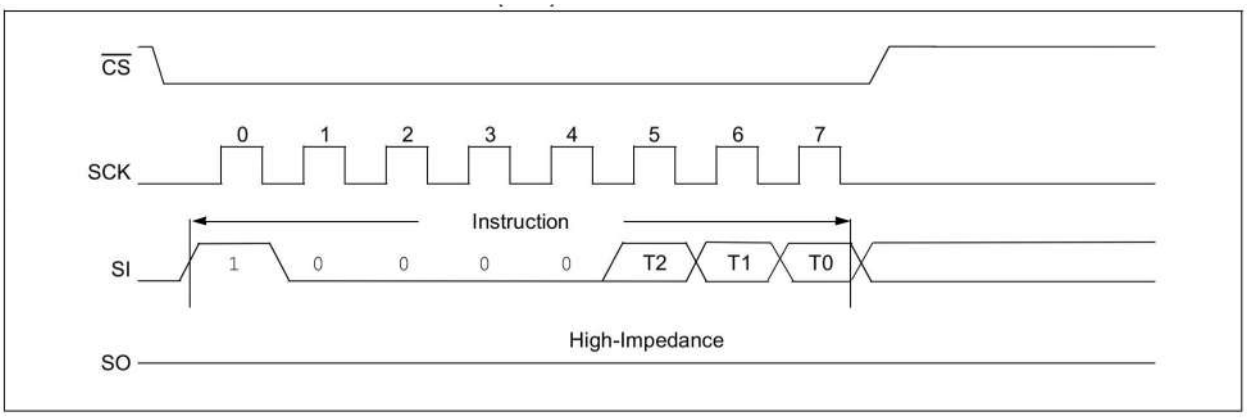

FIGURE 12-7: BIT MODIFY INSTRUCTION

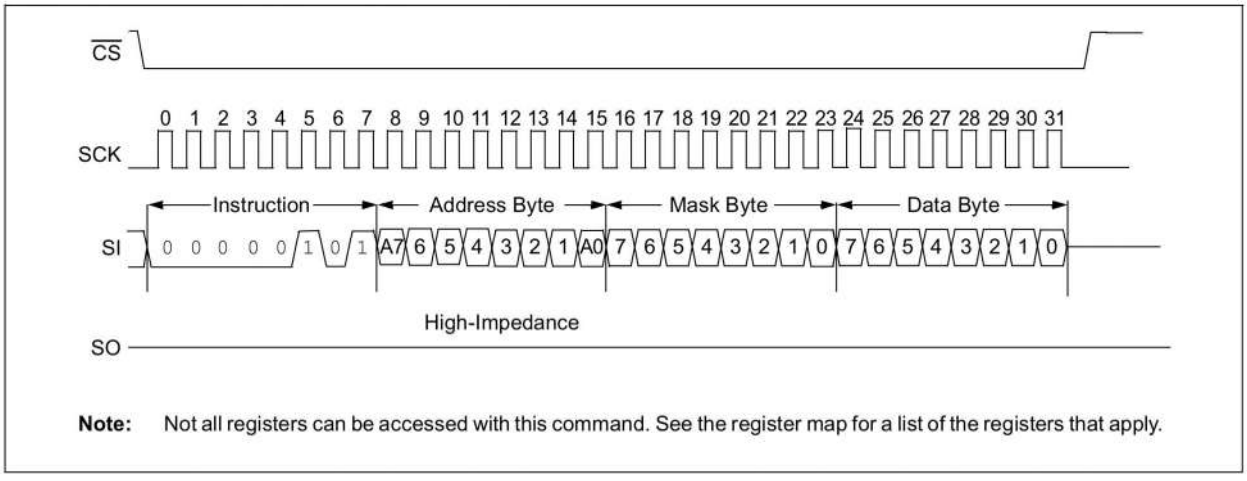

Note: Not all registers can be accessed with this command. See the register map for a list of the registers that apply.

FIGURE 12-8: READ STATUS INSTRUCTION

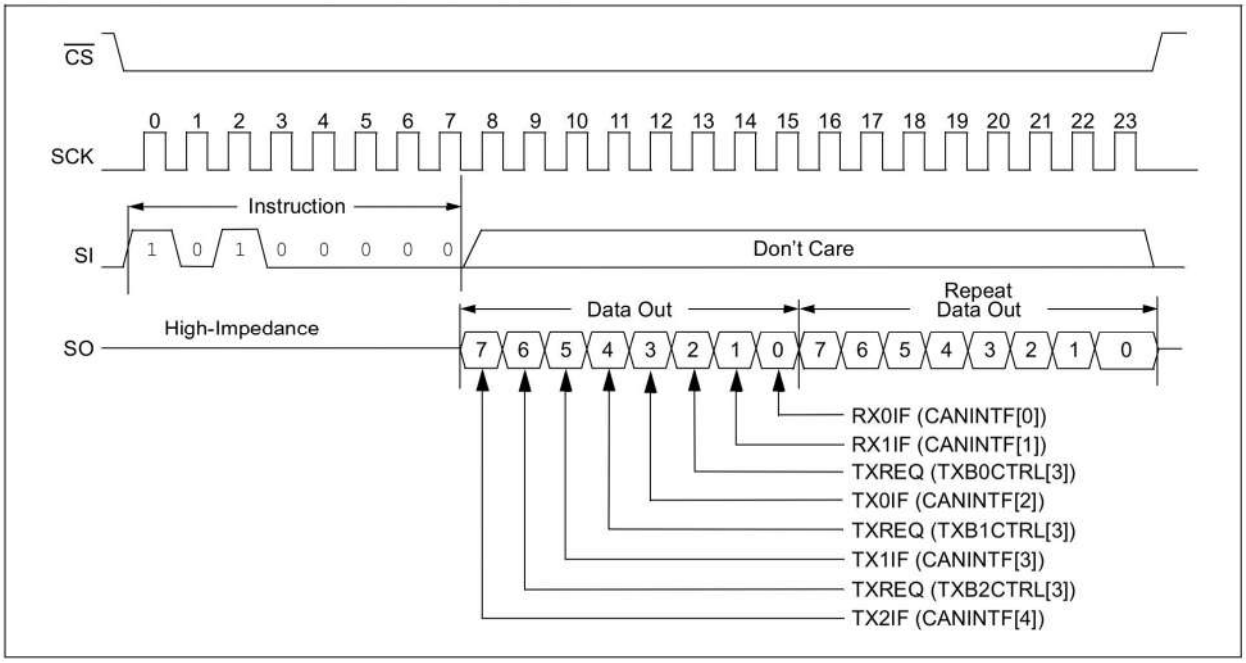

FIGURE 12-9: RX STATUS INSTRUCTION

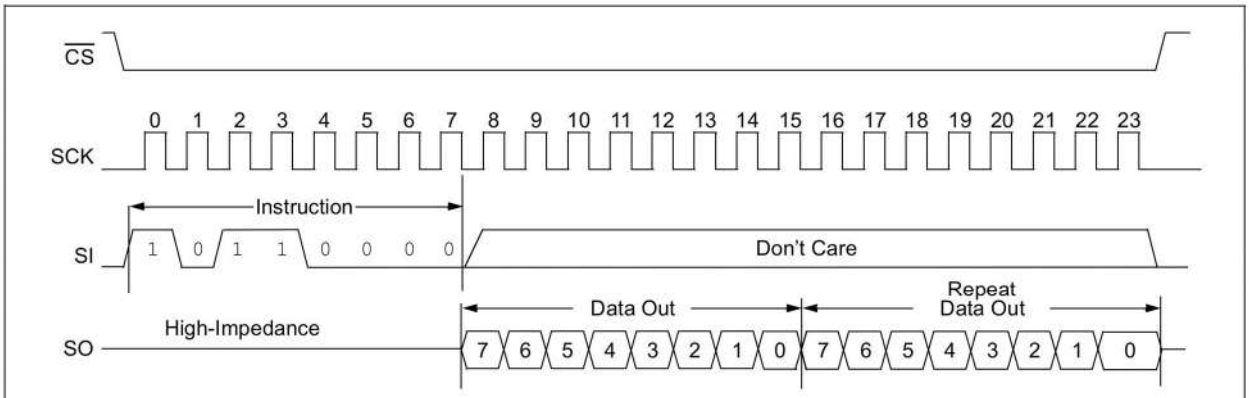

7	6	Received Message
0	0	No RX message
0	1	Message in RXB0
1	0	Message in RXB1
1	1	Messages in both buffers*

RXnIF (CANINTF) bits are mapped to bits 7 and 6.

4	3	Msg Type Received
0	0	Standard data frame
0	1	Standard remote frame
1	0	Extended data frame
1	1	Extended remote frame

The extended ID bit is mapped to bit 4. The RTR bit is mapped to bit 3.

2	1	0	Filter Match
0	0	0	RXF0
0	0	1	RXF1
0	1	0	RXF2
0	1	1	RXF3
1	0	0	RXF4
1	0	1	RXF5
1	1	0	RXF0 (rollover to RXB1)
1	1	1	RXF1 (rollover to RXB1)

*Buffer 0 has higher priority; therefore, RXB0 status is reflected in bits[4:0].

FIGURE 12-10:SPI INPUT TIMING

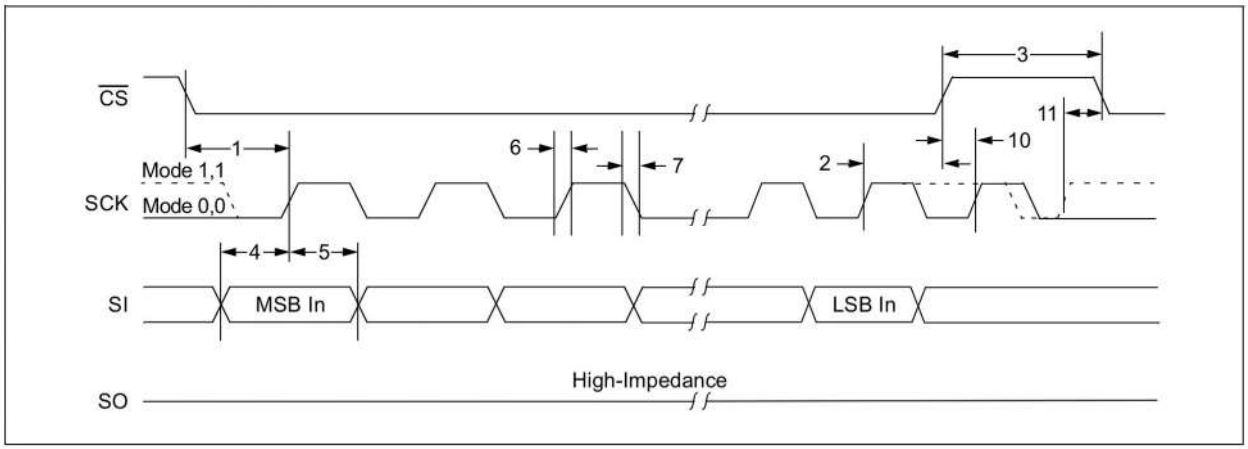

FIGURE 12-11:SPI OUTPUT TIMING

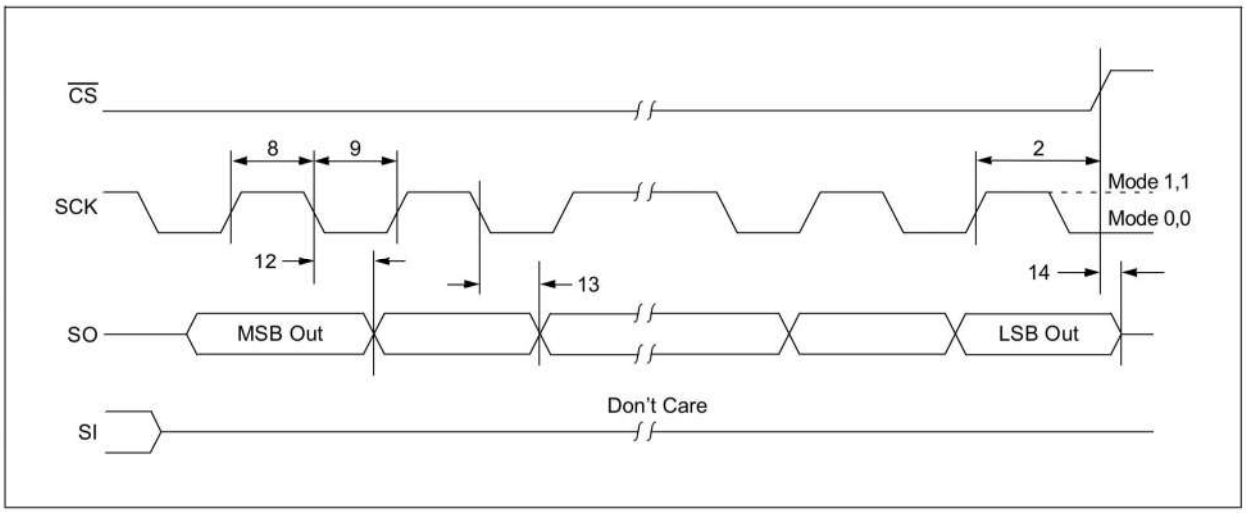

17.REGISTER MAP

The register map for the XL2515 is shown in Table 11-1. Address locations for each register are determined by using the column (higher order four bits) and row (lower order four bits) values. The registers have been arranged to optimize the sequential reading and writing of data. Some specific control and status registers allow individual bit modification using the SPI BIT MODIFY command. The registers that allow this command are shown as shaded locations in Table 11-1. A summary of the control registers is shown in Table 11-2.

TABLE 11-1: CAN CONTROLLER REGISTER MAP

Lower Address Bits	Higher Order Address Bits							
	0000 xxxx	0001 xxxx	0010 xxxx	0011 xxxx	0100 xxxx	0101 xxxx	0110 xxxx	0111 xxxx
0000	RXF0SIDH	RXF3SIDH	RXM0SIDH	TXB0CTRL	TXB1CTRL	TXB2CTRL	RXB0CTRL	RXB1CTRL
0001	RXF0SIDL	RXF3SIDL	RXM0SIDL	TXB0SIDH	TXB1SIDH	TXB2SIDH	RXB0SIDH	RXB1SIDH
0010	RXF0EID8	RXF3EID8	RXM0EID8	TXB0SIDL	TXB1SIDL	TXB2SIDL	RXB0SIDL	RXB1SIDL
0011	RXF0EID0	RXF3EID0	RXM0EID0	TXB0EID8	TXB1EID8	TXB2EID8	RXB0EID8	RXB1EID8
0100	RXF1SIDH	RXF4SIDH	RXM1SIDH	TXB0EID0	TXB1EID0	TXB2EID0	RXB0EID0	RXB1EID0
0101	RXF1SIDL	RXF4SIDL	RXM1SIDL	TXB0DLC	TXB1DLC	TXB2DLC	RXB0DLC	RXB1DLC
0110	RXF1EID8	RXF4EID8	RXM1EID8	TXB0D0	TXB1D0	TXB2D0	RXB0D0	RXB1D0
0111	RXF1EID0	RXF4EID0	RXM1EID0	TXB0D1	TXB1D1	TXB2D1	RXB0D1	RXB1D1
1000	RXF2SIDH	RXF5SIDH	CNF3	TXB0D2	TXB1D2	TXB2D2	RXB0D2	RXB1D2
1001	RXF2SIDL	RXF5SIDL	CNF2	TXB0D3	TXB1D3	TXB2D3	RXB0D3	RXB1D3
1010	RXF2EID8	RXF5EID8	CNF1	TXB0D4	TXB1D4	TXB2D4	RXB0D4	RXB1D4
1011	RXF2EID0	RXF5EID0	CANINTE	TXB0D5	TXB1D5	TXB2D5	RXB0D5	RXB1D5
1100	BFPCTRL	TEC	CANINTF	TXB0D6	TXB1D6	TXB2D6	RXB0D6	RXB1D6
1101	TXRTSCTRL	REC	EFLG	TXB0D7	TXB1D7	TXB2D7	RXB0D7	RXB1D7
1110	CANSTAT	CANSTAT	CANSTAT	CANSTAT	CANSTAT	CANSTAT	CANSTAT	CANSTAT
1111	CANCTRL	CANCTRL	CANCTRL	CANCTRL	CANCTRL	CANCTRL	CANCTRL	CANCTRL

Note: Shaded-Green register locations indicate that the user is allowed to manipulate individual bits using the BIT MODIFY command.

TABLE 11-2: CONTROL REGISTER SUMMARY

Register Name	Address (Hex)	Bit 7	Bit 6	Bit 5	Bit 4	Bit 3	Bit 2	Bit 1	Bit 0	POR/Reset Value
BFPCTRL	0C	—	—	B1BFS	B0BFS	B1BFE	B0BFE	B1BFM	B0BFM	--00 0000
TXRTSCTRL	0D	—	—	B2RTS	B1RTS	B0RTS	B2RTSM	B1RTSM	B0RTSM	--xx x000
CANSTAT	XE	OPMOD2	OPMOD1	OPMOD0	—	ICOD2	ICOD1	ICOD0	—	100- 000-
CANCTRL	XF	REQOP2	REQOP1	REQOP0	ABAT	OSM	CLKEN	CLKPRE1	CLKPRE0	1000 0111
TEC	1C	Transmit Error Counter (TEC)								0000 0000
REC	1D	Receive Error Counter (REC)								0000 0000
CNF3	28	SOF	WAKFIL	—	—	—	PHSEG22	PHSEG21	PHSEG20	00-- -000
CNF2	29	BTLMODE	SAM	PHSEG12	PHSEG11	PHSEG10	PRSEG2	PRSEG1	PRSEG0	0000 0000
CNF1	2A	SJW1	SJW0	BRP5	BRP4	BRP3	BRP2	BRP1	BRP0	0000 0000
CANINTE	2B	MERRE	WAKIE	ERRIE	TX2IE	TX1IE	TX0IE	RX1IE	RX0IE	0000 0000
CANINTF	2C	MERRF	WAKIF	ERRIF	TX2IF	TX1IF	TX0IF	RX1IF	RX0IF	0000 0000
EFLG	2D	RX1OVR	RX0OVR	TXBO	TXEP	RXEP	TXWAR	RXWAR	EWARN	0000 0000
TXB0CTRL	30	—	ABTF	MLOA	TXERR	TXREQ	—	TXP1	TXP0	-000 0-00
TXB1CTRL	40	—	ABTF	MLOA	TXERR	TXREQ	—	TXP1	TXP0	-000 0-00
TXB2CTRL	50	—	ABTF	MLOA	TXERR	TXREQ	—	TXP1	TXP0	-000 0-00
RXB0CTRL	60	—	RXM1	RXM0	—	RXRTR	BUKT	BUKT1	FILHIT0	-00- 0000
RXB1CTRL	70	—	RXM1	RXM0	—	RXRTR	FILHIT2	FILHIT1	FILHIT0	-00- 0000

17.1 REGISTERS DISCRIPTION

The chip XL2515 has over 200 internal registers. Here's a breakdown of the bit definitions and functions of these registers.

REGISTER 4-10:

RXFnSIDH: FILTER n STANDARD IDENTIFIER REGISTER HIGH (ADDRESS: 00h, 04h, 08h, 10h, 14h, 18h) (1)

R/W-x	R/W-x	R/W-x	R/W-x	R/W-x	R/W-x	R/W-x	R/W-x
SID10	SID9	SID8	SID7	SID6	SID5	SID4	SID3
bit 7							bit 0

Legend:			
R = Readable bit	W = Writable bit	U = Unimplemented bit, read as '0'	
-n = Value at POR	'1' = Bit is set	'0' = Bit is cleared	x = Bit is unknown

bit 7-0 **SID[10:3]:** Standard Identifier Filter bits
These bits hold the filter bits to be applied to bits[10:3] of the Standard Identifier portion of a received message.

Note 1: The Mask and Filter registers read all '0's when in any mode except Configuration mode.

REGISTER 4-11:

RXFnSIDL: FILTER n STANDARD IDENTIFIER REGISTER LOW (ADDRESS: 01h, 05h, 09h, 11h, 15h, 19h) (1)

R/W-x	R/W-x	R/W-x	U-0	R/W-x	U-0	R/W-x	R/W-x
SID2	SID1	SID0	—	EXIDE	—	EID17	EID16
bit 7							bit 0

Legend:			
R = Readable bit	W = Writable bit	U = Unimplemented bit, read as '0'	
-n = Value at POR	'1' = Bit is set	'0' = Bit is cleared	x = Bit is unknown

bit 7-5 **SID[2:0]:** Standard Identifier Filter bits
These bits hold the filter bits to be applied to bits[2:0] of the Standard Identifier portion of a received message.

bit 4 **Unimplemented:** Read as '0'

bit 3 **EXIDE:** Extended Identifier Enable bit
1 = Filter is applied only to extended frames
0 = Filter is applied only to standard frames

bit 2 **Unimplemented:** Read as '0'

bit 1-0 **EID[17:16]:** Extended Identifier Filter bits
These bits hold the filter bits to be applied to bits[17:16] of the Extended Identifier portion of a received message.

Note 1: The Mask and Filter registers read all '0's when in any mode except Configuration mode.

REGISTER 4-12:

RXFnEID8: FILTER n EXTENDED IDENTIFIER REGISTER HIGH (ADDRESS: 02h, 06h, 0Ah, 12h, 16h, 1Ah) (1)

R/W-x	R/W-x	R/W-x	R/W-x	R/W-x	R/W-x	R/W-x	R/W-x
EID15	EID14	EID13	EID12	EID11	EID10	EID9	EID8
bit 7							bit 0

Legend:			
R = Readable bit	W = Writable bit	U = Unimplemented bit, read as '0'	
-n = Value at POR	'1' = Bit is set	'0' = Bit is cleared	x = Bit is unknown

bit 7-0 **EID[15:8]:** Extended Identifier bits
These bits hold the filter bits to be applied to bits[15:8] of the Extended Identifier portion of a received message or to Byte 0 in received data if the corresponding RXM[1:0] bits = 00 and EXIDE = 0.

Note 1: The Mask and Filter registers read all '0's when in any mode except Configuration mode.

REGISTER 4-13:

RXFnEID0: FILTER n EXTENDED 1 REGISTER LOW (ADDRESS: 03h, 07h, 0Bh, 13h, 17h, 1Bh) (1)

R/W-x	R/W-x	R/W-x	R/W-x	R/W-x	R/W-x	R/W-x	R/W-x
EID7	EID6	EID5	EID4	EID3	EID2	EID1	EID0
bit 7							bit 0

Legend:			
R = Readable bit	W = Writable bit	U = Unimplemented bit, read as '0'	
-n = Value at POR	'1' = Bit is set	'0' = Bit is cleared	x = Bit is unknown

bit 7-0 **EID[7:0]:** Extended Identifier bits
These bits hold the filter bits to be applied to bits[7:0] of the Extended Identifier portion of a received message or to Byte 1 in received data if the corresponding RXM[1:0] bits = 00 and EXIDE = 0.

Note 1: The Mask and Filter registers read all '0's when in any mode except Configuration mode.

REGISTER 4-14:

RXMnSIDH: MASK n STANDARD IDENTIFIER REGISTER HIGH (ADDRESS: 20h, 24h) (1)

R/W-0	R/W-0	R/W-0	R/W-0	R/W-0	R/W-0	R/W-0	R/W-0
SID10	SID9	SID8	SID7	SID6	SID5	SID4	SID3
bit 7							bit 0

Legend:			
R = Readable bit	W = Writable bit	U = Unimplemented bit, read as '0'	
-n = Value at POR	'1' = Bit is set	'0' = Bit is cleared	x = Bit is unknown

bit 7-0 **SID[10:3]:** Standard Identifier Mask bits
These bits hold the mask bits to be applied to bits[10:3] of the Standard Identifier portion of a received message.

Note 1: The Mask and Filter registers read all '0's when in any mode except Configuration mode.

REGISTER 4-15:

RXMnSIDL: MASK n STANDARD IDENTIFIER REGISTER LOW (ADDRESS: 21h, 25h) (1)

R/W-0	R/W-0	R/W-0	U-0	U-0	U-0	R/W-0	R/W-0
SID2	SID1	SID0	—	—	—	EID17	EID16
bit 7							bit 0

Legend:			
R = Readable bit	W = Writable bit	U = Unimplemented bit, read as '0'	
-n = Value at POR	'1' = Bit is set	'0' = Bit is cleared	x = Bit is unknown

bit 7-5 **SID[2:0]:** Standard Identifier Mask bits
These bits hold the mask bits to be applied to bits[2:0] of the Standard Identifier portion of a received message.

bit 4-2 **Unimplemented:** Reads as '0'

bit 1-0 **EID[17:16]:** Extended Identifier Mask bits
These bits hold the mask bits to be applied to bits[17:16] of the Extended Identifier portion of a received message.

Note 1: The Mask and Filter registers read all '0's when in any mode except Configuration mode.

REGISTER 4-16:

RXMnEID8: MASK n EXTENDED IDENTIFIER REGISTER HIGH (ADDRESS: 22h, 26h) (1)

R/W-0	R/W-0	R/W-0	R/W-0	R/W-0	R/W-0	R/W-0	R/W-0
EID15	EID14	EID13	EID12	EID11	EID10	EID9	EID8
bit 7							bit 0

Legend:			
R = Readable bit	W = Writable bit	U = Unimplemented bit, read as '0'	
-n = Value at POR	'1' = Bit is set	'0' = Bit is cleared	x = Bit is unknown

bit 7-0 **EID[15:8]:** Extended Identifier bits
These bits hold the filter bits to be applied to bits[15:8] of the Extended Identifier portion of a received message. If the corresponding RXM[1:0] bits = 00 and EXIDE = 0, these bits are applied to Byte 0 in received data.

Note 1: The Mask and Filter registers read all '0's when in any mode except Configuration mode.

REGISTER 4-17:

RXMnEID0: MASK n EXTENDED IDENTIFIER REGISTER LOW (ADDRESS: 23h, 27h)(1)

R/W-0	R/W-0	R/W-0	R/W-0	R/W-0	R/W-0	R/W-0	R/W-0
EID7	EID6	EID5	EID4	EID3	EID2	EID1	EID0
bit 7							bit 0

Legend:			
R = Readable bit	W = Writable bit	U = Unimplemented bit, read as '0'	
-n = Value at POR	'1' = Bit is set	'0' = Bit is cleared	x = Bit is unknown

bit 7-0 **EID[7:0]:** Extended Identifier Mask bits
These bits hold the filter bits to be applied to bits[7:0] of the Extended Identifier portion of a received message. If the corresponding RXM[1:0] bits = 00 and EXIDE = 0, these bits are applied to Byte 1 in received data.

Note 1: The Mask and Filter registers read all '0's when in any mode except Configuration mode.

REGISTER 4-3: BFPCTRL: RXnBF PIN CONTROL AND STATUS REGISTER (ADDRESS: 0Ch)

U-0	U-0	R/W-0	R/W-0	R/W-0	R/W-0	R/W-0	R/W-0
—	—	B1BFS	B0BFS	B1BFE	B0BFE	B1BFM	B0BFM
bit 7							bit 0

Legend:			
R = Readable bit	W = Writable bit	U = Unimplemented bit, read as '0'	
-n = Value at POR	'1' = Bit is set	'0' = Bit is cleared	x = Bit is unknown

bit 7-6 **Unimplemented:** Read as '0'

bit 5 **B1BFS:** $\overline{\text{RX1BF}}$ Pin State bit (Digital Output mode only)
Reads as '0' when RX1BF is configured as an interrupt pin.

bit 4 **B0BFS:** $\overline{\text{RX0BF}}$ Pin State bit (Digital Output mode only)
Reads as '0' when RX0BF is configured as an interrupt pin.

bit 3 **B1BFE:** $\overline{\text{RX1BF}}$ Pin Function Enable bit
1 = Pin function is enabled, operation mode is determined by the B1BFM bit
0 = Pin function is disabled, pin goes to a high-impedance state

bit 2 **B0BFE:** $\overline{\text{RX0BF}}$ Pin Function Enable bit
1 = Pin function is enabled, operation mode is determined by the B0BFM bit
0 = Pin function is disabled, pin goes to a high-impedance state

bit 1 **B1BFM:** $\overline{\text{RX1BF}}$ Pin Operation mode bit
1 = Pin is used as an interrupt when a valid message is loaded into RXB1
0 = Digital Output mode

bit 0 **B0BFM:** $\overline{\text{RX0BF}}$ Pin Operation mode bit
1 = Pin is used as an interrupt when a valid message is loaded into RXB0
0 = Digital Output mode

REGISTER 3-2: TXRTSCTRL: TXnRTS PIN CONTROL AND STATUS REGISTER (ADDRESS: 0Dh)

U-0	U-0	R-x	R-x	R-x	R/W-0	R/W-0	R/W-0
—	—	B2RTS	B1RTS	B0RTS	B2RTSM	B1RTSM	B0RTSM
bit 7							bit 0

Legend:			
R = Readable bit	W = Writable bit	U = Unimplemented bit, read as '0'	
-n = Value at POR	'1' = Bit is set	'0' = Bit is cleared	x = Bit is unknown

bit 7-6 **Unimplemented:** Read as '0'

bit 5 **B2RTS:** $\overline{\text{TX2RTS}}$ Pin State bit
- Reads state of $\overline{\text{TX2RTS}}$ pin when in Digital Input mode
- Reads as '0' when pin is in Request-to-Send mode

bit 4 **B1RTS:** $\overline{\text{TX1RTS}}$ Pin State bit
- Reads state of $\overline{\text{TX1RTS}}$ pin when in Digital Input mode
- Reads as '0' when pin is in Request-to-Send mode

bit 3 **B0RTS:** $\overline{\text{TX0RTS}}$ Pin State bit
- Reads state of $\overline{\text{TX0RTS}}$ pin when in Digital Input mode
- Reads as '0' when pin is in Request-to-Send mode

bit 2 **B2RTSM:** $\overline{\text{TX2RTS}}$ Pin mode bit
1 = Pin is used to request message transmission of TXB2 buffer (on falling edge)
0 = Digital input

bit 1 **B1RTSM:** $\overline{\text{TX1RTS}}$ Pin mode bit
1 = Pin is used to request message transmission of TXB1 buffer (on falling edge)
0 = Digital input

bit 0 **B0RTSM:** $\overline{\text{TX0RTS}}$ Pin mode bit
1 = Pin is used to request message transmission of TXB0 buffer (on falling edge)
0 = Digital input

REGISTER 10-2: CANSTAT: CAN STATUS REGISTER (ADDRESS: XEh)

R-1	R-0	R-0	U-0	R-0	R-0	R-0	U-0
OPMOD2	OPMOD1	OPMOD0	—	ICOD2	ICOD1	ICOD0	—
bit 7							bit 0

Legend:			
R = Readable bit	W = Writable bit	U = Unimplemented bit, read as '0'	
-n = Value at POR	'1' = Bit is set	'0' = Bit is cleared	x = Bit is unknown

bit 7-5 **OPMOD[2:0]:** Operation Mode bits
000 = Device is in Normal Operation mode
001 = Device is in Sleep mode
010 = Device is in Loopback mode
011 = Device is in Listen-Only mode
100 = Device is in Configuration mode

bit 4 **Unimplemented:** Read as '0'

bit 3-1 **ICOD[2:0]:** Interrupt Flag Code bits
000 = No interrupt
001 = Error interrupt
010 = Wake-up interrupt
011 = TXB0 interrupt
100 = TXB1 interrupt
101 = TXB2 interrupt
110 = RXB0 interrupt
111 = RXB1 interrupt

bit 0 **Unimplemented:** Read as '0'

REGISTER 10-1: CANCTRL: CAN CONTROL REGISTER (ADDRESS: XFh)

R/W-1	R/W-0	R/W-0	R/W-0	R/W-0	R/W-1	R/W-1	R/W-1
REQOP2	REQOP1	REQOP0	ABAT	OSM	CLKEN	CLKPRE1	CLKPRE0
bit 7							bit 0

Legend:			
R = Readable bit	W = Writable bit	U = Unimplemented bit, read as '0'	
-n = Value at POR	'1' = Bit is set	'0' = Bit is cleared	x = Bit is unknown

bit 7-5 **REQOP[2:0]:** Request Operation Mode bits
000 = Sets Normal Operation mode
001 = Sets Sleep mode
010 = Sets Loopback mode
011 = Sets Listen-Only mode
100 = Sets Configuration mode
All other values for the REQOPn bits are invalid and should not be used. On power-up, REQOP[2:0] = b'100'.

bit 4 **ABAT:** Abort All Pending Transmissions bit
1 = Requests abort of all pending transmit buffers
0 = Terminates request to abort all transmissions

bit 3 **OSM:** One-Shot Mode bit
1 = Enabled; messages will only attempt to transmit one time
0 = Disabled; messages will reattempt transmission if required

bit 2 **CLKEN:** CLKOUT Pin Enable bit
1 = CLKOUT pin is enabled
0 = CLKOUT pin is disabled (pin is in high-impedance state)

bit 1-0 **CLKPRE[1:0]:** CLKOUT Pin Prescaler bits
00 = F_{CLKOUT} = System Clock/1
01 = F_{CLKOUT} = System Clock/2
10 = F_{CLKOUT} = System Clock/4
11 = F_{CLKOUT} = System Clock/8

REGISTER 6-1: TEC: TRANSMIT ERROR COUNTER REGISTER (ADDRESS: 1Ch)

R-0	R-0	R-0	R-0	R-0	R-0	R-0	R-0
TEC7	TEC6	TEC5	TEC4	TEC3	TEC2	TEC1	TEC0
bit 7							bit 0

Legend:			
R = Readable bit	W = Writable bit	U = Unimplemented bit, read as '0'	
-n = Value at POR	'1' = Bit is set	'0' = Bit is cleared	x = Bit is unknown

bit 7-0 **TEC[7:0]:** Transmit Error Count bits

REGISTER 6-2: REC: RECEIVE ERROR COUNTER REGISTER (ADDRESS: 1Dh)

R-0	R-0	R-0	R-0	R-0	R-0	R-0	R-0
REC7	REC6	REC5	REC4	REC3	REC2	REC1	REC0
bit 7							bit 0

Legend:			
R = Readable bit	W = Writable bit	U = Unimplemented bit, read as '0'	
-n = Value at POR	'1' = Bit is set	'0' = Bit is cleared	x = Bit is unknown

bit 7-0 **REC[7:0]:** Receive Error Count bits

REGISTER 5-3: CNF3: CONFIGURATION REGISTER 3 (ADDRESS: 28h)

R/W-0	R/W-0	U-0	U-0	U-0	R/W-0	R/W-0	R/W-0
SOF	WAKFIL	—	—	—	PHSEG2[2:0]		
bit 7							bit 0

Legend:			
R = Readable bit	W = Writable bit	U = Unimplemented bit, read as '0'	
-n = Value at POR	'1' = Bit is set	'0' = Bit is cleared	x = Bit is unknown

bit 7 **SOF:** Start-of-Frame Signal bit
If CLKEN (CANCTRL[2]) = 1:
1 = CLKOUT pin is enabled for SOF signal
0 = CLKOUT pin is enabled for clock out function
If CLKEN (CANCTRL[2]) = 0:
Bit is don't care.

bit 6 **WAKFIL:** Wake-up Filter bit
1 = Wake-up filter is enabled
0 = Wake-up filter is disabled

bit 5-3 **Unimplemented:** Reads as '0'

bit 2-0 **PHSEG2[2:0]:** PS2 Length bits
(PHSEG2[2:0] + 1) x T_Q. Minimum valid setting for PS2 is 2 T_Qs.

REGISTER 5-2: CNF2: CONFIGURATION REGISTER 2 (ADDRESS: 29h)

R/W-0	R/W-0	R/W-0	R/W-0	R/W-0	R/W-0	R/W-0	R/W-0
BTLMODE	SAM	PHSEG1[2:0]			PRSEG2	PRSEG1	PRSEG0
bit 7							bit 0

Legend:			
R = Readable bit	W = Writable bit	U = Unimplemented bit, read as '0'	
-n = Value at POR	'1' = Bit is set	'0' = Bit is cleared	x = Bit is unknown

bit 7 **BTLMODE:** PS2 Bit Time Length bit
1 = Length of PS2 is determined by the PHSEG2[2:0] bits of CNF3
0 = Length of PS2 is the greater of PS1 and IPT (2 T_Qs)

bit 6 **SAM**: Sample Point Configuration bit
1 = Bus line is sampled three times at the sample point
0 = Bus line is sampled once at the sample point

bit 5-3 **PHSEG1[2:0]:** PS1 Length bits
(PHSEG1[2:0] + 1) x T_Q.

bit 2-0 **PRSEG[2:0]:** Propagation Segment Length bits
(PRSEG[2:0] + 1) x T_Q.

REGISTER 5-1: CNF1: CONFIGURATION REGISTER 1 (ADDRESS: 2Ah)

R/W-0	R/W-0	R/W-0	R/W-0	R/W-0	R/W-0	R/W-0	R/W-0
SJW1	SJW0	BRP5	BRP4	BRP3	BRP2	BRP1	BRP0
bit 7							bit 0

Legend:			
R = Readable bit	W = Writable bit	U = Unimplemented bit, read as '0'	
-n = Value at POR	'1' = Bit is set	'0' = Bit is cleared	x = Bit is unknown

bit 7-6 **SJW[1:0]:** Synchronization Jump Width Length bits
11 = Length = 4 x T_Q
10 = Length = 3 x T_Q
01 = Length = 2 x T_Q
00 = Length = 1 x T_Q

bit 5-0 **BRP[5:0]:** Baud Rate Prescaler bits
T_Q = 2 x (BRP[5:0] + 1)/F_{OSC}.

REGISTER 7-1: CANINTE: CAN INTERRUPT ENABLE REGISTER (ADDRESS: 2Bh)

R/W-0	R/W-0	R/W-0	R/W-0	R/W-0	R/W-0	R/W-0	R/W-0
MERRE	WAKIE	ERRIE	TX2IE	TX1IE	TX0IE	RX1IE	RX0IE
bit 7							bit 0

Legend:			
R = Readable bit	W = Writable bit	U = Unimplemented bit, read as '0'	
-n = Value at POR	'1' = Bit is set	'0' = Bit is cleared	x = Bit is unknown

bit 7 **MERRE:** Message Error Interrupt Enable bit
1 = Interrupt on error during message reception or transmission
0 = Disabled

bit 6 **WAKIE:** Wake-up Interrupt Enable bit
1 = Interrupt on CAN bus activity
0 = Disabled

bit 5 **ERRIE:** Error Interrupt Enable bit (multiple sources in EFLG register)
1 = Interrupt on EFLG error condition change
0 = Disabled

bit 4 **TX2IE:** Transmit Buffer 2 Empty Interrupt Enable bit
1 = Interrupt on TXB2 becoming empty
0 = Disabled

bit 3 **TX1IE:** Transmit Buffer 1 Empty Interrupt Enable bit
1 = Interrupt on TXB1 becoming empty
0 = Disabled

bit 2 **TX0IE:** Transmit Buffer 0 Empty Interrupt Enable bit
1 = Interrupt on TXB0 becoming empty
0 = Disabled

bit 1 **RX1IE:** Receive Buffer 1 Full Interrupt Enable bit
1 = Interrupt when message was received in RXB1
0 = Disabled

bit 0 **RX0IE:** Receive Buffer 0 Full Interrupt Enable bit
1 = Interrupt when message was received in RXB0
0 = Disabled

REGISTER 7-2: CANINTF: CAN INTERRUPT FLAG REGISTER (ADDRESS: 2Ch)

R/W-0	R/W-0	R/W-0	R/W-0	R/W-0	R/W-0	R/W-0	R/W-0
MERRF	WAKIF	ERRIF	TX2IF	TX1IF	TX0IF	RX1IF	RX0IF
bit 7							bit 0

Legend:			
R = Readable bit	W = Writable bit	U = Unimplemented bit, read as '0'	
-n = Value at POR	'1' = Bit is set	'0' = Bit is cleared	x = Bit is unknown

bit 7 **MERRF:** Message Error Interrupt Flag bit
1 = Interrupt is pending (must be cleared by MCU to reset the interrupt condition)
0 = No interrupt is pending

bit 6 **WAKIF:** Wake-up Interrupt Flag bit
1 = Interrupt is pending (must be cleared by MCU to reset the interrupt condition)
0 = No interrupt is pending

bit 5 **ERRIF:** Error Interrupt Flag bit (multiple sources in EFLG register)
1 = Interrupt is pending (must be cleared by MCU to reset the interrupt condition)
0 = No interrupt is pending

bit 4 **TX2IF:** Transmit Buffer 2 Empty Interrupt Flag bit
1 = Interrupt is pending (must be cleared by MCU to reset the interrupt condition)
0 = No interrupt is pending

bit 3 **TX1IF:** Transmit Buffer 1 Empty Interrupt Flag bit
1 = Interrupt is pending (must be cleared by MCU to reset the interrupt condition)
0 = No interrupt is pending

bit 2 **TX0IF:** Transmit Buffer 0 Empty Interrupt Flag bit
1 = Interrupt is pending (must be cleared by MCU to reset the interrupt condition)
0 = No interrupt is pending

bit 1 **RX1IF:** Receive Buffer 1 Full Interrupt Flag bit
1 = Interrupt is pending (must be cleared by MCU to reset the interrupt condition)
0 = No interrupt is pending

bit 0 **RX0IF:** Receive Buffer 0 Full Interrupt Flag bit
1 = Interrupt is pending (must be cleared by MCU to reset the interrupt condition)
0 = No interrupt is pending

REGISTER 6-3: EFLG: ERROR FLAG REGISTER (ADDRESS: 2Dh)

R/W-0	R/W-0	R-0	R-0	R-0	R-0	R-0	R-0
RX1OVR	RX0OVR	TXBO	TXEP	RXEP	TXWAR	RXWAR	EWARN
bit 7							bit 0

Legend:			
R = Readable bit	W = Writable bit	U = Unimplemented bit, read as '0'	
-n = Value at POR	'1' = Bit is set	'0' = Bit is cleared	x = Bit is unknown

bit 7 **RX1OVR:** Receive Buffer 1 Overflow Flag bit
Sets when a valid message is received for RXB1 and RX1IF (CANINTF[1]) = 1. Must be reset by MCU.

bit 6 **RX0OVR:** Receive Buffer 0 Overflow Flag bit
Sets when a valid message is received for RXB0 and RX0IF (CANINTF[0]) = 1. Must be reset by MCU.

bit 5 **TXBO:** Bus-Off Error Flag bit
Sets when TEC reaches 255. Resets after a successful bus recovery sequence.

bit 4 **TXEP:** Transmit Error-Passive Flag bit
Sets when TEC is equal to or greater than 128. Resets when TEC is less than 128.

bit 3 **RXEP:** Receive Error-Passive Flag bit
Sets when REC is equal to or greater than 128. Resets when REC is less than 128.

bit 2 **TXWAR:** Transmit Error Warning Flag bit
Sets when TEC is equal to or greater than 96. Resets when TEC is less than 96.

bit 1 **RXWAR:** Receive Error Warning Flag bit
Sets when REC is equal to or greater than 96. Resets when REC is less than 96.

bit 0 **EWARN:** Error Warning Flag bit
Sets when TEC or REC is equal to or greater than 96 (TXWAR or RXWAR = 1). Resets when both REC and TEC are less than 96.

REGISTER 3-1: TXBnCTRL: TRANSMIT BUFFER n CONTROL REGISTER (ADDRESS: 30h, 40h, 50h)

U-0	R-0	R-0	R-0	R/W-0	U-0	R/W-0	R/W-0
—	ABTF	MLOA	TXERR	TXREQ	—	TXP1	TXP0
bit 7							bit 0

Legend:			
R = Readable bit	W = Writable bit	U = Unimplemented bit, read as '0'	
-n = Value at POR	'1' = Bit is set	'0' = Bit is cleared	x = Bit is unknown

bit 7 **Unimplemented:** Read as '0'

bit 6 **ABTF:** Message Aborted Flag bit
1 = Message was aborted
0 = Message completed transmission successfully

bit 5 **MLOA:** Message Lost Arbitration bit
1 = Message lost arbitration while being sent
0 = Message did not lose arbitration while being sent

bit 4 **TXERR:** Transmission Error Detected bit
1 = A bus error occurred while the message was being transmitted
0 = No bus error occurred while the message was being transmitted

bit 3 **TXREQ:** Message Transmit Request bit
1 = Buffer is currently pending transmission
(MCU sets this bit to request message be transmitted – bit is automatically cleared when the message is sent)
0 = Buffer is not currently pending transmission
(MCU can clear this bit to request a message abort)

bit 2 **Unimplemented:** Read as '0'

bit 1-0 **TXP[1:0]:** Transmit Buffer Priority bits
11 = Highest message priority
10 = High intermediate message priority
01 = Low intermediate message priority
00 = Lowest message priority

REGISTER 3-3:

TXBnSIDH: TRANSMIT BUFFER n STANDARD IDENTIFIER REGISTER HIGH (ADDRESS: 31h, 41h, 51h)

R/W-x	R/W-x	R/W-x	R/W-x	R/W-x	R/W-x	R/W-x	R/W-x
SID10	SID9	SID8	SID7	SID6	SID5	SID4	SID3
bit 7							bit 0

Legend:			
R = Readable bit	W = Writable bit	U = Unimplemented bit, read as '0'	
-n = Value at POR	'1' = Bit is set	'0' = Bit is cleared	x = Bit is unknown

bit 7-0 **SID[10:3]:** Standard Identifier bits

REGISTER 3-4:

TXBnSIDL: TRANSMIT BUFFER n STANDARD IDENTIFIER REGISTER LOW (ADDRESS: 32h, 42h, 52h)

R/W-x	R/W-x	R/W-x	U-0	R/W-x	U-0	R/W-x	R/W-x
SID2	SID1	SID0	—	EXIDE	—	EID17	EID16
bit 7							bit 0

Legend:			
R = Readable bit	W = Writable bit	U = Unimplemented bit, read as '0'	
-n = Value at POR	'1' = Bit is set	'0' = Bit is cleared	x = Bit is unknown

bit 7-5 **SID[2:0]:** Standard Identifier bits
bit 4 **Unimplemented:** Read as '0'
bit 3 **EXIDE:** Extended Identifier Enable bit
1 = Message will transmit Extended Identifier
0 = Message will transmit Standard Identifier
bit 2 **Unimplemented:** Read as '0'
bit 1-0 **EID[17:16]:** Extended Identifier bits

REGISTER 3-5:

TXBnEID8: TRANSMIT BUFFER n EXTENDED IDENTIFIER 8 REGISTER HIGH (ADDRESS: 33h, 43h, 53h)

R/W-x	R/W-x	R/W-x	R/W-x	R/W-x	R/W-x	R/W-x	R/W-x
EID15	EID14	EID13	EID12	EID11	EID10	EID9	EID8
bit 7							bit 0

Legend:			
R = Readable bit	W = Writable bit	U = Unimplemented bit, read as '0'	
-n = Value at POR	'1' = Bit is set	'0' = Bit is cleared	x = Bit is unknown

bit 7-0 **EID[15:8]:** Extended Identifier bits

REGISTER 3-6:

TXBnEID0: TRANSMIT BUFFER n EXTENDED IDENTIFIER 0 REGISTER LOW (ADDRESS: 34h, 44h, 54h)

R/W-x	R/W-x	R/W-x	R/W-x	R/W-x	R/W-x	R/W-x	R/W-x
EID7	EID6	EID5	EID4	EID3	EID2	EID1	EID0
bit 7							bit 0

Legend:			
R = Readable bit	W = Writable bit	U = Unimplemented bit, read as '0'	
-n = Value at POR	'1' = Bit is set	'0' = Bit is cleared	x = Bit is unknown

bit 7-0 **EID[7:0]:** Extended Identifier bits

REGISTER 3-7:

TXBnDLC: TRANSMIT BUFFER n DATA LENGTH CODE REGISTER (ADDRESS: 35h, 45h, 55h)

U-0	R/W-x	U-0	U-0	R/W-x	R/W-x	R/W-x	R/W-x
—	RTR	—	—	DLC3(1)	DLC2(1)	DLC1(1)	DLC0(1)
bit 7							bit 0

Legend:			
R = Readable bit	W = Writable bit	U = Unimplemented bit, read as '0'	
-n = Value at POR	'1' = Bit is set	'0' = Bit is cleared	x = Bit is unknown

bit 7 **Unimplemented:** Read as '0'

bit 6 **RTR:** Remote Transmission Request bit
1 = Transmitted message will be a remote transmit request
0 = Transmitted message will be a data frame

bit 5-4 **Unimplemented:** Reads as '0'

bit 3-0 **DLC[3:0]:** Data Length Code bits(1)
Sets the number of data bytes to be transmitted (0 to 8 bytes).

Note 1: It is possible to set the DLC[3:0] bits to a value greater than eight; however, only eight bytes are transmitted.

REGISTER 3-8:

TXBnDm: TRANSMIT BUFFER n DATA BYTE m REGISTER (ADDRESS: 36h-3Dh, 46h-4Dh, 56h-5Dh)

R/W-x	R/W-x	R/W-x	R/W-x	R/W-x	R/W-x	R/W-x	R/W-x
TXBnDm7	TXBnDm6	TXBnDm5	TXBnDm4	TXBnDm3	TXBnDm2	TXBnDm1	TXBnDm0
bit 7							bit 0

Legend:			
R = Readable bit	W = Writable bit	U = Unimplemented bit, read as '0'	
-n = Value at POR	'1' = Bit is set	'0' = Bit is cleared	x = Bit is unknown

bit 7-0 **TXBnDm[7:0]:** Transmit Buffer n Data Field Byte m bits

REGISTER 4-1: RXB0CTRL: RECEIVE BUFFER 0 CONTROL REGISTER (ADDRESS: 60h)

U-0	R/W-0	R/W-0	U-0	R-0	R/W-0	R-0	R-0
—	RXM1	RXM0	—	RXRTR	BUKT	BUKT1	FILHIT0(1)
bit 7							bit 0

Legend:			
R = Readable bit	W = Writable bit	U = Unimplemented bit, read as '0'	
-n = Value at POR	'1' = Bit is set	'0' = Bit is cleared	x = Bit is unknown

bit 7 **Unimplemented:** Read as '0'

bit 6-5 **RXM[1:0]:** Receive Buffer Operating mode bits
11 = Turns mask/filters off; receives any message
10 = Reserved
01 = Reserved
00 = Receives all valid messages using either Standard or Extended Identifiers that meet filter criteria; Extended ID Filter registers, RXFnEID8:RXFnEID0, are applied to the first two bytes of data in the messages with standard IDs

bit 4 **Unimplemented:** Read as '0'

bit 3 **RXRTR:** Received Remote Transfer Request bit
1 = Remote Transfer Request received
0 = No Remote Transfer Request received

bit 2 **BUKT:** Rollover Enable bit
1 = RXB0 message will roll over and be written to RXB1 if RXB0 is full
0 = Rollover is disabled

bit 1 **BUKT1:** Read-Only Copy of BUKT bit (used internally by the MCP2515)

bit 0 **FILHIT0:** Filter Hit bit (indicates which acceptance filter enabled reception of message)(1)
1 = Acceptance Filter 1 (RXF1)
0 = Acceptance Filter 0 (RXF0)

Note 1: If a rollover from RXB0 to RXB1 occurs, the FILHIT0 bit will reflect the filter that accepted the message that rolled over.

REGISTER 4-4:

RXBnSIDH: RECEIVE BUFFER n STANDARD IDENTIFIER REGISTER HIGH (ADDRESS: 61h, 71h)

R-x	R-x	R-x	R-x	R-x	R-x	R-x	R-x
SID10	SID9	SID8	SID7	SID6	SID5	SID4	SID3
bit 7							bit 0

Legend:			
R = Readable bit	W = Writable bit	U = Unimplemented bit, read as '0'	
-n = Value at POR	'1' = Bit is set	'0' = Bit is cleared	x = Bit is unknown

bit 7-0 **SID[10:3]:** Standard Identifier bits
These bits contain the eight Most Significant bits of the Standard Identifier for the received message.

REGISTER 4-5:

RXBnSIDL: RECEIVE BUFFER n STANDARD IDENTIFIER REGISTER LOW (ADDRESS: 62h, 72h)

R-x	R-x	R-x	R-x	R-x	U-0	R-x	R-x
SID2	SID1	SID0	SRR	IDE	—	EID17	EID16
bit 7							bit 0

Legend:			
R = Readable bit	W = Writable bit	U = Unimplemented bit, read as '0'	
-n = Value at POR	'1' = Bit is set	'0' = Bit is cleared	x = Bit is unknown

bit 7-5 **SID[2:0]:** Standard Identifier bits
These bits contain the three Least Significant bits of the Standard Identifier for the received message.

bit 4 **SRR:** Standard Frame Remote Transmit Request bit (valid only if IDE bit = 0)
1 = Standard frame Remote Transmit Request received
0 = Standard data frame received

bit 3 **IDE:** Extended Identifier Flag bit
This bit indicates whether the received message was a standard or an extended frame.
1 = Received message was an extended frame
0 = Received message was a standard frame

bit 2 **Unimplemented:** Read as '0'

bit 1-0 **EID[17:16]:** Extended Identifier bits
These bits contain the two Most Significant bits of the Extended Identifier for the received message.

REGISTER 4-6:

RXBnEID8: RECEIVE BUFFER n EXTENDED IDENTIFIER REGISTER HIGH (ADDRESS: 63h, 73h)

R-x	R-x	R-x	R-x	R-x	R-x	R-x	R-x
EID15	EID14	EID13	EID12	EID11	EID10	EID9	EID8
bit 7							bit 0

Legend:			
R = Readable bit	W = Writable bit	U = Unimplemented bit, read as '0'	
-n = Value at POR	'1' = Bit is set	'0' = Bit is cleared	x = Bit is unknown

bit 7-0 **EID[15:8]:** Extended Identifier bits
These bits hold bits 15 through 8 of the Extended Identifier for the received message

REGISTER 4-7:

RXBnEID0: RECEIVE BUFFER n EXTENDED IDENTIFIER REGISTER LOW (ADDRESS: 64h, 74h)

R-x	R-x	R-x	R-x	R-x	R-x	R-x	R-x
EID7	EID6	EID5	EID4	EID3	EID2	EID1	EID0
bit 7							bit 0

Legend:			
R = Readable bit	W = Writable bit	U = Unimplemented bit, read as '0'	
-n = Value at POR	'1' = Bit is set	'0' = Bit is cleared	x = Bit is unknown

bit 7-0 **EID[7:0]:** Extended Identifier bits
These bits hold the Least Significant eight bits of the Extended Identifier for the received message.

REGISTER 4-8:

RXBnDLC: RECEIVE BUFFER n DATA LENGTH CODE REGISTER (ADDRESS: 65h, 75h)

U-0	R-x	R-x	R-x	R-x	R-x	R-x	R-x
—	RTR	RB1	RB0	DLC3	DLC2	DLC1	DLC0
bit 7							bit 0

Legend:			
R = Readable bit	W = Writable bit	U = Unimplemented bit, read as '0'	
-n = Value at POR	'1' = Bit is set	'0' = Bit is cleared	x = Bit is unknown

bit 7 **Unimplemented:** Read as '0'

bit 6 **RTR:** Extended Frame Remote Transmission Request bit (valid only when IDE (RXBnSIDL[3]) = 1)
1 = Extended frame Remote Transmit Request received
0 = Extended data frame received

bit 5 **RB1:** Reserved Bit 1

bit 4 **RB0:** Reserved Bit 0

bit 3-0 **DLC[3:0]:** Data Length Code bits
Indicates the number of data bytes that were received.

REGISTER 4-9:

RXBnDm: RECEIVE BUFFER n DATA BYTE m REGISTER (ADDRESS: 66h-6Dh, 76h-7Dh)

R-x	R-x	R-x	R-x	R-x	R-x	R-x	R-x
RBnD7	RBnD6	RBnD5	RBnD4	RBnD3	RBnD2	RBnD1	RBnD0
bit 7							bit 0

Legend:			
R = Readable bit	W = Writable bit	U = Unimplemented bit, read as '0'	
-n = Value at POR	'1' = Bit is set	'0' = Bit is cleared	x = Bit is unknown

bit 7-0 **RBnD[7:0]:** Receive Buffer n Data Field Bytes m bits
Eight bytes containing the data bytes for the received message.

REGISTER 4-2: RXB1CTRL: RECEIVE BUFFER 1 CONTROL REGISTER (ADDRESS: 70h)

U-0	R/W-0	R/W-0	U-0	R-0	R-0	R-0	R-0
—	RXM1	RXM0	—	RXRTR	FILHIT2	FILHIT1	FILHIT0
bit 7							bit 0

Legend:			
R = Readable bit	W = Writable bit	U = Unimplemented bit, read as '0'	
-n = Value at POR	'1' = Bit is set	'0' = Bit is cleared	x = Bit is unknown

bit 7 **Unimplemented:** Read as '0'

bit 6-5 **RXM[1:0]:** Receive Buffer Operating mode bits
11 = Turns mask/filters off; receives any message
10 = Reserved
01 = Reserved
00 = Receives all valid messages using either Standard or Extended Identifiers that meet filter criteria

bit 4 **Unimplemented:** Read as '0'

bit 3 **RXRTR:** Received Remote Transfer Request bit
1 = Remote Transfer Request received
0 = No Remote Transfer Request received

bit 2-0 **FILHIT[2:0]:** Filter Hit bits (indicates which acceptance filter enabled reception of message)
101 = Acceptance Filter 5 (RXF5)
100 = Acceptance Filter 4 (RXF4)
011 = Acceptance Filter 3 (RXF3)
010 = Acceptance Filter 2 (RXF2)
001 = Acceptance Filter 1 (RXF1) (only if the BUKT bit is set in RXB0CTRL)
000 = Acceptance Filter 0 (RXF0) (only if the BUKT bit is set in RXB0CTRL)

18.ELECTRICAL CHARACTERISTICS

18.1 Absolute Maximum Ratings

Symbol	Parameter	Value	Unit
V_{DD}	Power Supply	6.5	V
V_{SS}	All Inputs and Outputs w.r.t. Vss	-0.6 to V_{DD} + 1.0V	V
T_{ST}	Storage Temperature	-65 to +150	℃
T_{ATPA}	Ambient Temperature with Power Applied	-40 to +105/125	℃
T_{STL}	Soldering Temperature of Leads (10 seconds)	+300	℃

† **Notice:**
Stresses above those listed under "Maximum Ratings" may cause permanent damage to the device. This is a stress rating only and functional operation of the device at those or any other conditions above those indicated in the operational listings of this specification is not implied. Exposure to maximum rating conditions for extended periods may affect device reliability.

TABLE 13-1: DC CHARACTERISTICS

DC Characteristics			V_{DD} = 2.7V to 5.5V		Industrial : T_{AMB} = -40°C to +85°C Extended (Q): T_{AMB} = -40°C to +125°C	
Param. No.	Sym.	Characteristic	Min.	Max.	Units	Conditions
	V_{DD}	Supply Voltage	2.7	5.5	V	
	V_{RET}	Register Retention Voltage	2.4	—	V	
		High-Level Input Voltage				
	V_{IH}	RXCAN Pin	2	V_{DD} + 1	V	
		SCK, CS, SI, TXnRTS Pins	0.7 V_{DD}	V_{DD} + 1	V	
		OSC1 Pin	0.85 V_{DD}	V_{DD}	V	
		RESET Pin	0.85 V_{DD}	V_{DD}	V	
		Low-Level Input Voltage				
	V_{IL}	RXCAN, TXnRTS Pins	-0.3	0.15 * V_{DD}	V	
		SCK, CS, SI Pins	-0.3	0.4 * V_{DD}	V	
		OSC1 Pin	V_{SS}	0.3 * V_{DD}	V	
		RESET Pin	V_{SS}	0.15 * V_{DD}	V	
		Low-Level Output Voltage				
	V_{OL}	TXCAN Pin	—	0.6	V	I_{OL} = +6.0 mA, V_{DD} = 4.5V
		RXnBF Pin	—	0.6	V	I_{OL} = +8.5 mA, V_{DD} = 4.5V
		SO, CLKOUT Pins	—	0.6	V	I_{OL} = +2.1 mA, V_{DD} = 4.5V
		INT Pin	—	0.6	V	I_{OL} = +1.6 mA, V_{DD} = 4.5V
		High-Level Output Voltage			V	
	V_{OH}	TXCAN, RXnBF Pins	V_{DD} – 0.7	—	V	I_{OH} = -3.0 mA, V_{DD} = 4.5V
		SO, CLKOUT Pins	V_{DD} – 0.5	—	V	I_{OH} = -400 µA, V_{DD} = 4.5V
		INT Pin	V_{DD} – 0.7	—	V	I_{OH} = -1.0 mA, V_{DD} = 4.5V
		Input Leakage Current				
	I_{LI}	All I/Os except OSC1 and TXnRTS Pins	-1	+1	µA	CS = RESET = V_{DD}, V_{IN} = V_{SS} to V_{DD}
		OSC1 Pin	-5	+5	µA	
	C_{INT}	Internal Capacitance (all inputs and outputs)	—	10	pF	T_{AMB} = +25°C, f_C = 1.0 MHz, V_{DD} = 0V **(Note 1)**
	I_{DD}	Operating Current	—	10	mA	V_{DD} = 5.5V, F_{OSC} = 25 MHz, F_{CLK} = 1 MHz, SO = Open
	I_{DDS}	Standby Current (Sleep mode)	—	5	µA	CS, TXnRTS = V_{DD}, inputs tied to V_{DD} or V_{SS}, -40°C to +85°C
			—	8	µA	CS, TXnRTS = V_{DD}, inputs tied to V_{DD} or V_{SS}, -40°C to +125°C

Note 1: This parameter is periodically sampled and not 100% tested.

TABLE 13-2: OSCILLATOR TIMING CHARACTERISTICS

Oscillator Timing Characteristics[1]			V_{DD} = 2.7V to 5.5V		Industrial : T_{AMB} = -40°C to +105°C Extended (Q): T_{AMB} = -40°C to +125°C	
Param. No.	**Sym.**	**Characteristic**	**Min.**	**Max.**	**Units**	**Conditions**
	F_{OSC}	Clock In Frequency	1 1	40 25	MHz MHz	V_{DD} = 4.5V to 5.5V V_{DD} = 2.7V to 5.5V
	T_{OSC}	Clock In Period	25 40	1000 1000	ns ns	V_{DD} = 4.5V to 5.5V V_{DD} = 2.7V to 5.5V
	T_{DUTY}	Duty Cycle (external clock input)	0.45	0.55	—	$T_{OSH}/(T_{OSH} + T_{OSL})$

Note 1: This parameter is periodically sampled and not 100% tested.

TABLE 13-3: CAN INTERFACE AC CHARACTERISTICS

CAN Interface AC Characteristics			V_{DD} = 2.7V to 5.5V		Industrial (I): T_{AMB} = -40°C to +105°C Extended (E): T_{AMB} = -40°C to +125°C	
Param. No.	**Sym.**	**Characteristic**	**Min.**	**Max.**	**Units**	**Conditions**
	T_{WF}	Wake-up Noise Filter	100	—	ns	

TABLE 13-4: RESET AC CHARACTERISTICS

Reset AC Characteristics			V_{DD} = 2.7V to 5.5V		Industrial : T_{AMB} = -40°C to +105°C Extended (Q): T_{AMB} = -40°C to +125°C	
Param. No.	**Sym.**	**Characteristic**	**Min.**	**Max.**	**Units**	**Conditions**
	t_{RL}	RESET Pin Low Time	10	—	µs	

TABLE 13-5: CLKOUT PIN AC CHARACTERISTICS

CLKOUT Pin AC/DC Characteristics			V_{DD} = 2.7V to 5.5V		Industrial : T_{AMB} = -40°C to +105°C Extended (Q): T_{AMB} = -40°C to +125°C	
Param. No.	**Sym.**	**Characteristic**	**Min.**	**Max.**	**Units**	**Conditions**
	$t_{hCLKOUT}$	CLKOUT Pin High Time	15	—	ns	T_{OSC} = 40 ns **(Note 1)**
	$t_{lCLKOUT}$	CLKOUT Pin Low Time	15	—	ns	T_{OSC} = 40 ns **(Note 1)**
	$t_{rCLKOUT}$	CLKOUT Pin Rise Time	—	5	ns	Measured from 0.3 V_{DD} to 0.7 V_{DD} **(Note 1)**
	$t_{fCLKOUT}$	CLKOUT Pin Fall Time	—	5	ns	Measured from 0.7 V_{DD} to 0.3 V_{DD} **(Note 1)**
	$t_{dCLKOUT}$	CLKOUT Propagation Delay	—	100	ns	**Note 1**
15	t_{hSOF}	Start-of-Frame High Time	—	2 T_{OSC}	ns	**Note 1**
16	t_{dSOF}	Start-of-Frame Propagation Delay	—	2 T_{OSC} + 0.5 T_Q	ns	Measured from CAN bit sample point; device is a receiver, BRP[5:0] (CNF1[5:0]) = 0 **(Note 2)**

Note

1: All CLKOUT mode functionality and output frequency are tested at device frequency limits; however, the CLKOUT prescaler is set to divide by one. This parameter is periodically sampled and not 100% tested.

2: Design guidance only, not tested.

FIGURE 13-1: START-OF-FRAME PIN AC CHARACTERISTICS

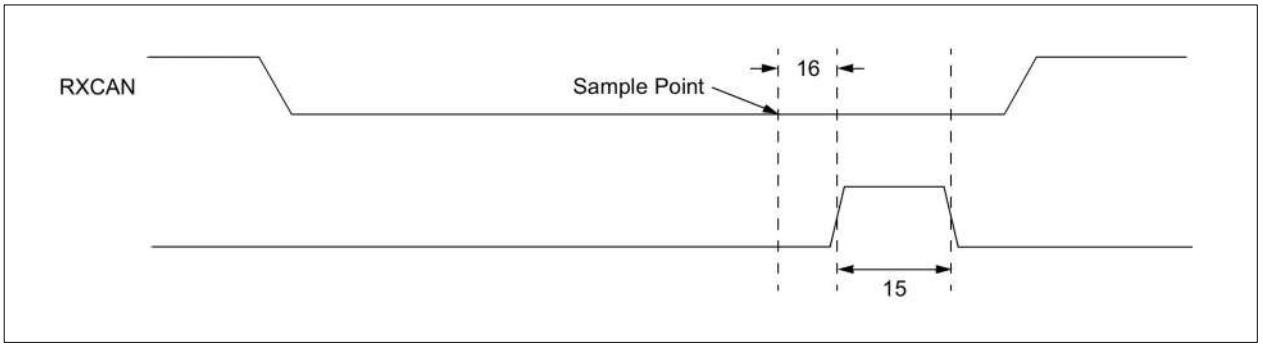

TABLE 13-6: SPI INTERFACE AC CHARACTERISTICS

SPI Interface AC Characteristics			V_{DD} = 2.7V to 5.5V		Industrial : T_{AMB} = -40°C to +105°C Extended (Q): T_{AMB} = -40°C to +125°C	
Param. No.	Sym.	Characteristic	Min.	Max.	Units	Conditions
	F_{CLK}	Clock Frequency	—	10	MHz	
1	T_{CSS}	CS Setup Time	50	—	ns	
2	T_{CSH}	CS Hold Time	50	—	ns	
3	T_{CSD}	CS Disable Time	50	—	ns	
4	T_{SU}	Data Setup Time	10	—	ns	
5	T_{HD}	Data Hold Time	10	—	ns	
6	T_R	Clock Rise Time	—	2	µs	Note 1
7	T_F	Clock Fall Time	—	2	µs	Note 1
8	T_{HI}	Clock High Time	45	—	ns	
9	T_{LO}	Clock Low Time	45	—	ns	
10	T_{CLD}	Clock Delay Time	50	—	ns	
11	T_{CLE}	Clock Enable Time	50	—	ns	
12	T_V	Output Valid from Clock Low	—	45	ns	
13	T_{HO}	Output Hold Time	0	—	ns	
14	T_{DIS}	Output Disable Time	—	100	ns	

Note 1: This parameter is not 100% tested.

19. PACKAGING INFORMATION

FIGURE 14 : SOP18 (300mil) Package outline dimensions

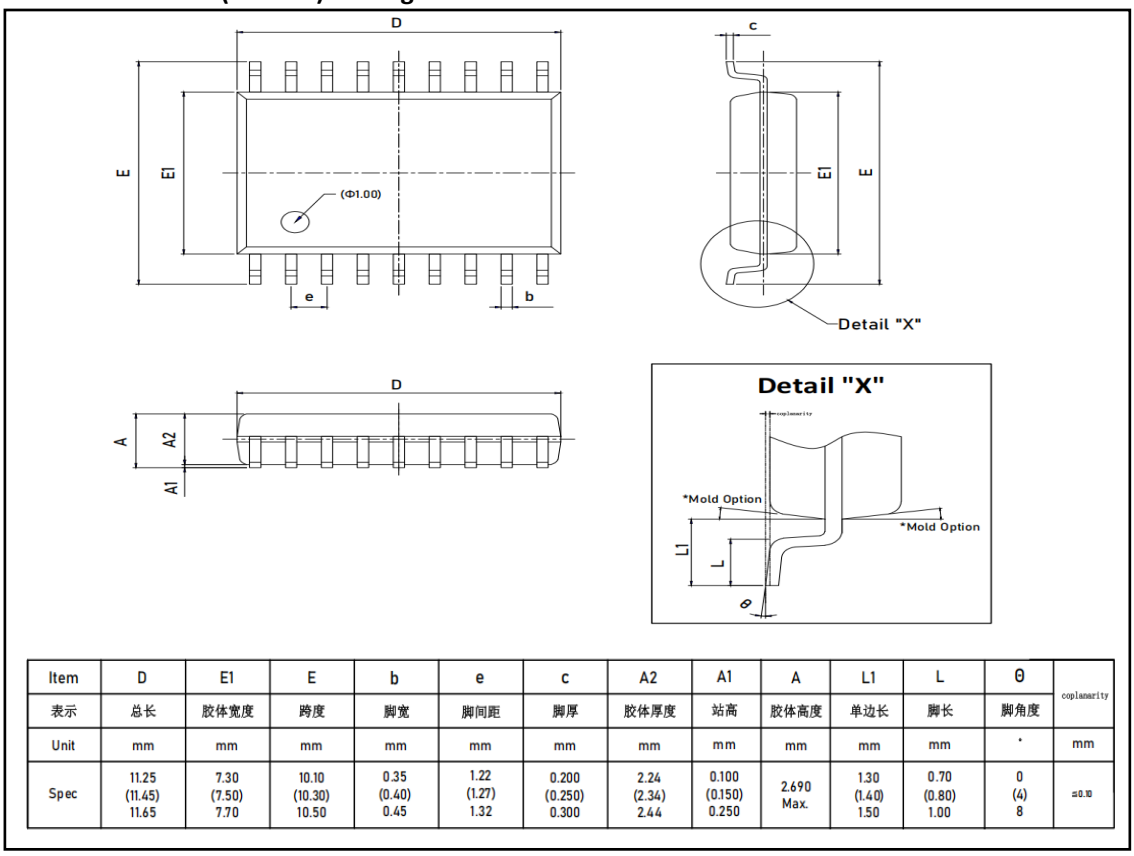

Item	D	E1	E	b	e	c	A2	A1	A	L1	L	θ	coplanarity
表示	总长	胶体宽度	跨度	脚宽	脚间距	脚厚	胶体厚度	站高	胶体高度	单边长	脚长	脚角度	
Unit	mm	mm	mm	mm	mm	mm	mm	mm	mm	mm	mm	°	mm
Spec	11.25 (11.45) 11.65	7.30 (7.50) 7.70	10.10 (10.30) 10.50	0.35 (0.40) 0.45	1.22 (1.27) 1.32	0.200 (0.250) 0.300	2.24 (2.34) 2.44	0.100 (0.150) 0.250	2.690 Max.	1.30 (1.40) 1.50	0.70 (0.80) 1.00	0 (4) 8	±0.10

Unit		Inch			mm		
Size Range		Min	Normal	Max	Min	Normal	Max
Number of Pin	n		18			18	
Pin spacing	p		.050			1.27	
Total height	A	.093	.099	.104	2.36	2.50	2.64
Moulded package thickness	A2	.088	.091	.094	2.24	2.31	2.39
Overhang clearance §	A1	.004	.008	.012	0.10	0.20	0.30
Total width	E	.394	.407	.420	10.01	10.34	10.67
Plastic moulded package width	E1	.291	.295	.299	7.39	7.49	7.59
Total length	D	.446	.454	.462	11.33	11.53	11.73
Inverted projection distance	h	.010	.020	.029	0.25	0.50	0.74
Foot length	L	.016	.033	.050	0.41	0.84	1.27
Angle of inclination of the foot	φ	0	4	8	0	4	8
Pin thickness	c	.009	.011	.012	0.23	0.27	0.30
Pin width	B	.014	.017	.020	0.36	0.42	0.51
Module tip taper	α	0	12	15	0	12	15
Taperat the bottom of the module	β	0	12	15	0	12	15

NOTES:

DIMENSIONS D AND E1 DO NOT INCLUDE RAW EDGES AND PROTRUSIONS OF THE MOULD. BURRS OR PROTRUSIONS ON EACH SIDE OF THE MOULD MUST NOT EXCEED 0.010" (0.254MM).

FIGURE 15 : DIP18 Package dimensions

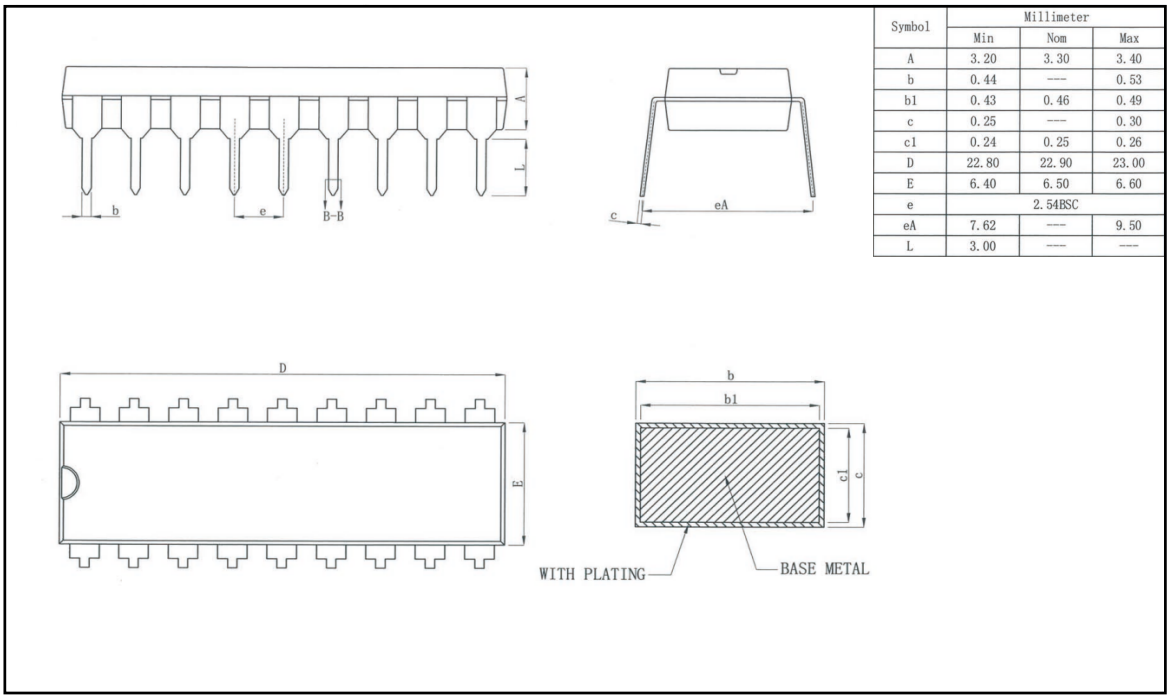

Symbol	Millimeter		
	Min	Nom	Max
A	3.20	3.30	3.40
b	0.44	----	0.53
b1	0.43	0.46	0.49
c	0.25	----	0.30
c1	0.24	0.25	0.26
D	22.80	22.90	23.00
E	6.40	6.50	6.60
e	2.54BSC		
eA	7.62	----	9.50
L	3.00	----	----

FIGURE 16 : TSSOP20 Package dimensions

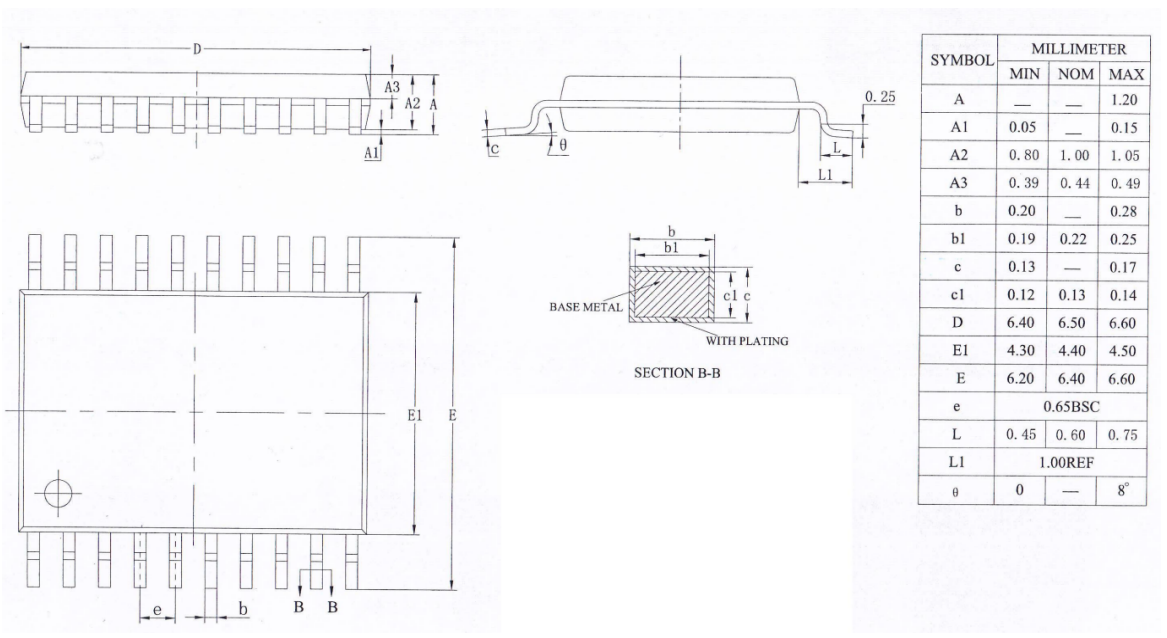

SYMBOL	MILLIMETER		
	MIN	NOM	MAX
A	—	—	1.20
A1	0.05	—	0.15
A2	0.80	1.00	1.05
A3	0.39	0.44	0.49
b	0.20	—	0.28
b1	0.19	0.22	0.25
c	0.13	—	0.17
c1	0.12	0.13	0.14
D	6.40	6.50	6.60
E1	4.30	4.40	4.50
E	6.20	6.40	6.60
e	0.65BSC		
L	0.45	0.60	0.75
L1	1.00REF		
θ	0	—	8°

FIGURE 17 : QFN20 Package dimensions

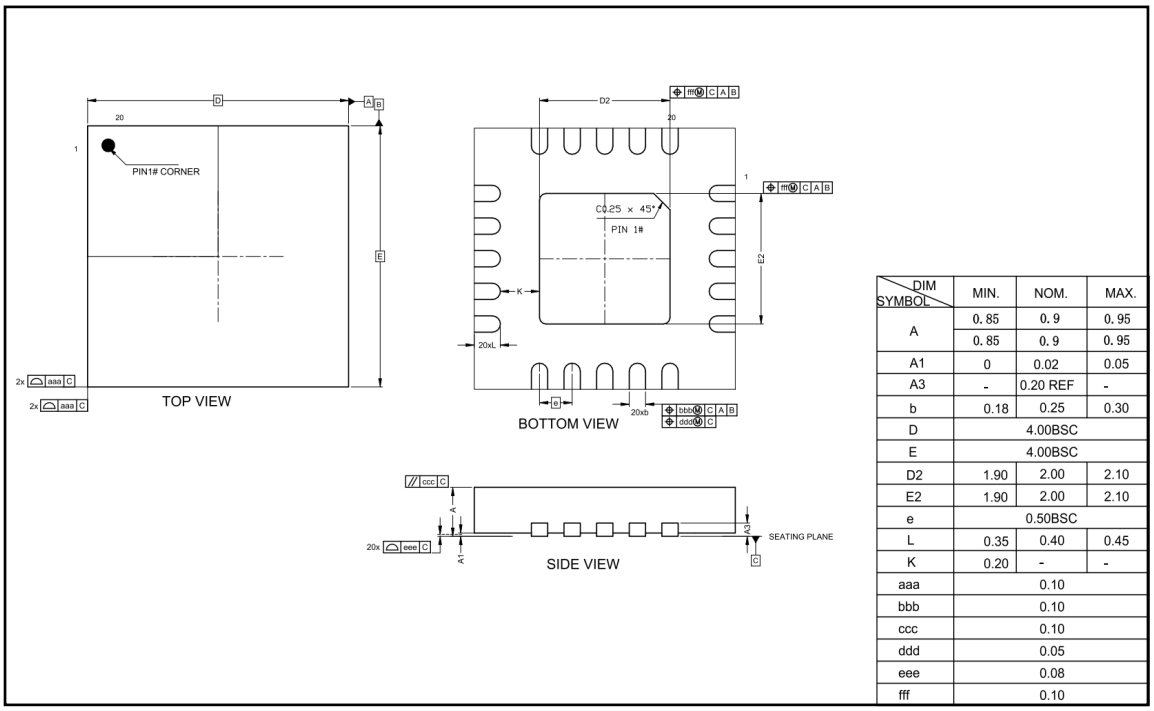

DIM SYMBOL	MIN.	NOM.	MAX.
A	0.85	0.9	0.95
	0.85	0.9	0.95
A1	0	0.02	0.05
A3	-	0.20 REF	-
b	0.18	0.25	0.30
D	4.00BSC		
E	4.00BSC		
D2	1.90	2.00	2.10
E2	1.90	2.00	2.10
e	0.50BSC		
L	0.35	0.40	0.45
K	0.20	-	-
aaa	0.10		
bbb	0.10		
ccc	0.10		
ddd	0.05		
eee	0.08		
fff	0.10		

20. ORDERING INFORMATION

Ordering Information

Part Number	Device Making	Package type	Body size (mm)	Temperate (°C)	MSL	Transpo Rt	Package Quantit
XD2515	XD2515	DIP18	22.90*6.50	-40 to +105	MSL3	Tube 20	800
XL2515	XL2515	SOP18	11.45*7.50	-40 to +105	MSL3	T&R	1000
XL2515-TSS	XL2515-TSS	TSSOP20	6.50*4.40	-40 to +105	MSL3	T&R	2500
XL2515QF20	XL2515QF20	QFN20	4.00*4.00	-40 to +105	MSL3	T&R	3300
XL2515-TSSQ	XL2515Q	TSSOP20	6.50*4.40	-40 to +125	MSL3	T&R	2500

Note： The XL2515-TSSQ is AEC-Q100 Qualified device. which is temperature ranges belong to Extended (Q): -40°C to +125°C

21. REVISION HISTORY

Revision	Date	Description of Change
V1.0	2019/10/1	Initial Release
V1.1	2024/8/27	Update package dimensions（FIGURE 14～17）
V2.0	2026/10/13	Added AEC-Q100 Qualified