VDS	RDS(on)Typ	ID@25℃
800V	380mΩ	10A

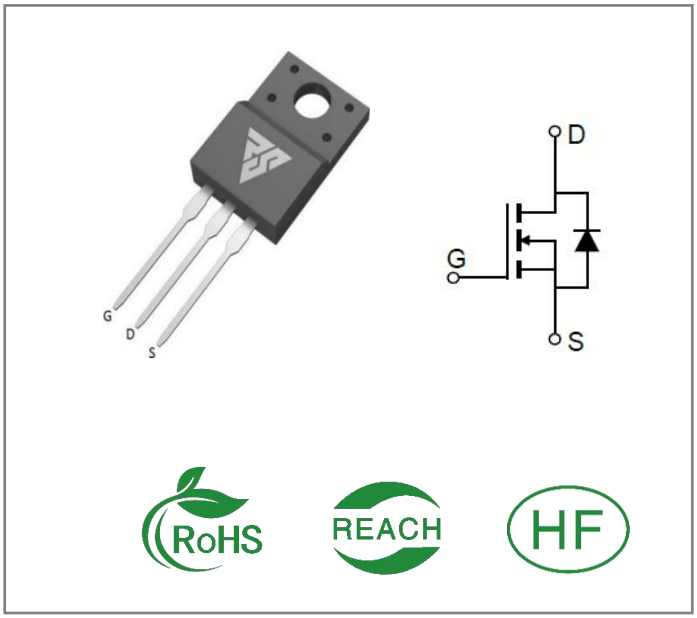

Applications:

- Switch Mode Power Supplies
- High Voltage DC/DC Converters
- Battery Chargers
- Motor Drives
- Pulsed Power Applications

Features:

- Wide Bandgap SiC MOSFET Technology
- Low On-Resistance with High Blocking Voltage
- Low Capacitances with High-Speed Switching
- Low Reverse Recovery (Qrr)
- Easy to Parallel and Simple to Drive
- Robust against Parasitic Turn on Even 0V Turn off Gate Voltage

Benefits:

- Reduced Switching Losses
- Increased System Switching Frequency
- Increased Power Density
- Reduction of Heat Sink Requirements
- Reduced EMI

Ordering Information

Part Number	Package	Marking	Packing	Qty.
RSM080380F	TO-220F	RSM080380F	Tube	50 PCS

Maximum Ratings (TJ= 25℃ unless otherwise specified)

Symbol	Parameter	Value	Unit	Test Conditions
VDS	Drain - Source Voltage	800	V	VGS=0V,ID=250μA
VGS	Gate - Source Voltage	-10/+22	V	Absolute maximum values
VGSOP	Recommended Operation Voltage of Gate to Source	0/+18	V	Recommended operational values
ID	Continuous Drain Current	10	A	VGS=15V, TC =25℃
IDM	Pulsed Drain Current	22	A	VGS=15V, TC =25℃
EAS	Single Pulsed Avalanche Energy	45	mJ	VDD=50V,L=10mH,IAS=3A
PD	Power Dissipation	24	W	TC =25℃, TJ =175℃
TJ, Tstg	Operating Junction and StorageTemperature	-55 to + 175	℃	

Copyright Reasunos

Electrical Characteristics (TJ= 25℃ unless otherwise specified)

Symbol	Parameter	Min.	Typ.	Max.	Unit	Test Conditions	Note
V(BR)DSS	Drain-Source Breakdown Voltage	800			V	VGS=0V,ID=250μA	
VGS(th)	Gate Threshold Voltage	2.7	3.6	4.5	V	VGS= VDS, ID=1.8mA	
IDSS	Zero Gate Voltage Drain Current			10	μA	VDS=800V, VGS=0V	
IGSS	Gate-Source Leakage Current			250	nA	VGS=18V, VDS=0V	
RDS(on)	Drain-Source on-state Resistance		380	520	mΩ	VGS=15V, ID =6A	
			280	400		VGS=18V, ID =6A	
Ciss	Input Capacitance		280		pF	VGS=0V, VDS=50V f=1MHz,Tj=25℃	
Coss	Output Capacitance		60				
Crss	Reverse Transfer Capacitance		8.2				
RG	Gate Resistance		3.8		Ω	f=1 MHz, VAC=25mV	
Qg	Total Gate Charge		21.3		nC	VDS=500V VGS=0/+15V ID=5A	
Qgs	Gate to Source Charge		6.7				
Qgd	Gate to Drain Charge		11.5				
td(on)	Turn-On Delay Time		24		ns	VDD=500V VGS =0/15V ID=5A RG(ext)=10Ω	
tr	Rise Time		42				
td(off)	Turn-Off Delay Time		26.8				
tf	Fall Time		76				

Reverse Diode Characteristics (TJ= 25℃ unless otherwise specified)

Symbol	Parameter	Typ.	Max	Unit	Test Conditions	Note
VSD	Diode Forward Voltage	3.5		V	VGS=0V, ISD =3A	
IS	Continuous Diode Forward Current		10	A	VGS=0V,Tj= 25℃	
trr	Reverse Recovery time	17.8		ns	VGS=0V,ISD=5A VR=500V,Tj=25℃ di/dt=530A/us	
Qrr	Reverse Recovery Charge	33.7		nC		
Irrm	Peak Reverse Recovery Current	3.5		A		

Thermal Characteristics (TJ= 25℃ unless otherwise specified)

Symbol	Parameter	Typ.	Max.	Unit	Test Conditions
RθJC	Thermal Resistance from Junction to Case	6.25		℃/W	

Copyright Reasunos

Typical Feature Curve

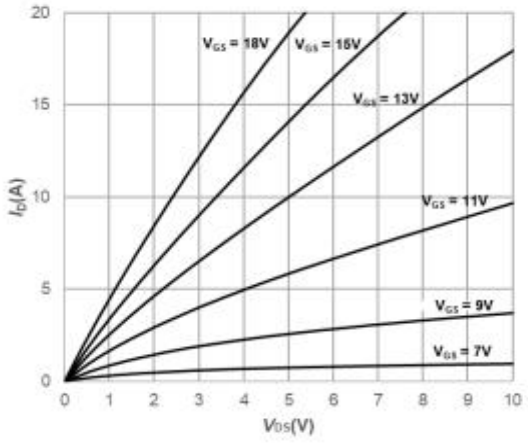

Fig1. Output Characteristics T_j=25℃

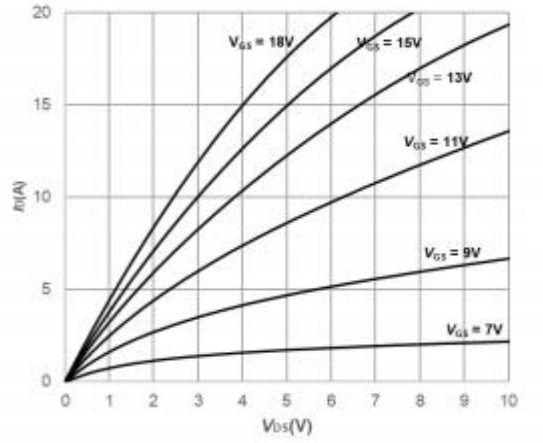

Fig2. Output Characteristics T_j=175℃

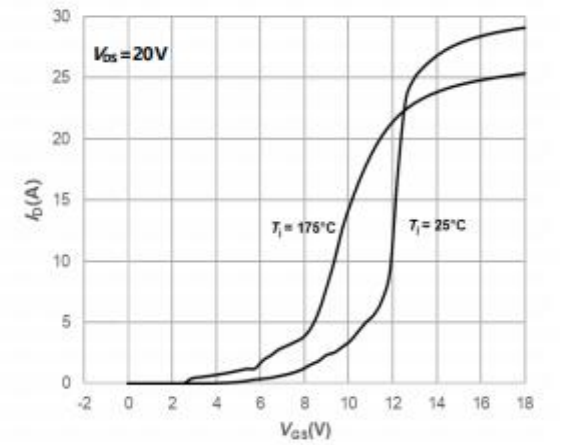

Fig3. Typical Transfer Characteristics

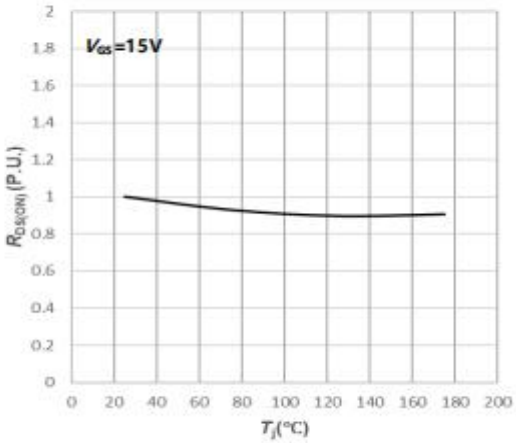

Fig4. Normalized On-Resistance vs. Temperature

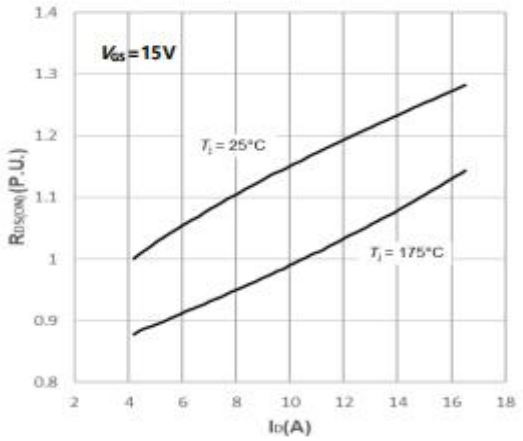

Fig5. Normalized On-Resistance vs. Drain Current For Various Temperatures

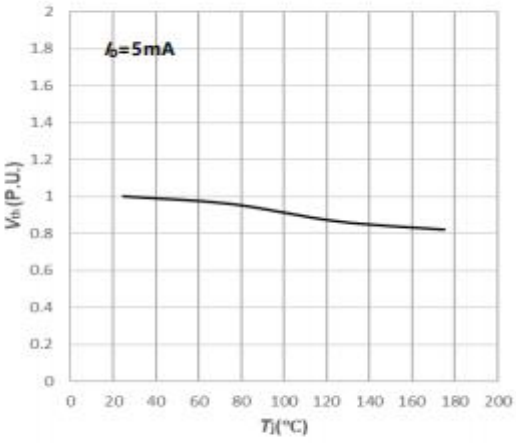

Fig6. Normalized Threshold Voltage vs. Temperature

Copyright Reasunos

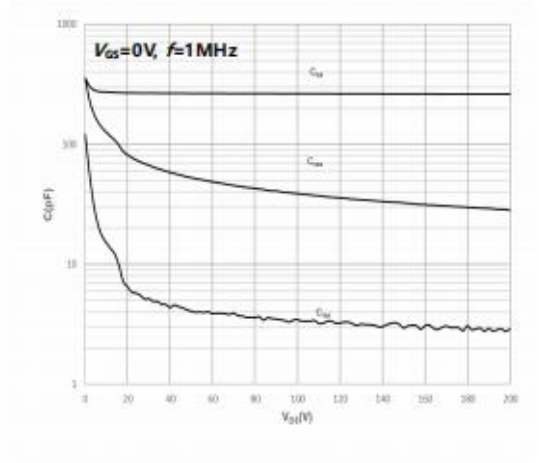

Fig7. Capacitances vs. Drain-Source Voltage (0-200V)

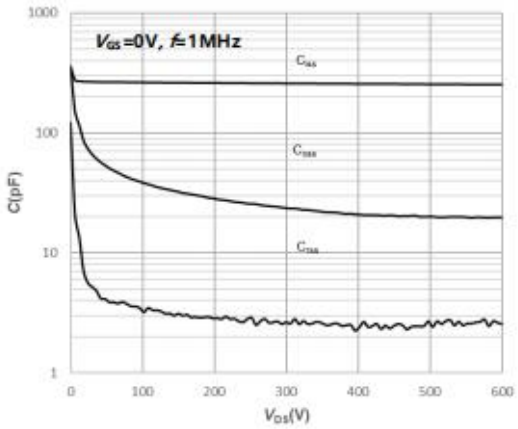

Fig8. Capacitances vs. Drain-Source Voltage (0-600V)

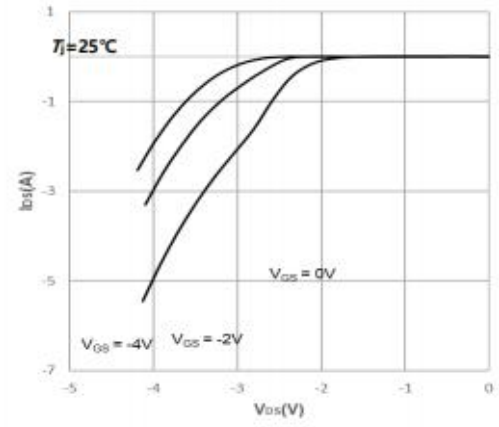

Fig9. Body Diode Characteristics

Copyright Reasunos

Package outline drawing(TO-220F Unit: mm)

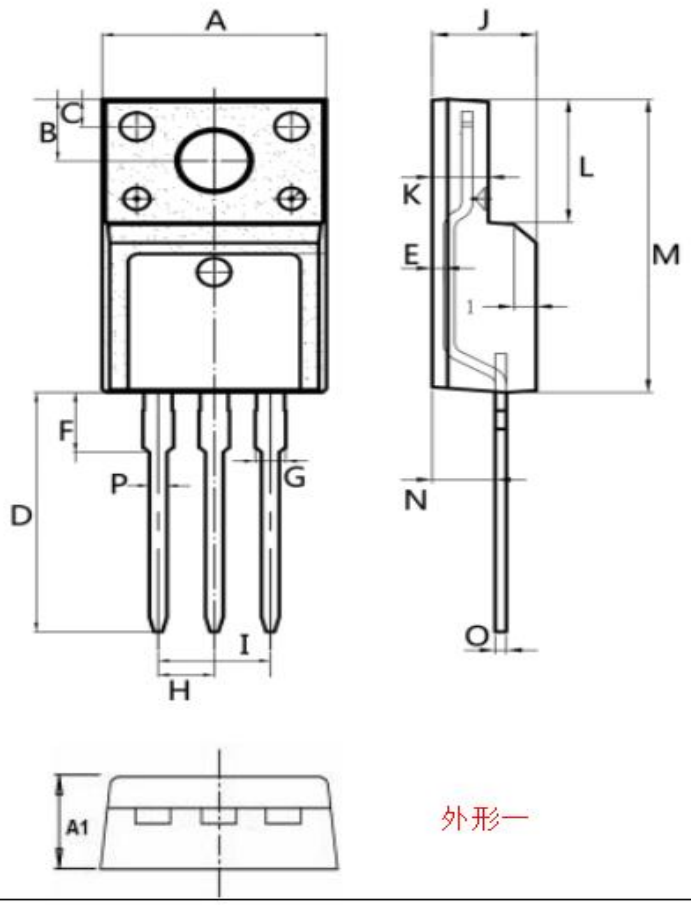

外形一

Dim.	Min.	Max.
A	9.95	10.36
A1	4.5	5.0
B	2.95	3.25
C	1.25	1.45
D	12.60	13.60
E	0.40	0.60
F	2.8	3.5
G	1.30	1.45
H	(2.54)	
I	(5.08)	
J	4.60	4.75
K	2.45	2.65
L	6.5	6.8
M	15.4	16.0
N	2.25	3.05
O	0.45	0.55
P	0.70	0.90
All Dimensions in millimeter		

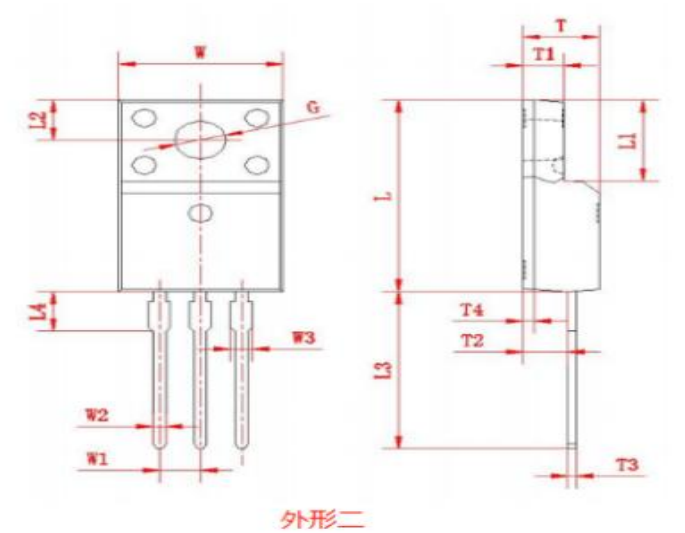

外形二

Dim.	Min.	Max.
W	9.95	10.36
W1	(2.54)	
W2	0.70	0.90
W3	1.25	1.47
L	15.67	16.07
L1	6.48	6.88
L2	3.2	3.4
L3	12.6	13.6
L4	(3.23)	
T	4.50	4.90
T1	2.34	2.74
T2	2.25	2.95
T3	0.45	0.60
T4	(0.70)	
G	3.08	3.28
All Dimensions in millimeter		

Copyright Reasunos

Disclaimers:

Reasunos Semiconductor Technology Co.Ltd (Reasunos) reserves the right to make changes without notice in order to improve reliability,function or design and to discontinue any product or service without notice .Customers should obtain the latest relevant information before orders and should verify that such information in current and complete.All products are sold subject to Reasunos's terms and conditions supplied at the time of orderacknowledgement.

Reasunos Semiconductor Technology Co.Ltd warrants performance of its hardware products to the speciffications at the time of sale.Testing,reliability and quality control are used to the extene Reasunos deems necessary to support this warrantee. Except where agreed upon by contr- actual agreement,testing of all parameters of each product is not necessarily performed.

Reasunos Semiconductor Technology Co.Ltd does not assume any liability arising from the use of any product or circuit designs described herein.Customers are responsible for their products and applications using Reasunos's components.To minimize risk,customers must provide adequate design and operating safeguards.

Reasunos Semiconductor Technology Co.Ltd does not warrant or convey any license eith- er expressed or implied under its patent rights,nor the rights of others.Reproduction of inform- ation in Reasunos's data sheeets or data books is permissible only if reproduction is without modification oralteration.Reproduction of this information with any alteration is an unfair and deceptive business practice. Reasunos Semiconductor Technology Co.Ltd is not responsi- ble or liable for such altered documentation.

Resale of Reasunos's products with statements different from or beyond the parameters stated by Reasunos Semiconductor Technology Co.Ltd for that product or service voids all exp- ress or implied warrantees for the associated Reasunos's product or service and is unfair and deceptive business practice. Reasunos Semiconductor Technology Co.Ltd is not responsi- ble or liable for such statements.

Life Support Policy:

Reasunos Semiconductor Technology Co.Ltd's Products are not authorized for use as cri- tical components in life support devices or systems without the expressed written approval of Reasunos Semiconductor Technology Co.Ltd.

As used herein:

1. Life support devices or systems are devices or systems which: a.are intended for surgical implant into the human body, b.support or sustain life,
c.whose failuer to when properly used in accordance with instructions for used provided in the laeling,can be reasonably expected to result in significant injury to the user.

2.A critical component is any component of a life support device or system whose failure to system whose failure to perform can be reasonably expected to cause the failure of the life support device or system,or to affect its safety or effectiveness.

Copyright Reasunos