V_{DS}	$R_{DS(on)typ}$	I_D@25℃
800V	540mΩ	7A

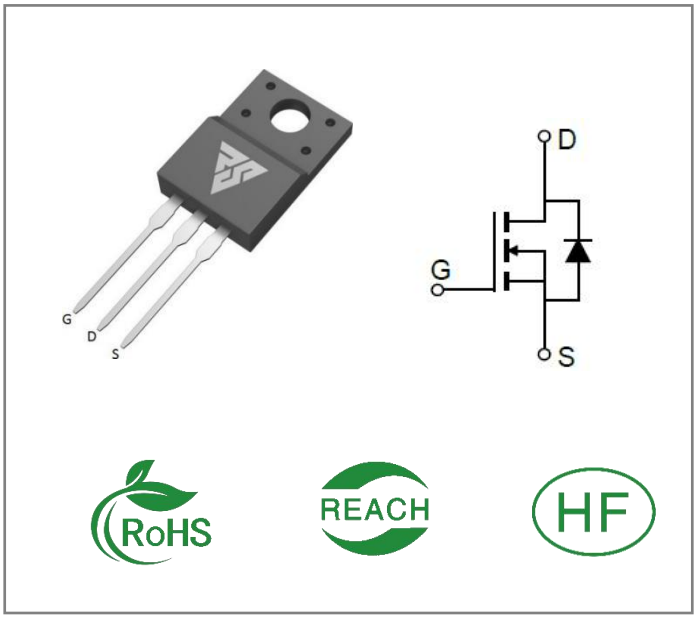

Applications:

- Switch Mode Power Supplies
- High Voltage DC/DC Converters
- Battery Chargers
- Motor Drives
- Pulsed Power Applications

Features:

- Wide Bandgap SiC MOSFET Technology
- Low On-Resistance with High Blocking Voltage
- Low Capacitances with High-Speed Switching
- Low Reverse Recovery (Q_{rr})
- Easy to Parallel and Simple to Drive
- Robust against Parasitic Turn on Even 0V Turn off Gate Voltage

Benefits:

- Reduced Switching Losses
- Increased System Switching Frequency
- Increased Power Density
- Reduction of Heat Sink Requirements
- Reduced EMI

Ordering Information

Part Number	Package	Marking	Packing	Qty.
RSM080540F	TO-220F	RSM080540F	Tube	50 PCS

Maximum Ratings （TJ= 25℃ unless otherwise specified）

Symbol	Parameter	Value	Unit	Test Conditions	Note
V_{DS}	Drain - Source Voltage	800	V	V_{GS}=0V,I_D =250μA	
V_{GS}	Gate - Source Voltage	-10/+22	V	Absolute maximum values	
V_{GSop}	Gate - Source Voltage	0/+18	V	Recommended operational values	
I_D	Continuous Drain Current[1]	7 5	A	V_{GS}=15V,T_C =25℃ V_{GS}=15V,T_C =175℃	
I_{DM}	Pulsed Drain Current	14	A	V_{GS}=15V,T_C =25℃	
P_D	Power Dissipation	24	W	T_C =25℃,T_J =175℃	
T_J, T_{stg}	Operating Junction and StorageTemperature	-55 to + 175	℃		

Copyright Reasunos

Electrical Characteristics (TJ= 25℃ unless otherwise specified)

Symbol	Parameter	Min.	Typ.	Max.	Unit	Test Conditions	Note
$V_{(BR)DSS}$	Drain-Source Breakdown Voltage	800			V	V_{GS}=0V,I_D =250μA	
$V_{GS(th)}$	Gate Threshold Voltage	2.7	3.6	4.5	V	V_{GS}= V_{DS}, I_D=1.8mA	
I_{DSS}	Zero Gate Voltage Drain Current		1	50	μA	V_{DS}= 800V, V_{GS}=0V TJ =25℃	
I_{GSS}	Gate-Source Leakage Current			250	nA	V_{GS}=18V, V_{DS}= 0V	
$R_{DS(on)}$	Drain-Source on-state Resistance		540	700	mΩ	V_{GS}=15V, I_D =3.6A	
			380	500		V_{GS}=18V, I_D =3.6A	
C_{iss}	Input Capacitance		200		pF	V_{GS}=0V, V_{DS}=50V f=1MHz，T_J=25℃	
C_{oss}	Output Capacitance		45				
C_{rss}	Reverse Transfer Capacitance		6				
$t_{d(on)}$	Turn-On Delay Time		15		ns	V_{DD} =500V V_{GS} =0/18 V I_D = 3.6A $R_{G(ext)}$ = 10Ω	
t_r	Rise Time		39				
$t_{d(off)}$	Turn-Off Delay Time		16				
t_f	Fall Time		69				
$R_{G(int)}$	Internal Gate Resistance		5.5		Ω	f=1 MHz	
Q_{gs}	Gate to Source Charge		95		nC	V_{DS}=500V V_{GS}=0/15V I_D=3.6A T_J=25℃	
Q_{gd}	Gate to Drain Charge		30				
Q_g	Total Gate Charge		27				

Copyright Reasunos

Reverse Diode Characteristics （TJ= 25℃ unless otherwise specified）

Symbol	Parameter	Typ.	Max	Unit	Test Conditions	Note
V_{SD}	Diode Forward Voltage	3.5		V	V_{GS}=0V, I_S =3A T_J = 25℃	
I_S	Continuous Diode Forward Current	7		A	V_{GS}=0V,T_J= 25℃	
t_{rr}	Reverse Recovery time	11		ns	V_{GS}=0V I_{SD}=3.6A V_R=500V di/dt=850 A/μs T_J= 25℃	
Q_{rr}	Reverse Recovery Charge	35		nC		
I_{rrm}	Peak Reverse Recovery Current	5.5		A		

Thermal Characteristics （TJ= 25℃ unless otherwise specified）

Symbol	Parameter	Typ.	Unit	Test Conditions	Note
$R_{\theta JC}$	Thermal Resistance from Junction to Case	6.38	℃/W		

Copyright Reasunos

Typical Feature Curve

Figure 1. Output Characteristics Tj=25℃

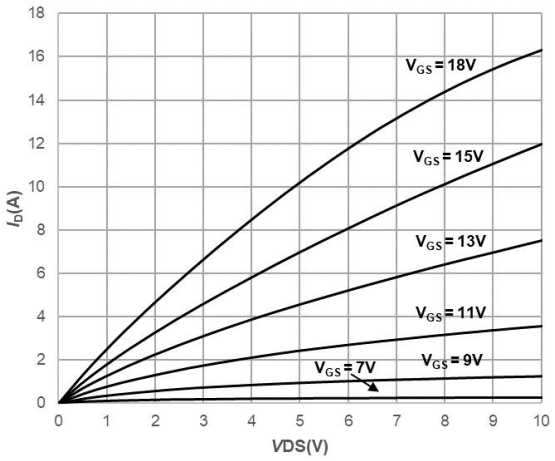

Figure 2. Output Characteristics Tj=175℃

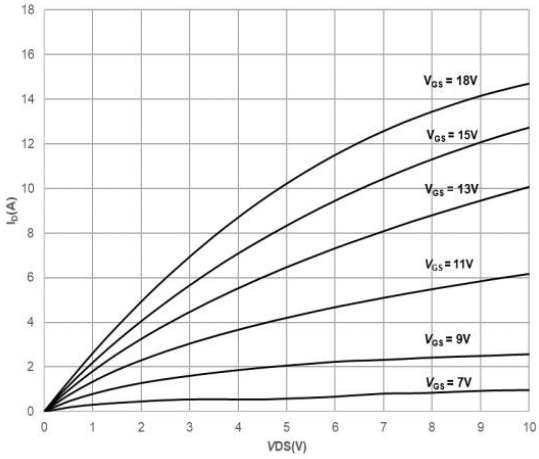

Figure 3. Output Characteristics Tj=-40℃

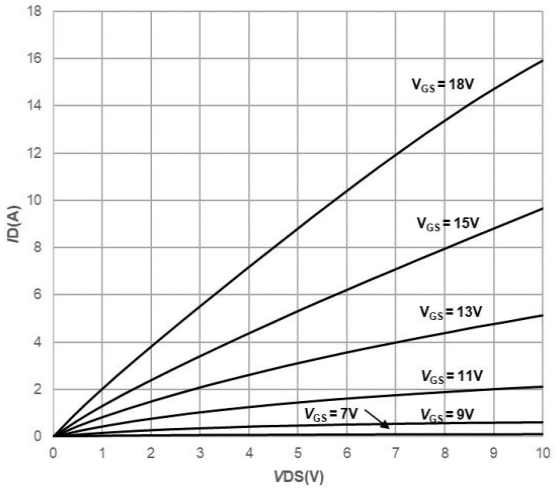

Figure 4. Typical Transfer Characteristics

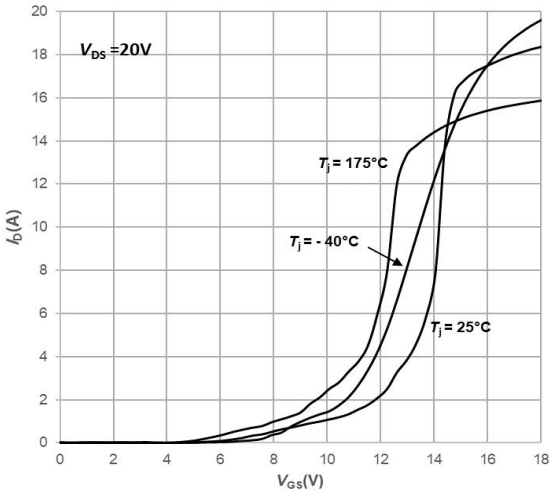

Figure 5. Normalized On-Resistance vs. Temperature

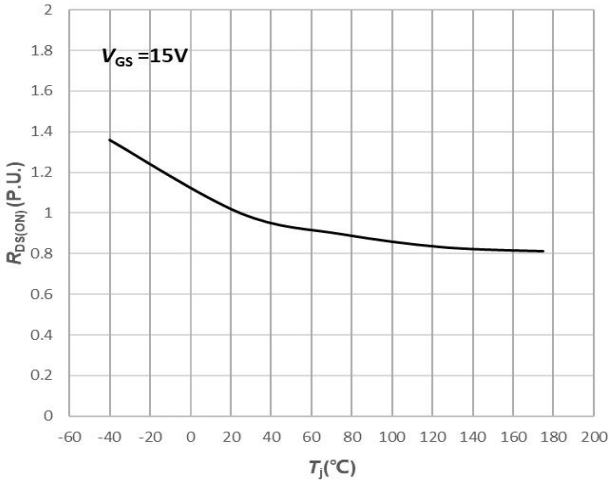

Figure 6. Normalized On-Resistance vs. Drain Current For Various Temperatures

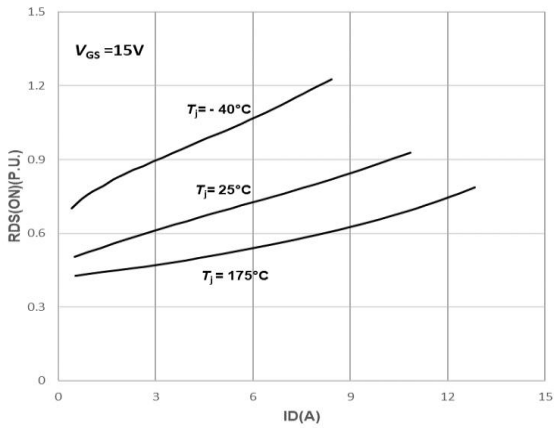

Copyright Reasunos

Fig7. Normalized Threshold Voltage vs. Temperature

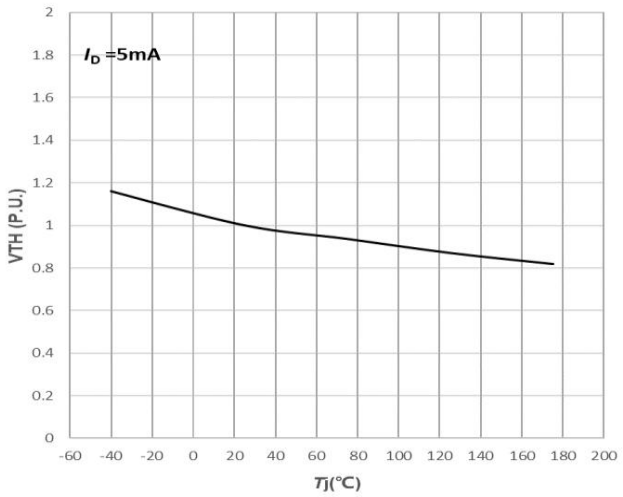

Figure 8. Capacitances vs. Drain-Source Voltage (0-200V)

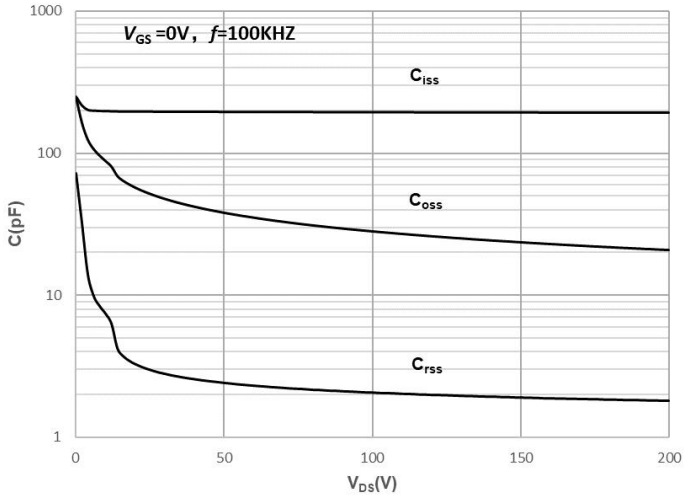

Figure 9. Capacitances vs. Drain-Source Voltage (0-650V)

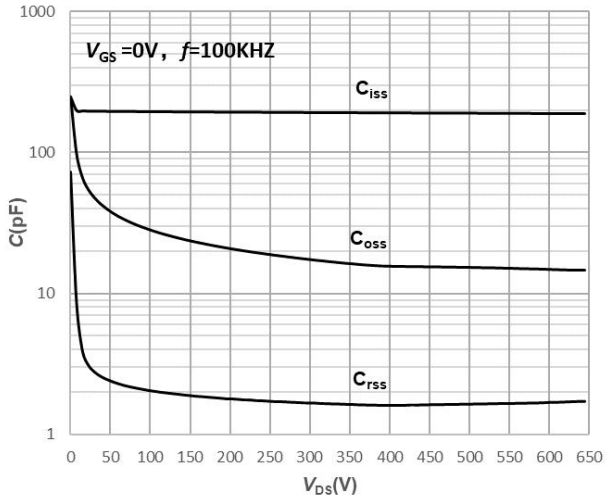

Fig10. Body Diode Characteristics

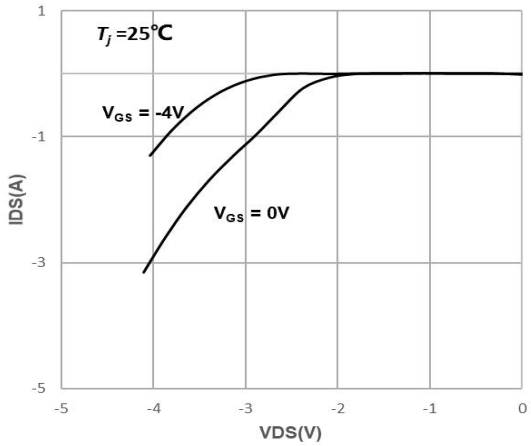

Copyright Reasunos

Package outline drawing(TO-220F Unit: mm)

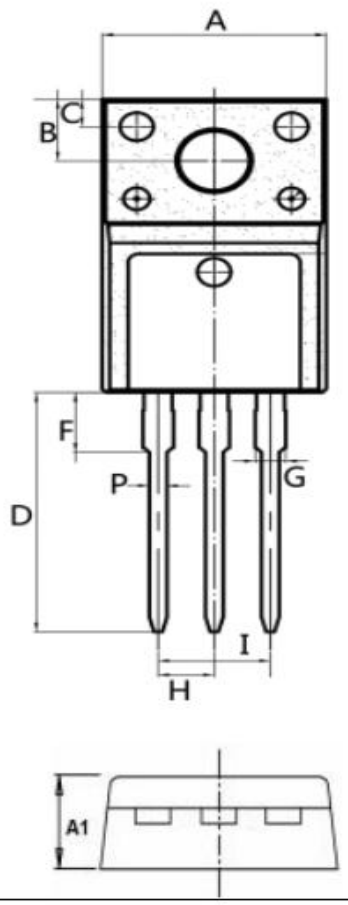

外形一

Dim.	Min.	Max.
A	9.95	10.36
A1	4.5	5.0
B	2.95	3.25
C	1.25	1.45
D	12.60	13.60
E	0.40	0.60
F	2.8	3.5
G	1.30	1.45
H	(2.54)	
I	(5.08)	
J	4.60	4.75
K	2.45	2.65
L	6.5	6.8
M	15.4	16.0
N	2.25	3.05
O	0.45	0.55
P	0.70	0.90
All Dimensions in millimeter		

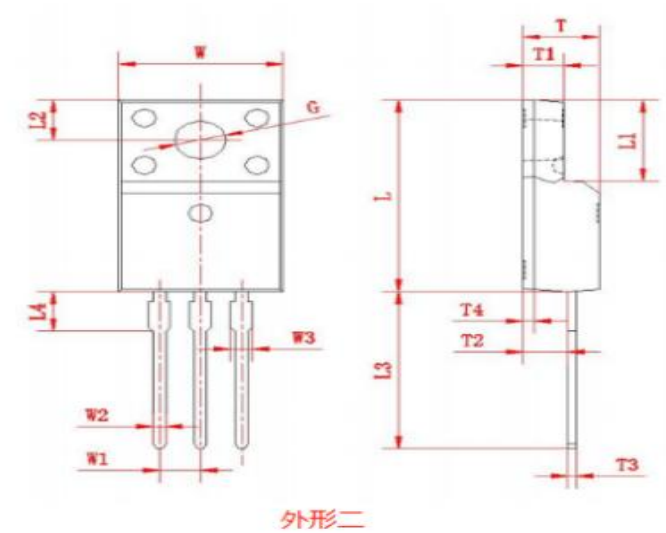

外形二

Dim.	Min.	Max.
W	9.95	10.36
W1	(2.54)	
W2	0.70	0.90
W3	1.25	1.47
L	15.67	16.07
L1	6.48	6.88
L2	3.2	3.4
L3	12.6	13.6
L4	(3.23)	
T	4.50	4.90
T1	2.34	2.74
T2	2.25	2.95
T3	0.45	0.60
T4	(0.70)	
G	3.08	3.28
All Dimensions in millimeter		

Copyright Reasunos

Disclaimers:

Reasunos Semiconductor Technology Co.Ltd (Reasunos) reserves the right to make changes without notice in order to improve reliability,function or design and to discontinue any product or service without notice .Customers should obtain the latest relevant information before orders and should verify that such information in current and complete.All products are sold subject to Reasunos's terms and conditions supplied at the time of orderacknowledgement.

Reasunos Semiconductor Technology Co.Ltd warrants performance of its hardware products to the speciffications at the time of sale.Testing,reliability and quality control are used to the extene Reasunos deems necessary to support this warrantee. Except where agreed upon by contr- actual agreement,testing of all parameters of each product is not necessarily performed.

Reasunos Semiconductor Technology Co.Ltd does not assume any liability arising from the use of any product or circuit designs described herein.Customers are responsible for their products and applications using Reasunos's components.To minimize risk,customers must provide adequate design and operating safeguards.

Reasunos Semiconductor Technology Co.Ltd does not warrant or convey any license eith- er expressed or implied under its patent rights,nor the rights of others.Reproduction of inform- ation in Reasunos's data sheeets or data books is permissible only if reproduction is without modification oralteration.Reproduction of this information with any alteration is an unfair and deceptive business practice. Reasunos Semiconductor Technology Co.Ltd is not responsi- ble or liable for such altered documentation.

Resale of Reasunos's products with statements different from or beyond the parameters stated by Reasunos Semiconductor Technology Co.Ltd for that product or service voids all exp- ress or implied warrantees for the associated Reasunos's product or service and is unfair and deceptive business practice. Reasunos Semiconductor Technology Co.Ltd is not responsi- ble or liable for such statements.

Life Support Policy:

Reasunos Semiconductor Technology Co.Ltd's Products are not authorized for use as cri- tical components in life support devices or systems without the expressed written approval of Reasunos Semiconductor Technology Co.Ltd.
As used herein:
1. Life support devices or systems are devices or systems which: a.are intended for surgical implant into the human body, b.support or sustain life,
c.whose failuer to when properly used in accordance with instructions for used provided in the laeling,can be reasonably expected to result in significant injury to the user.

2.A critical component is any component of a life support device or system whose failure to system whose failure to perform can be reasonably expected to cause the failure of the life support device or system,or to affect its safety or effectiveness.

Copyright Reasunos