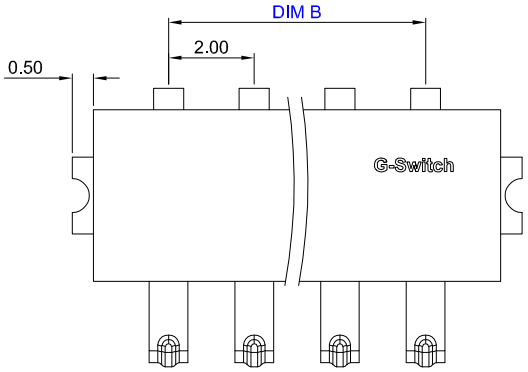

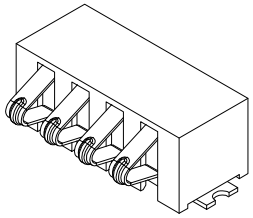

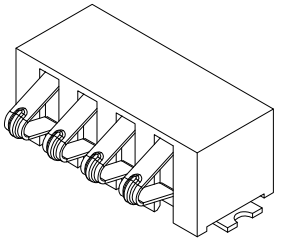

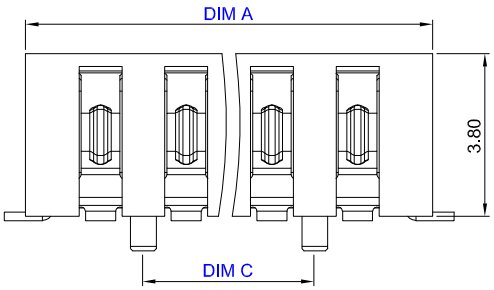

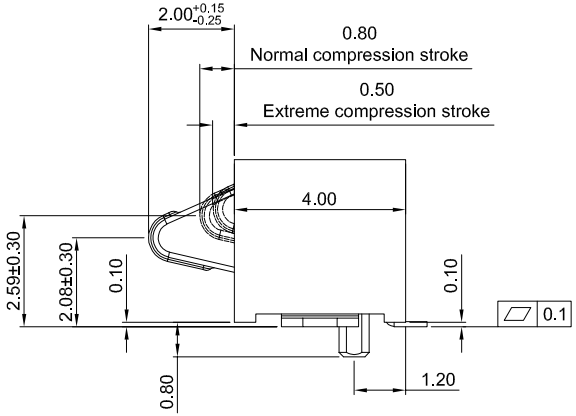

GT-BT P 200 XX - 0380 A - 021 A

- **G-Switch**
- **Series** BT: Battery
- **Type** P: Plug
- **Pitch** 200=2.00
- **Pin Q' PY** 03~06
- **Height** 0380=3.8
- **Detail** A:With olumn
- **Serial code**
- **Detail**

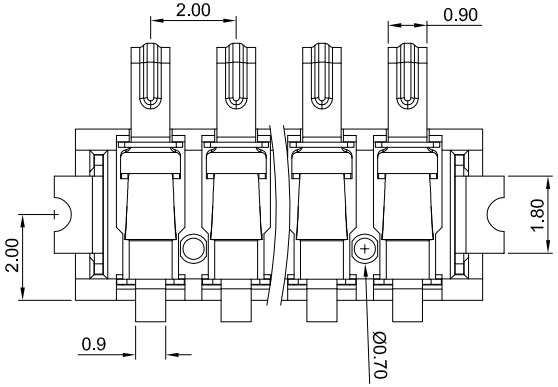

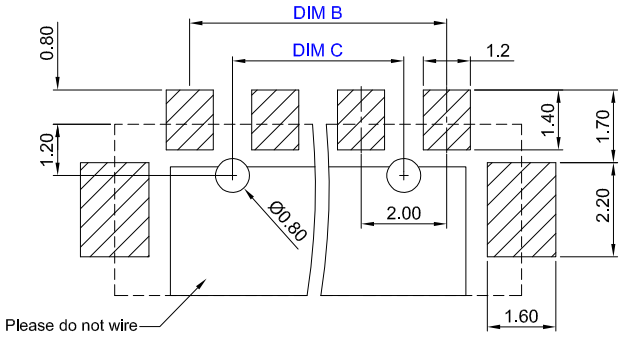

PCB REFERENCE DIAGRAM
TOLERANCE:±0.05

G-Switch Specification:

1.Current rating: 3A
2.Rated Voltage: 12V DC
3.Insulation resistance: 100MΩ min
4.Contact resistance: 30mΩ max
5.Dielectric strength: 500V RMS
6.Durability: 5000cycles
7.Operating temperature range: -40°C ~ +85°C

NO.	PART NAME	MATERIAL	REMARK
2	CONTACT	PHOSPHOR BRONZE	Au ON CONTACT AREA
1	HOUSING	LCP,94V-0	BLACK

Ordering Information:

Circuit	Dimensions(mm)		
	DIM A	DIM B	DIM C
03	7.5	4.0	2.0
04	9.5	6.0	4.0
05	11.5	8.0	6.0
06	13.5	10.0	8.0

Pb Process Capable | RoHS Compliant EU RoHS Standards | Compliant Halogen Free

SCALE: 1:1 UNIT: mm	Title:	Horizontal Pitch2.0 Battery Conn SMT L×4.0×H3.8mm	
SIZE: A4			
Unless otherwise General Tolerance: X ±0.40 X.x ±0.30 X.xx ±0.20 X° ±5° X.x° ±3°	Molde Code:	GT-BTP200XX-0380A-021A	
DRAWN: Wu	CHECKED: Xia	APPROVED: Chen	DATE: 2024.12.12
REV: A0	SHEET: 1/1		

品赞科技 b-Switch www.dg-switch.com