承 認 書

SPECIFICATION FOR APPROVAL

客戶名稱及編號: CUSTOMER:	K4625
產品名稱: DESCRIPION:	Sub-Miniature Toggle Switch
產品型號: MODEL NO:	ST-0-102-A01-T000-LF
本司料號: OUR PART NO:	SM00087ZNR
客戶料號: CUSTOMER PART NO:	C1788487
承認書編號: SPECIFICATION NO:	
日期: DATE:	2026-11-13

WRITTEN 制定: APPROVAL 審核:

承認書附頁：圖紙,規格書

承認欄 CUSTOMER APPROVAL SIGNATURE	
MODEL NO.:	APPROVED NO.:
PART NO.:	DATE:

源 豐 電 子（深圳）有 限 公 司

YUEN FUNG ELECTRONICS（SHEN ZHEN）CO.LTD

Tel:0755-33809286

YuenFung Electronic(shenzhen)CO.ltd

源丰电子(深圳)有限公司

SPECIFICATION 规格书	WRITTEN 制定：雷艳平	发布日期：2026/11/13
MODELSERIESNAME系列名称:	SUB-MINIATURE TOGGLE SWITCH	
MODEL NO 产品型号:	ST-0-102-A01-T000-LF	
1.RATING 额定值:	3A 125VAC 1A 250VAC	

2.ELECTRICAL CHARACTERISTICS 电气性能规格:

ITEM项目		TEST CONDITIONS 测试条件	PERFORMANCE 表现
2.1	CONTACT RESISTANCE 接触电阻	MEASURED AT SMALL CURRENT(100mA OR LESS)1000Hz 在微小电流(100mA)以下测试.	20mΩMAX 20毫欧以下
2.2	INSULATION RESISTANCE 绝缘电阻	APPLY A VOL TAGE OF 500V DC FOR 1 MIN.TO FOLLOWING PORTIONS AFTER WHICH MEASUREMENT SHALL BE MADE: (1)BETWEEN BODY AND CONDUCTOR. (2)BETWEEN CONDUCTORS NOT TO BE CONTACT. 输入500V DC电压1分钟,按以下接触方法测试: (1)接触端子之间. (2)塑胶体与端子之间.	1000MΩ MIN 1000兆欧以上
2.3	DIELECTRIC STRENGTH 耐电压	AC1000V(50-60Hz)FOR 1 MIN： (1)BETWEEN TERMINALS. (2)BETWEEN INDIVDUAL TERMINALS AND FRAME. 输入AC1000V (50-60Hz)电压1分钟,按以下接触方法测试: (1)接触端子之间.(2)塑胶体与端子之间.	NO DAMAGE TO PARTS ARCING,OR BREAKDOWN ETC. 没有绝缘破坏等异常.
3	PRACTICAL TEMPERATURE RANGE 使用温度范围	AT-30℃~+85℃ 在-30℃~+85℃温度内使用	
4	STANDARD ATMOSPHEIC CONDITIONS 测试标准状态	UNLESS OTHERWISE SPECIFIED. THE STANDARD RANGE OF ATMOSPHERIC CONDITIONS FOR MAKING MEASUREMENTS AS FOLLOWS: (1)AMBIENT TEMPERATURE:5℃TO35℃. (2)RELATIVE HUMIDITY:45%TO85%. 在没有指定的情况下测试温度,湿度如下: (1)温度为5℃-35℃.(2)湿度为45%-85%.	

5.MECHANICAL CHARACTERISTICS 机械性能规格:

ITEM项目		TEST CONDITIONS 测试条件	PERFORMANCE 表现
5.1	LIFE TEST 寿命测试	1.ENDURANCE WITHOUT LOADING:THE TEST SHOULD BE TAKEN AT A SPEED OF 6-8 CYCLES FOR 1 MIN;1.5 TIMES OF THE STANDARD FORCE 无负荷:每分钟6-8回速度测试压力不得超过标准力度1.5倍.进行测试 2.ENDURANCE WITH LOADING: THE TEST SHOULD BE TAKEN ATA SPEED OF 6-8 CYCLES FOR 1 MIN; OPERATE PRESSURE SHOULD BE UNDER THE1.5 TIMES OF THE STANDARD FORCE 负荷:在负荷的条件下以每分钟6-8回的速度压力不得超过标准力度1.5倍.进行测试	ELECTRICAL LIFE： 1A 250V 6,000 CYCLES MIN 电气寿命： 1A 250V 6,000次以上 MECHANICAL LIFE：40,000 CYCLES 机械寿命：40,000次

6.DURABILITY 耐久性:

ITEM项目		TEST CONDITIONS 测试条件	PERFORMANCE 表现
6.1	SOLDERABILITY TEST 可焊性试验	THE TOP OF THE TERMINALS SHALL BE DIPPED 2mmINTHE SOLDER BATH OF 230±10℃ FOR 3±0.5 SECONDS. 端子顶部被浸入锡焊池中2mm深,温度为230±10℃,时间为3±0.5秒.	THE AREA OF SOLDERING, SHOULD BE OVER75%. 焊接面积要有75%以上.

6.2	WELDING CONDITIONS 焊接条件	(1) THE TEMPERATURE OF MANUAL WELDING IS CONTROLLED AT 350±5 ℃ AND THE TIME IS ≤3 SECOND. (2) THE TEMPERATURE OF WELDING FURNACE IS CONTROLLED AT 260±5℃ AND THE WELDING TIME TIME IS ≤3 SECOND. NOTE: THE ABOVE MENTIONED CONDITIONS ARE THE TEMPERATURE OF THE PWB SURFACE ON THE PARTS. DUE TO THE DIFFERENT MATERIALS, SIZES AND THICKNESS OF THE PWB, THE TEMPERATURE OBTAINED FROM THE SWITCH SURFACE OF THE PWB WILL VARY GREATLY. THEREFORE, BE CAREFUL NOT TO LET THE TEMPERATURE OF THE SWITCH SURFACE EXCEED 260℃ CAUTION: THE CONDITION MENTIONED ABOVE IS A TEMPERATURE ON THE PWB SURFACE ON WHICH PARTS ARE MOUNTED. THERE ARE CASES WHERE PWB TEMPERATURE GREATLY DIFFERS FROM SWITCH'S SURFACE TEMPERATURE DEPENDING ON PWB MATERIAL, SIZE, THICKNESS, ETC. THE SWITCH'S SURFACE TEMPERATURE SHALL NOT ALLOWED TO EXCEED 260℃ (3) OTHER PRECAUTIONS ARE AS FOLLOWS: 1.FOLLOWING THE SOLDERING PROCESS, DO NOT TRY TO CLEAN THE SWITCH WITH A SOLVENT OR THE LIKE. 2.SAFEGUARD THE SWITCH ASSEMBLY AGAINST FLUX PENETRATION FROM ITS TOPSIDE. (1)手工焊接的温度控制在350±5℃，时间≤3秒 (2)焊炉焊接的温度控制在260±5℃，过炉时间为≤3秒。注意：上述条件为零件上表面的PWB温度，由于PWB的材料、尺寸、厚度等不同，PWB的开关表面获得的温度会有很大的变化，因此，小心不要让开关表面温度超过260℃ (3) 其他注意事项： 1. 进行焊接过程中，不可以用溶剂或类似品清洗开关 2. 防止助焊剂从开关的顶端渗入 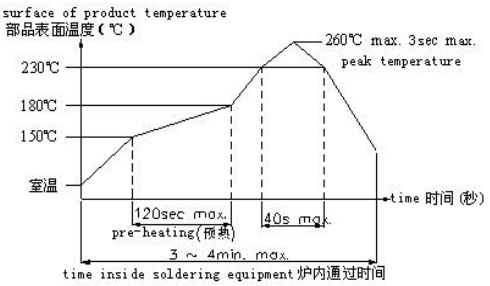	WITHOUT DEFORMATION OF CASE OR EXCESSIVE LOOSENESS OF TEMINALS ELECTRICAL CHARACTERISTICS SHALL BE SATISFIED. 本体无变形,能满足于机械,电器性能.
6.3	HEAT TEST 耐热试验	THE SWTICH SHALL BE STORED AT A TEMPERATURE OF 85±2℃ FOR 96 HOURS.THEN THE SWITCH SHALLBE MAINTAINED AT STANDARD ATMOSPHERICCONDITION FOR 1 HOUR AFTER WHICHMEASUREMENT SHALL BE MADE. 放置在温度85±2℃中测试96小时后,再放置正常室温中1小时来测定.	THERE SHALL BE NO DEFORMATION OR CRACKSINMOLDED PART 外观无异常,满足于机械,电器性能.
6.4	COLD TEST 耐冷试验	THE SWITCH SHALL BE STORED AT A TEMPERATURE OF -25±3℃ FOR 96 HOURS,THEN THE SWITCH SHALL BE MAINTAINED AT STANDARD ATMOSPHERIC CONDITION FOR 1 HOUR AFTER WHICH MEASUREMENT SHALL BE MADE. 放置在温度-25±3℃中96小时后,再放置常温中1小时来进行测试.	
6.5	HUMIDITY TEST 潮湿试验	THE SWITCH SHALL BE STORED AT A TEMPERATURE OF 40±2℃ AND A HUMIDITY OF 90%TO95% FOR 96 HOURS.THEN THE SWITCH SHALL BE MAINTAINED AT STANDARD ATMOSPHERE CONDITION FOR 1 HOUR AFTER WHICH MEASUREMENT SHALL BE MADE. 放置40±2℃试验的相对湿度为90%-95%环境中96小时后,再将样板放在正常环境1小时后进行测试.	
6.6	SALT SPRAY TEST 盐雾测试	TEST ROOM TEMPERATURE 26 °C / HUMIDITY 26 °C, PH VALUE 6.2 FOR 12 HOURS WITH 5 % SALT WATER CONCENTRATION AND SALT MIST SETTLING ML/80 CM2H LEVEL 1.5 以5%盐水浓度、盐雾沉降ml/80cm2h量1.5测试室内温度26℃/湿度26℃、PH值6.2条件下测试12小时	SALT FOG 12H PRODUCTS WITHOUT ABNORMAL CONDITIONS/TEST PASS REQUIREMENTS 盐雾12H产品无异常情况/测试通过要求

文件编号：SP-D-007

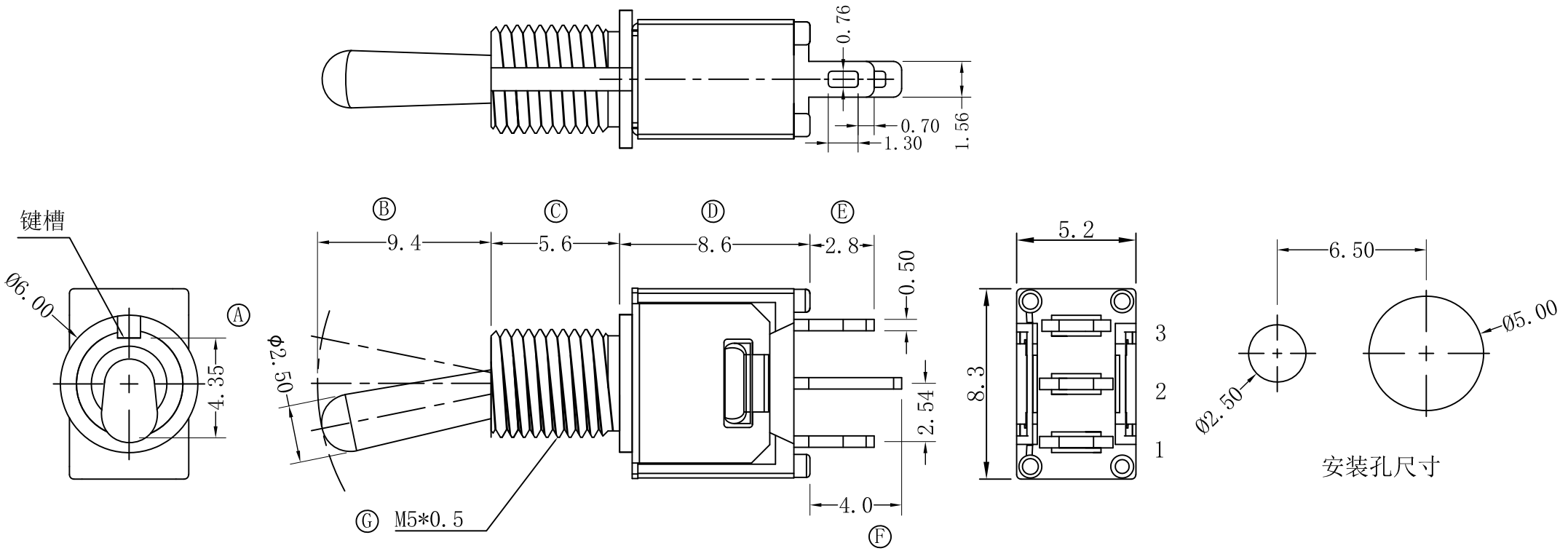

标注：Ⓐ-Ⓖ 尺寸的重点检验尺寸

手柄位置及导通端子示意图

Model NO.	POS. 1	POS. 2	POS. 3
			
102	ON	NONE	ON
SCHEMATIC	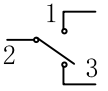	N/A	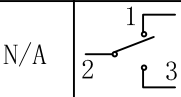

Technical characteristics

SPECIFICATION:3 A max. @ 125 VAC.
1 A max. @ 250 VAC.
MECHANICAL LIFE:40,000 make-and-break cycles.
CONTACT RESISTANCE:20mΩ max.initial @2-4VDC
100mA for both silver.
INSULATION RESISTANCE: 1000 MΩ min.
DIELECTRIC STRENGTH: 1000 VAC min.
OPERATING TEMPERATURE: -30°C to +85°C.

Materials

CASE: PPA (UL 94V-0)
HOUSING：Stainless Steel.
ACTUATOR：Alloy,chrome plated.
BUSHING：Alloy,nickel plated.
CONTACT/TERMINALS：Copper alloy silver plated.
RoHS & lead-free

源丰电子（深圳）有限公司
YUENFUNG ELECTRONICS(SHENZHEN) CO.,LTD

				公差 TOLEANCES	.X± 0.4	.XX± 0.25	角度 ± 5°	UNIT 单位 mm	SCALE 1:1	
				版本 VERSION	A0	比例尺 SCALE	NONE	日期 DATE	2026.11.13	TITLE 图名 Sub-Miniature Toggle Switch
										DWG NO.料号 SM00087ZNR
				核准 APPROVED BY		核对 CHECKED BY		绘图 DRAWN BY	WSL	PART NO.型号 ST-0-102-A01-T000-LF
版本 VER.	变更说明 CHANGE DESCRIPTION	日期 DATE	ECN NO.							