

SECION:A-A

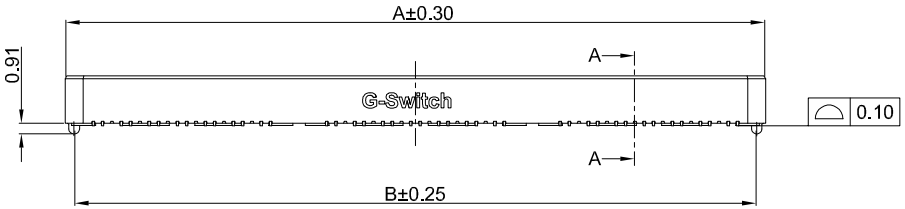

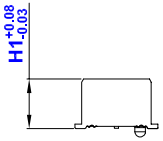

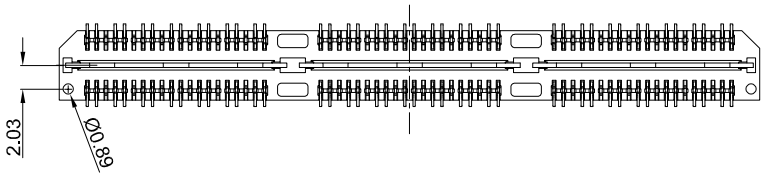

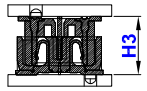

MATING HEIGHT

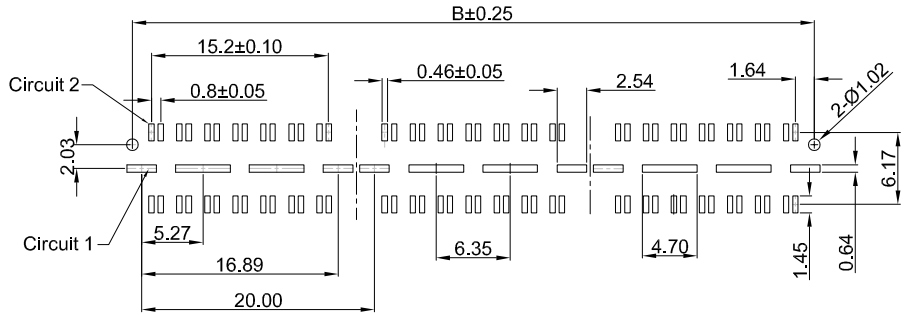

PCB REFERENCE DIAGRAM
TOLERANCE:±0.05



GT-B0806 M S V XX -XX X XX 02

- **G-Switch**
- **Series No**
- **M-Male**
- **Termipoint**
  S-SMT
- **Angle**
  V-180°
- **Helght**(H1)
  01-4.267mm
  02-7.264mm
  03-10.269mm
  04-13.269mm
  05-14.269mm
  06-15.246mm
  07-18.240mm
  08-21.237mm
  09-24.237mm
  10-29.238mm
- **Pin Q' PY**
  40~200
- **Housing Colour**
  B-Black
- **Terminal Plating**
  04-Au10μ"

G-Switch Specification:

1.Current rated: 2.0A AC/DC
2.Voltage rating: 225V AC/DC
3.Withstanding voltage: 675V AC
4.Contact resistance: 15mΩ Max.
5.Insulation resistance: 5000MΩ min
6.Durability cycle: 500 Cycles
7.Removal force: 0.01kgf/Pin min
8.Operating temperature range: -55°C ~ +125°C

MATING HEIGHT(H3)	PLUG (H1.mm)	SOCKET (H2.mm)
5.00	4.265	3.25
8.00	7.264	3.25
11.00	10.269	3.25
14.00	13.269	3.25
15.00	14.269	3.25
16.00	15.246	3.25
19.00	18.240	3.25
22.00	21.237	3.25
25.00	24.237	3.25
30.00	29.238	3.25

NO.	PART NAME	MATERIAL	REMARK
2	CONTACT	PHOSPHOR BRONZE	Au10μ" ON CONTACT AREA
1	HOUSING	LCP,94V-0	BLACK

Ordering Information:

Circuit	Dimensions(mm)		Circuit	Dimensions(mm)	
	A	B		A	B
28	20.00	18.48	112	80.00	78.49
56	40.00	38.48	140	100.00	98.49
84	60.00	58.48	---	---	---

Pb Process Capable | RoHS Compliant EU RoHS Standards | Halogen Compliant Halogen Free

SCALE: 1:1	UNIT: mm	Title: BTB 0.80mm Pitch 180° Dual Rows SMT Type Mate Connector	
SIZE: A4			
Unless otherwise General Tolerance:		Model Code: GT-B0806MSVXX-XXXXX02	
X ±0.40			
X.x ±0.30			
X.xx ±0.20			
X° ±5°			
X.x° ±3°			

DRAWN	CHECKED	APPROVED	DATE
Hu	Hu	Chen	2022.12.28

品赞科技 G-Switch www.dg-switch.com

REV: A0 SHEET: 1/1