版本/version	变更内容/ECN	工程确认/confirmation	日期/Date

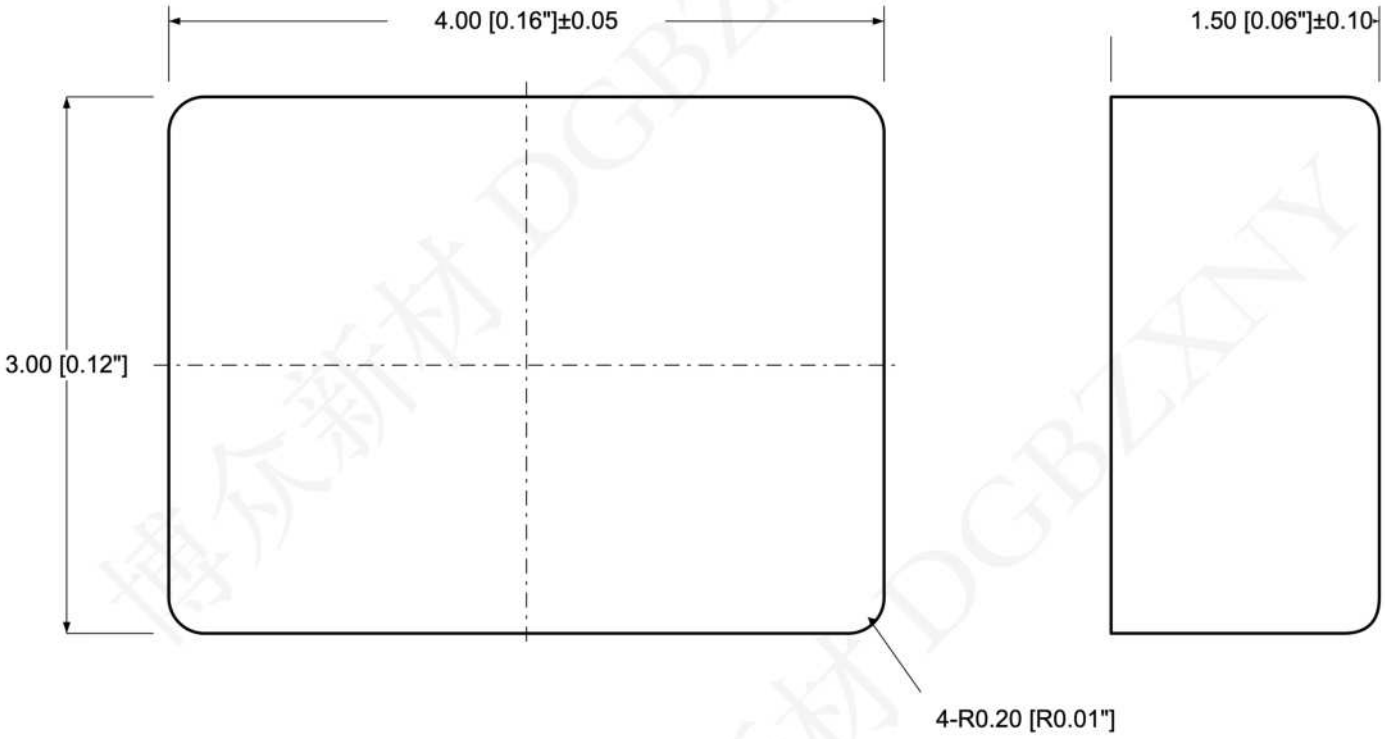

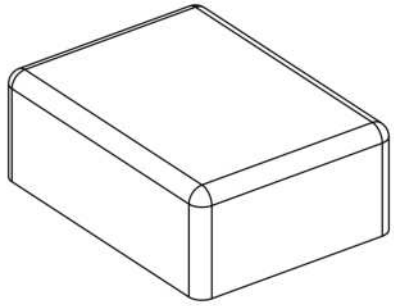

1.材质:黄铜, 厚度:1.5mm±0.10mm;
Material: Brass T=1.5mm±0.10mm

2.表面处理:镀金 1U; 盐雾;24H
Surface treatment: Gold plating 1U, Salt spray level 24H

3.符合RoHS、REACH环保要求;
RoHS、REACH Compliance

4.包装方式:袋装
Packing: Bag (BG01)

品牌(BRAND)	dgbzxny® 博众新材	页码(SHEET)	1/1	单位(UNIT):MM	日期(DATE)	2025-6-12		These drawings and specifications are Dongguan Bozhong New Energy CoLtd. The property should not be copied. Without Dongguan Bozhong New Energy Co., Ltd. Prior written consent to copy or use in any way.
工厂(FACTORY)	东莞市博众新能源材料技术有限公司 Dongguan Bozhong New Energy Material Technology Co., Ltd	版本(REV)	A1	比例(SCALE) 24:1	设计(DESIGN)	XIAO	未注公差 TOLERANCE UNSPECIFIED X.X ±0.15 X.XX ±0.10 ANG. ±2°	
品名(ITEM NO)	4*3*1.5 Brass, Gold plating SMD Busbar	料号(PART NO)	BTC-4315-BG01		审核(CHECKED)	HAIJIANG		