JW3903

2.5A Boost Charger
For 2 or 3 Cells In Series Battery Pack

Preliminary Specifications Subject to Change without Notice

DESCRIPTION

The JW®3903 is a highly integrated synchronous switch-mode boost charger for 2- or 3-cell series Li-ion and Li-polymer battery. The JW3903 provides complete battery charging management includes pre-charge, constant-current fast charge, constant-voltage charge, charge termination and auto recharge. The device is able to charge the battery from a 5V adapter or USB input.

The JW3903 supports up to 2.5A charge current, and the user can configure the current through external resistor for different applications. The charge voltage can also be configured to 8.4V, 8.7V, 12.6V or 13.05V via external resistor. The boost converter switching frequency is 1MHz and engages PFM in light load to maintain high efficiency.

The JW3903 features input voltage based dynamic power management (V_{IN} DPM) to limit the input power and avoid adapter or USB port overloading. An internal thermal feedback loop regulates the charge current to limit the die temperature during high power operation or high ambient temperature.

The JW3903 guarantees robustness with input under-voltage and over-voltage protection, battery over voltage protection, thermal shutdown, battery temperature monitoring, and a programmable timer to prevent prolonged charging of a dead battery.

The JW3903 is available in QFN4X4-24 package.

Company's Logo is Protected, "JW" and "JOULWATT" are Registered Trademarks of JoulWatt technology Inc.

FEATURES

- Fully Integration of Synchronous Boost Charger
  - All Power MOSFETs
  - Current Sensing
  - Loop Compensation
- 3.6V to 5.5V Input Operation Voltage Range
- Up to 20V Input Sustainable Voltage
- Supports 2- or 3-Cell Battery Charging
- Input Voltage Based Dynamic Power Management
- Input Over Voltage Protection
- Flexible Parameter Setting via External Resistors
  - Charge Current
  - Charge Voltage
  - Charge Timer
  - V_{IN_DPM} Threshold
- Charge Status Indication
- Comprehensive Safety Protection
  - Battery Over-Voltage Protection
  - Battery Temperature Monitoring
  - Charge Safety Timer
  - Thermal Regulation and Thermal Shutdown
- Ultra-Low Quiescent Current: <1uA
- Package: QFN4X4-24

APPLICATIONS

- Blue Tooth Applications
- Electronic and Robotic Toys
- POS Machine

JoulWatt® Proprietary Information. Patent Protected.
Unauthorized Photocopy and Duplication Prohibited.
This document contains information of a product under development.
JoulWatt reserves the right to change this product without notice.

TYPICAL APPLICATION

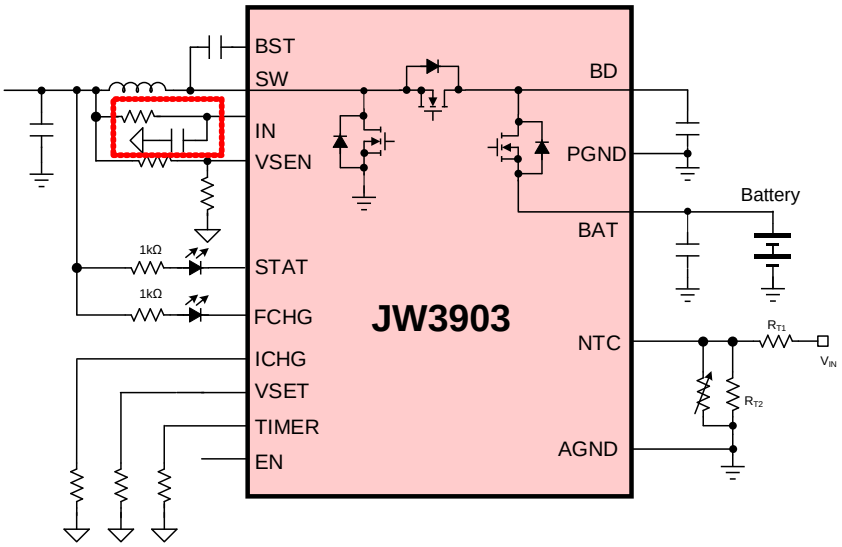

JoulWatt® Proprietary Information. Patent Protected.
Unauthorized Photocopy and Duplication Prohibited.
This document contains information of a product under development.
JoulWatt reserves the right to change this product without notice.

ORDER INFORMATION

DEVICE[1)]	PACKAGE	TOP MARKING[2)]	ENVIRONMENTAL[3)]
JW3903QFND#TR	QFN4X4-24	JW3903 YW□□□□□	Green

Notes:

1) JW□□□ □□□ # TR
- TR: Tape and Reel (If TR is not shown, it means Tube)
- □□□: Package Code
- JW□□□: Part No.

2) Line1: JW □□□□
- □□□□: Product code
- JW: Joulwatt LOGO

Line2: YW□□□□□
- □□□□□: Lot number
- □□□□□: Week code
- YW: Year code

3) All Joulwatt products are packaged with Pb-free and Halogen-free materials and compliant to RoHS standards.

PIN CONFIGURATION

TOP VIEW

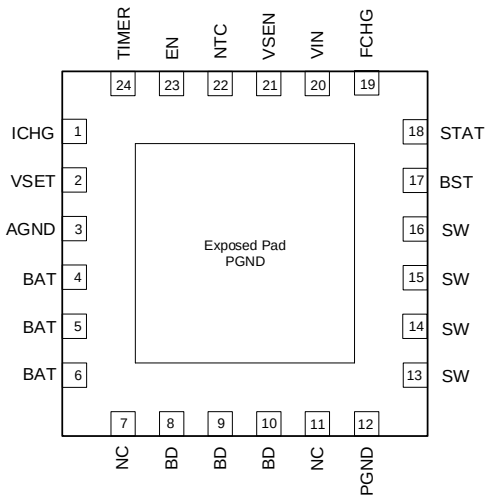

QFN4X4-24

This document contains information of a product under development.
JoulWatt reserves the right to change this product without notice.

ABSOLUTE MAXIMUM RATING[1)]

VIN, SW, BD, BAT, EN, NTC, STAT, FCHG ..... -0.3V to 20V
BST-SW ..... -0.3V to 7V
TIMER, ICHG, VSET, VSEN ..... -0.3V to 7V
Junction Temperature[2)] ..... -40ºC to 150ºC
Lead Temperature 260ºC
Storage Temperature ..... -65ºC to +150ºC
ESD Rating (Human-Body Model, HBM) ..... ±2kV

RECOMMENDED OPERATING CONDITIONS[3)]

Input Voltage V_{IN} ..... 3.6V to 5.5V
Battery Voltage V_{BAT} ..... 0V to 13.5V
Charge Current ..... 0A to 3.15A
Operation Junction Temperature (T_J) ..... -40ºC to +125ºC
Continuous Power Dissipation (T_A=25 ºC)[4)] 2W

THERMAL PERFORMANCE[5)]

	θ_{JA}	θ_{JC}	
QFN4x4-24	48	3.5	ºC/W

Note:

1) Exceeding these ratings may damage the device. These stress ratings do not imply function operation of the device at any other conditions beyond those indicated under RECOMMEND OPERATION CONDITIONS.

2) The JW3903 includes thermal protection that is intended to protect the device in overload conditions. Continuous operation over the specified absolute maximum operating junction temperature may damage the device.

3) The device is not guaranteed to function outside of its operating conditions.

4) The maximum allowable continuous power dissipation at any ambient temperature is calculated by $P_{D(MAX)} = (T_{J(MAX)}-T_A)/\theta_{JA}$.

5) Measured on JESD51-7, 4-layer PCB

JoulWatt® Proprietary Information. Patent Protected.
Unauthorized Photocopy and Duplication Prohibited.
This document contains information of a product under development.
JoulWatt reserves the right to change this product without notice.

ELECTRICAL CHARACTERISTICS

V_{IN} =5V, V_{BAT}=7.4V, T_A=25 ℃, unless otherwise stated

Item	Symbol	Condition	Min.	Typ.	Max.	Units
Power Supply						
Input voltage	V_{IN}		3.6		5.5	V
Input under-voltage lock-out threshold	V_{IN_UVLO}	V_{IN} rising	3.5	3.65	3.8	V
		V_{IN} falling	3.4	3.55	3.7	V
Input present detect deglitch time	t_{UVLO_R}	V_{IN} rising, V_{IN} > V_{IN_UVLO}		256		ms
Input absent detect deglitch time	t_{UVLO_F}	V_{IN} falling, V_{IN} < V_{IN_UVLO}		30		ms
Battery quiescent current	I_{Q_BAT}	V_{IN}=0V, EN=LOW, V_{BAT}=8V, shutdown mode		0.6	1	μA
		V_{IN}=0V, EN=HIGH, V_{BAT}=8V, idle mode		50	100	μA
		V_{IN}=5V, EN=HIGH, V_{BAT}=8.5V, charge terminated		50	100	μA
Input quiescent current	I_{Q_IN}	V_{IN}=5V, EN=LOW, V_{BAT}=8V, idle mode		0.8	1	mA
		V_{IN}=5V, EN=HIGH, V_{BAT}=8V, converter not switching		3	5	mA
Battery Charger						
Input voltage limit reference voltage	V_{VSEN_REF}		1.045	1.1	1.155	V
ICHG pin voltage for setting charge current	V_{ICHG}	R_{ICHG} = 10kΩ to 50kΩ	0.98	1	1.02	V
Charge current in CC charge phase	I_{CC}	R_{ICHG} = 10kΩ	0.9	1	1.1	A
		R_{ICHG} = 50kΩ	150	200	250	mA
VSET pin pull up current	I_{VSET}		45	50	55	μA
Battery voltage regulation target	V_{BAT_FULL}	VSET pin floating	8.358	8.4	8.442	V
		R_{VSET} = 0Ω	8.657	8.7	8.743	V
		R_{VSET} = 25kΩ	12.537	12.6	12.663	V
		R_{VSET} = 15kΩ	12.985	13.05	13.115	V
Battery recharge threshold[6]	V_{RECHG}	V_{BAT} falling, comparing V_{BAT_FULL}		-200		mV
Battery recharge threshold hysteresis[6]		V_{BAT} rising, comparing V_{BAT_FULL}		-100		mV

JoulWatt® Proprietary Information. Patent Protected.
Unauthorized Photocopy and Duplication Prohibited.
This document contains information of a product under development.
JoulWatt reserves the right to change this product without notice.

ELECTRICAL CHARACTERISTICS

V_{IN} =5V, V_{BAT}=7.4V, T_A=25 ºC, unless otherwise stated						
Item	**Symbol**	**Condition**	**Min.**	**Typ.**	**Max.**	**Units**
Battery full charge deglitch time	t_{FULL}		450	500	550	ms
Charge termination current	I_{TERM}		50	100	150	mA
Pre-charge current	I_{PRE}		50	100	150	mA
Top MOSFET on-resistance	$R_{DSTG(ON)}$			20		mΩ
Bottom MOSFET on-resistance	$R_{DSBG(ON)}$			40		mΩ
Battery MOSFET on-resistance	$R_{DSB(ON)}$			30		mΩ
Switch frequency	f_{SW}	In CCM	850	1000	1150	kHz
Pre-charge threshold	V_{BAT_PRE}	V_{IN}=5V, V_{CV}<9V, 2 cells, V_{BAT} rising	5.4	5.6	5.8	V
		V_{IN}=5V, V_{CV}<9V, 2 cells, V_{BAT} falling		5.4		V
		V_{BAT}=5V, V_{CV}>9V, 3 cells, V_{BAT} rising	8.1	8.4	8.7	V
		V_{IN}=5V, V_{CV}>9V, 3 cells, V_{BAT} falling		8.0		V
Thermal regulate threshold[6)]	T_{J_REG}			145		°C
Logic I/O Pin						
EN rising threshold	V_{EN_R}	EN ramps up	2.28	2.4	2.52	V
EN falling threshold	V_{EN_F}	EN ramps down	1.9	2	2.1	V
Output low threshold level of STAT	V_{OL_STAT}	Sink current = 5mA			0.8	V
Output low threshold level of FCHG	V_{OL_FCHG}	Sink current = 5mA			0.8	V
Protection						
VIN over voltage protection threshold	V_{IN_OVP}	V_{IN} rising	5.75	6.05	6.35	V
		V_{IN} falling	5.5	5.75	6	V
VIN over voltage fault setting deglitch time[6)]	t_{OV_FAULT}	VIN rising		1		ms
VIN over voltage protection release deglitch time	t_{OV_REL}	VIN falling	27	30	33	ms
NTC under temperature threshold	V_{NTC_COLD}	V_{NTC} rising	72.2%	73.2%	74.2%	
		V_{NTC} falling	67.8%	68.8%	69.8%	
NTC over temperature threshold	V_{NTC_HOT}	V_{NTC} falling	31.9%	32.9%	33.9%	
		V_{NTC} rising	35.8%	36.8%	37.8%	

JoulWatt® Proprietary Information. Patent Protected.
Unauthorized Photocopy and Duplication Prohibited.
This document contains information of a product under development.
JoulWatt reserves the right to change this product without notice.

ELECTRICAL CHARACTERISTICS

V_{IN} =5V, V_{BAT}=7.4V, T_A=25 ºC, unless otherwise stated						
Item	**Symbol**	**Condition**	**Min.**	**Typ.**	**Max.**	**Units**
NTC protection deglitch time	t_{NTC}		27	30	33	ms
NTC protection release deglitch time	t_{NTC_RE}		27	30	33	ms
Charge safety timer	t_{CHG}	R_{TIMER} = 100kΩ	4	4.5	5	hour
Timer count clock rate during trickle charge phase[6)]	f_{CLK_TC}	V_{BAT} < V_{TRI}		5X		f_{CHG}
Thermal shutdown threshold[6)]	T_{SHUT}			165		°C
Thermal shutdown recovery hysteresis[6)]	T_{SD_HYS}			20		°C
Battery over voltage threshold	V_{BAT_OVP}	V_{BAT} rising	102	104	106	%V_{CV}
		V_{BAT} falling	100	102	104	%V_{CV}
Battery over voltage protection deglitch time	t_{BAT_OVP}	V_{BAT} rising	27	30	33	ms

Notes:

6) Guaranteed by design.

JoulWatt® Proprietary Information. Patent Protected.
Unauthorized Photocopy and Duplication Prohibited.
This document contains information of a product under development.
JoulWatt reserves the right to change this product without notice.

PIN DESCRIPTION

Pin No.	Name	Description
1	ICHG	Charge current setting. A resistor from ICHG to AGND is used to program the charge current. The acceptable programming range on ICHG pin is 200mA (50kΩ) to 2.5A (4kΩ).
2	VSET	Battery charge voltage setting. VSET pin sets battery charge voltage. Program battery regulation voltage with a resistor pull-down from VSET to AGND as follows: R_{VSET} < 5kΩ (short to AGND) = 8.7V R_{VSET} = 15kΩ (±10%) = 13.05V R_{VSET} = 25kΩ (±10%) = 12.6V R_{VSET} > 35kΩ (floating) = 8.4V
3	AGND	Analog signal ground
4, 5, 6	BAT	Battery power connection. Connect minimum recommended 10μF capacitance after derating closely to the BAT pin and PGND.
7, 11	NC	Not connection. **Please leave these pins in application.**
8, 9, 10	BD	Boost converter output. Place a 2x22μF ceramic capacitor on this pin for stability. Bypass BD to PGND with a 0.1μF ceramic capacitor, placed as close to the chip as possible.
12	PGND	Power ground
13, 14, 15, 16	SW	Inductor connection. Connect to the switched side of the external inductor
17	BST	PWM high-side driver supply. Internally, BST is connected to the cathode of the boot-strap diode. Connect a 0.1μF bootstrap capacitor from SW to BST
18	STAT	Open drain charge status indicator. LOW indicates charge in progress. HIGH indicates charge complete or charge disabled or fault occurs.
19	FCHG	Open drain charge termination indicator. LOW indicates charge complete. FCHG is HIGH in others.
20	VIN	Input supply. VIN is connected to the external DC supply. Place a 10μF ceramic capacitor as close to the IC as possible.
21	VSEN	Voltage sense of input voltage for DPM control loop. If the voltage on VSEN drops to internal 1.1V reference voltage, the charge current will be reduced and clamped VSEN voltage at 1.1V.
22	NTC	Temperature qualification voltage. Connect a negative temperature coefficient thermistor. Program temperature window with a resistor divider from VIN to NTC to GND. Charge suspends when TS pin is out of range.
23	EN	Active high chip enable pin. Pull EN high to enable the device.
24	TIMER	Charge safety timer. Connect a timing resistor between this pin and AGND to set the charge safety timer.
Exposed Pad		Exposed pad, power ground.

JoulWatt® Proprietary Information. Patent Protected.
Unauthorized Photocopy and Duplication Prohibited.
This document contains information of a product under development.
JoulWatt reserves the right to change this product without notice.

BLCOK DIAGRAM

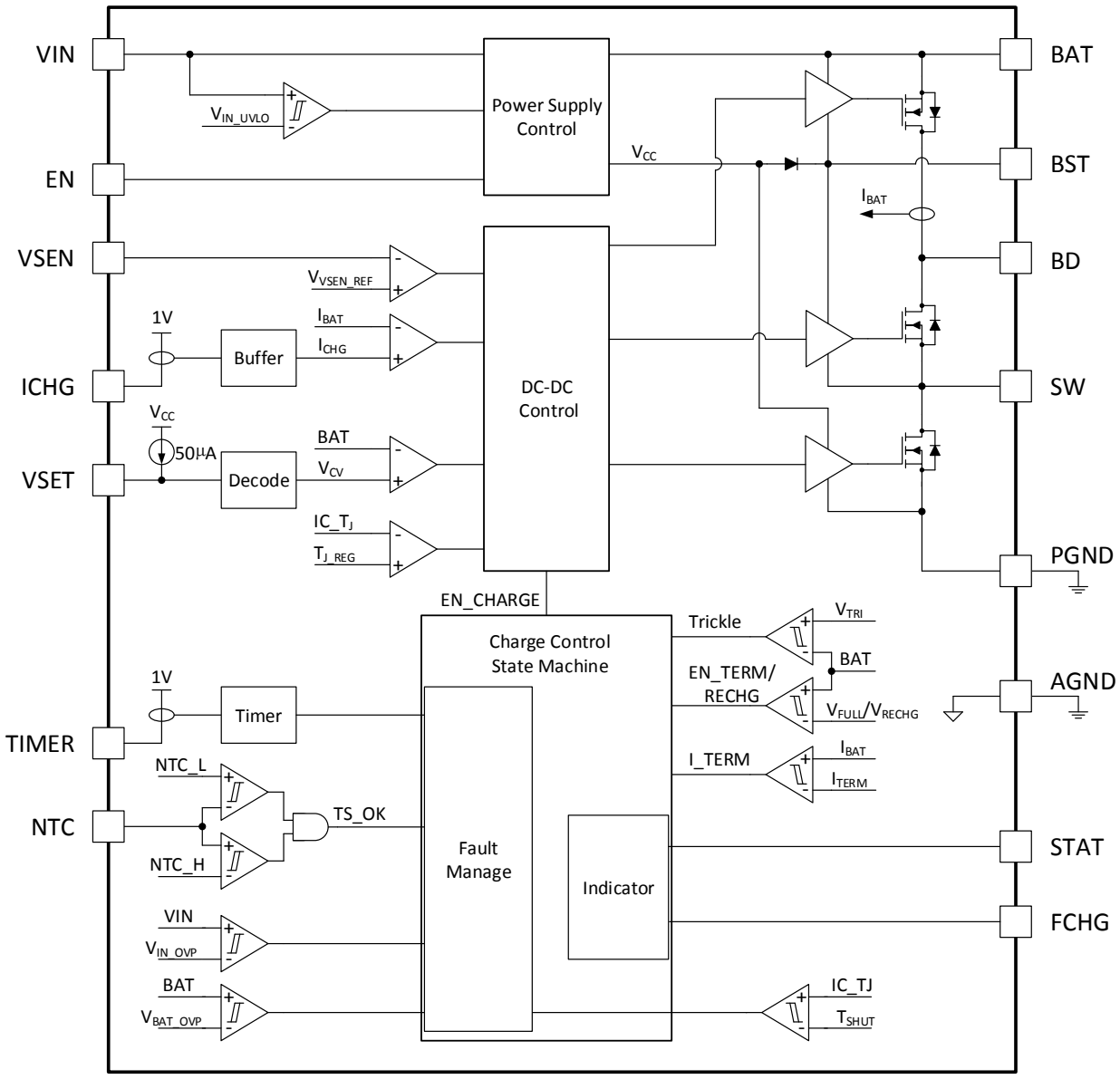

JoulWatt® Proprietary Information. Patent Protected.
Unauthorized Photocopy and Duplication Prohibited.
This document contains information of a product under development.
JoulWatt reserves the right to change this product without notice.

TYPICAL PERFORMANCE CHARACTERISTICS

V_{IN}=5V, V_{BAT}=7.4V, L=3.3μH, T_A = +25°C, unless otherwise noted.		

JoulWatt® Proprietary Information. Patent Protected.
Unauthorized Photocopy and Duplication Prohibited.
This document contains information of a product under development.
JoulWatt reserves the right to change this product without notice.

FUNCTIONAL DESCRIPTION

The JW3903 is a highly integrated synchronous switch mode boost charger for 2- or 3-cell Li-ion and Li-polymer battery. It can charge the battery from an input range 3.6V to 5.5V with 20V absolute maximum input voltage rating. The high-side switching FET, low-side switching FET and BATFET are integrated. The device also integrates the boot-strap diode for high-side gate driver.

JW3903 is a standalone charger and features automatic charging profile including pre- charge, constant current fast charge, constant voltage charge function without host. The charge current, charge voltage and safety charge timer can be programed via external resistors flexibly.

Device Power Supply

Shutdown mode

When VIN voltage is below UVLO and EN pin is LOW, JW3903 stays in shutdown mode with lowest quiescent current less than 1μA. In this mode, internal bias circuits are disabled.

The device stays in shutdown mode if all of the following conditions are valid:

- $V_{IN} < V_{IN\_UVLO}$
- EN LOW

IDLE mode

When the adapter is present and EN keeps LOW, or adapter is not present but EN is HIGH, JW3903 enters idle mode, enables the internal bias circuits. In idle mode, the boost converter is disabled for power saving.

The device stays in idle mode if one of the following conditions is valid:

- $V_{IN} < V_{IN\_UVLO}$ and EN HIGH
- $V_{IN} > V_{IN\_UVLO}$ and EN LOW

Charge mode

JW3903 enters charge mode when VIN voltage is above UVLO and EN pin is HIGH, all the internal bias circuits are enabled.

The device stays in charge mode if all of the following conditions are valid:

- $V_{IN} > V_{IN\_UVLO}$
- EN HIGH

Adapter Detection

When an adapter is plugged in, the device checks the VIN voltage. When VIN voltage is above UVLO and last for a 256ms deglitch time, an internal VIN present status is set to high. The JW3903 qualifies the input as a valid source when the internal VIN present status has been set to high and the input voltage below the overvoltage threshold.

The device detects a valid input if all of the following conditions are valid:

- $V_{IN} > V_{IN\_UVLO}$ over 256ms
- $V_{IN} < V_{IN\_OVP}$

Enable and Disable Charging

In charge mode, the following conditions have to be valid to start charge:

- EN pin is HIGH
- $V_{IN} > V_{IN\_UVLO}$ over 256ms
- $V_{IN} < V_{IN\_OVP}$
- BAT does not exceed V_{BAT_OVP} threshold
- IC temperature does not exceed T_{SHUT} threshold
- Not thermistor fault on NTC
- No safety timer fault

One of the following conditions stops on-going charging:

JoulWatt® Proprietary Information. Patent Protected.
Unauthorized Photocopy and Duplication Prohibited.
This document contains information of a product under development.
JoulWatt reserves the right to change this product without notice.

- EN is pulled LOW
- $V_{IN} < V_{IN\_UVLO}$
- $V_{IN} > V_{IN\_OVP}$
- BAT exceeds V_{BAT_OVP} threshold
- T_{SHUT} IC temperature threshold is reached
- NTC thermistor out of normal range
- Charge safety timer expires

Battery Charging Management

The JW3903 provides three main charge phase: trickle charge, constant-current (CC) charge and constant-voltage (CV) charge.

Pre-Charge

When the battery voltage is lower than the V_{BAT_PRE}, the JW3903 is in pre-charge phase and apply a pre-charge current to the depleted battery. The pre-charge current is fixed at 100mA. In pre-charge phase, the boost output voltage BD is regulated at around 6V for 2-cell battery application and around 8.4V for 3-cell battery application. The BATFET is working as a LDO regulator in this phase.

Constant-Current Charge

When the battery voltage exceeds V_{BAT_PRE}, the JW3903 transits from pre-charge to constant-current charge (fast charge) with soft start. The fast charge current can be programmed via an external resistor between ICHG pin and AGND. The program resistor and the charge current are calculated using the following equations:

$$I_{CHG}(A) = \frac{10}{R_{ICHG}(k\Omega)}$$

Where the I_{CHG} is in A and R_{ICHG} is in kΩ, the acceptable programming range on ICHG pin is 200mA (50kΩ) to 2.5A (4kΩ).

Constant-Voltage Charge

When the BAT voltage rises to the preset battery voltage regulation target (V_{BAT_FULL}), the charge current begins to taper off. The charge voltage can be configured via an external resistor between VSET pin and AGND. The VSET pin sources a fixed current at 50μA and checks the voltage on this pin (V_{VSET}) before the charge cycle starts. When V_{VSET} is lower than 0.5V, the V_{BAT_FULL} will be 8.7V; when V_{VSET} is between 0.5V and 1V, the V_{BAT_FULL} will be 13.05V; when V_{VSET} is between 1V and 1.5V, the V_{BAT_FULL} will be 12.6V; when V_{VSET} is higher than 1.5V, the V_{BAT_FULL} will be 8.4V.

Table 1. charge voltage programming

V_{VSET} (V)	Typical R_{VSET} (kΩ)	V_{BAT_FULL} (V)
<0.5V	< 5kΩ (short to AGND)	8.7
0.5V<V_{VSET}<1V	15kΩ (±10%)	13.05
1V<V_{VSET}<1.5V	25kΩ (±10%)	12.6
>1.5V	> 35kΩ (floating)	8.4

Charge Termination

The charge cycle is considered as completed when BAT voltage exceeds battery full charge enable threshold and the charge current reaches the charge termination threshold (I_{TERM}). The charge termination deglitch time is 500ms.

If the charger device is in DPM regulation or thermal regulation during charging, the actual charging current will be less than the programmed value. In this case, termination is temporarily disabled, the charging safety timer is counted at the same clock rate under this situation.

Automatic Recharge

When a full battery voltage is discharged below recharge threshold (V_{RCHG}), JW3903 automatically starts a new charging cycle. After the charge is done, toggle EN pin can also initial a new charging cycle.

JoulWatt® Proprietary Information. Patent Protected.
Unauthorized Photocopy and Duplication Prohibited.
This document contains information of a product under development.
JoulWatt reserves the right to change this product without notice.

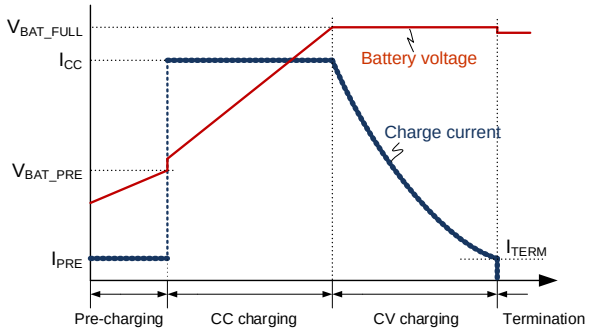

Figure 1. Battery Charge Profile

Charging Status Indicators

The JW3903 has two open-drain charge status indication output pins. STAT is battery in charging indicator, it is pulled LOW when battery in charging and output high impedance when charge finished or charge disabled. FCHG is pulled LOW only when the charging is complete, otherwise, FCHG is high impedance.

Table 2. Charge Status Indicators

Charge Status	STAT	FCHG
In charging	Low	High Z
Charge finished	High Z	Low
• $V_{IN} < V_{IN\_UVLO}$ • $V_{IN} > V_{IN\_OVP}$ • $V_{BAT} > V_{BAT\_OVP}$ • Thermal shutdown • NTC voltage out of range • Charge timeout • EN pin pulled LOW	High Z	High Z

Input Dynamic Power Management

To meet maximum current in USB spec and avoid over loading the adapter, JW3903 features input dynamic power management which continuously monitors the input voltage when charging. When input source is over-loaded, the voltage on VSEN pin falls to the input voltage limit reference (V_{VSEN_REF}). The device then reduces the charge current and clamps the input voltage at the input voltage limit. The input voltage limit threshold can be programmed through a resistor divider from VIN to VSEN to AGND.

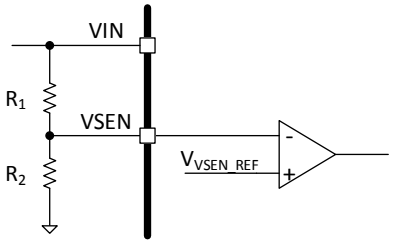

Figure 2. Input DPM threshold Programming

The input voltage limit threshold can be calculated as:

$$V_{IN\_DPM} = 1.1 \times \frac{R_1 + R_2}{R_2}$$

Thermal Regulation

An internal thermal feedback loop reduces the charge current if the die temperature attempts to rise above a default value of approximately 145°C, hence prevents the temperature from further increase and ensure device safe operation.

Protection and Fault Indication

Input Over-Voltage Protection

When the voltage of VIN pin rises above V_{IN_OVP} rising threshold, the chip stops switching; if V_{IN} above V_{IN_OVP} over t_{OVP_FAULT}, both the STAT and FCHG are forced high impedance; when the voltage of VIN pin falls below V_{IN_OVP} falling threshold, the device starts switching again automatically.

Battery Over-Voltage Protection

If the battery voltage rises above V_{BAT_OVP} rising threshold, the chip stops switching; both the STAT and FCHG are in high impedance during battery overvoltage event; when the battery voltage falls below V_{BAT_OVP} falling threshold, the

JoulWatt® Proprietary Information. Patent Protected.
Unauthorized Photocopy and Duplication Prohibited.
This document contains information of a product under development.
JoulWatt reserves the right to change this product without notice.

device starts switching again automatically.

Thermistor Qualification

The JW3903 provides a single thermistor input for battery temperature monitor. A resistor divider from VIN to NTC to GND is needed for thermistor qualification. The pull-up resistance is 10kΩ and the NTC thermistor should be 103AT.

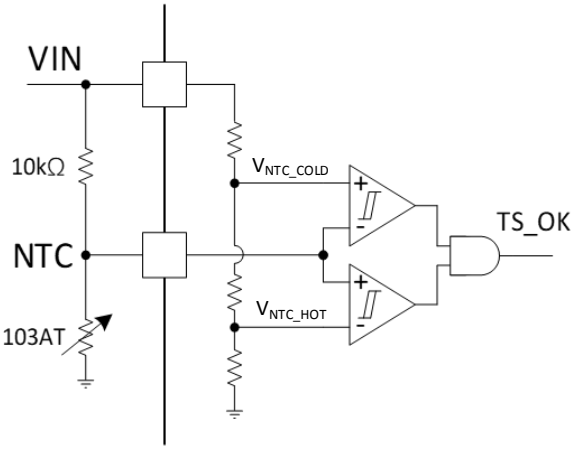

Figure 3. NTC Resistor Network

When the NTC resistor voltage is outside of the setting temperature thresholds, the chip stops switching and forces STAT and FCHG in high impedance. If the chip is in charge mode, it can resume switching when the NTC voltage is within the thresholds again.

Charge Safety Timer

The device has built-in safety timer to prevent extended charging cycle due to abnormal battery conditions. The user can program fast charge safety timer through an external resistor between TIMER pin and AGND. The safety charge timer expiration length is calculated as:

$$t_{CHG}(\text{hour}) = 4.5 \times \frac{R_{TIMER}(k\Omega)}{100}$$

Where t_{CHG} is in hour and R_{TIMER} is in kΩ, when safety timer expires, the charging cycle is terminated. During faults which disable charging, timer is keep running.

The safety timer is reset for the follows events:

- Charging cycle stop by pulling EN pin LOW
- VIN UVLO
- Battery full charged
- Battery voltage changes from trickle charge to fast charge or vice versa.

During trickle charge phase, the safety timer counts at 5 times clock rate. For example, if the charger is in trickle charge phase throughout the whole charging cycle, the safety timer is set to 24 hours, then the timer will expire in 4.8 hours.

Thermal Shutdown

The JW3903 provides thermal regulation during charging cycle to limit junction temperature. As an added level of protection, the charger converter turns off for self-protection whenever the junction temperature exceeds 165°C. The charger stays off until the junction temperature falls below 145°C. Once the temperature falls below 145°C, charge can be resumed.

JoulWatt® Proprietary Information. Patent Protected.
Unauthorized Photocopy and Duplication Prohibited.
This document contains information of a product under development.
JoulWatt reserves the right to change this product without notice.

PACKAGE OUTLINE

QFN4X4-24 UNIT: mm

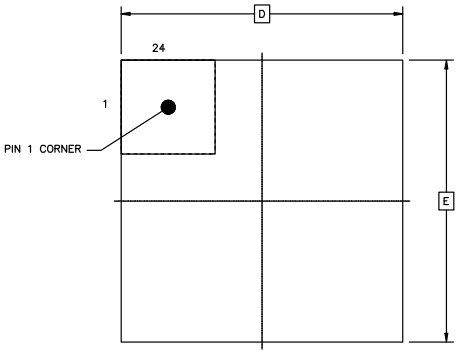

TOP VIEW

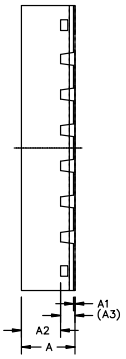

SIDE VIEW

SYMBOL	MILLIMETER		
	MIN	NOM	MAX
A	0.70	0.75	0.80
A1	0.00	0.02	0.05
A2	—	0.55	—
A3		0.203 REF	
b	0.20	0.25	0.30
D	3.90	4.00	4.10
E	3.90	4.00	4.10
e		0.50 BSC	
D2	2.60	2.70	2.80
E2	2.60	2.70	2.80
L	0.30	0.40	0.50
K		0.25 REF	

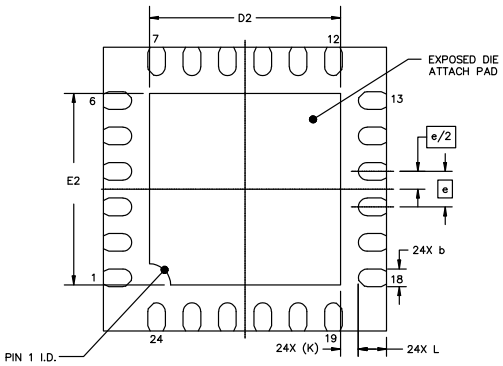

BOTTOM VIEW

QUADRANT ASSIGNMENTS FOR PIN 1 ORIENTATION IN TAPAE

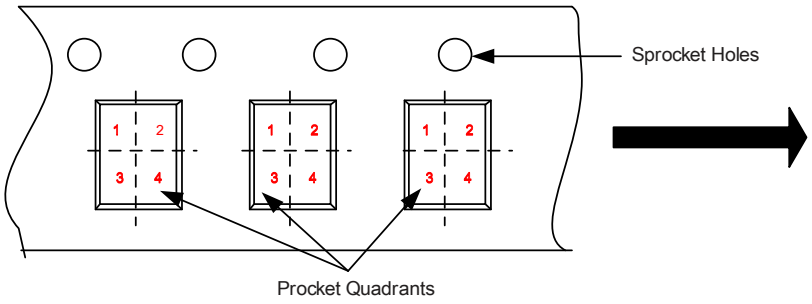

Package Type	Pin1 Quadrant
QFN4X4-24	1

JoulWatt® Proprietary Information. Patent Protected.
Unauthorized Photocopy and Duplication Prohibited.
This document contains information of a product under development.
JoulWatt reserves the right to change this product without notice.

IMPORTANT NOTICE

- **Joulwatt Technology Inc. reserves the right to make modifications, enhancements, improvements, corrections or other changes without further notice to this document and any product described herein.**
- **Any unauthorized redistribution or copy of this document for any purpose is strictly forbidden.**
- **Joulwatt Technology Inc. does not warrant or accept any liability whatsoever in respect of any products purchased through unauthorized sales channel.**

Copyright © 2020 JW3903 Incorporated.

All rights are reserved by Joulwatt Technology Inc.