

Product Features

- Excellent Insertion Loss and Isolation performance
- GPIO Control Interface
- VDD support 1.6V~4.2V
- Broadband frequency range: 0.1 to 7.125 GHz
- Low insertion loss: 0.80 dB @ 7.125 GHz
- Small package: DFN- 6-1.1 x 0.7 x 0.5mm
- No DC blocking capacitors required
- 1kV HBM ESD Protection on all pins

Product Applications

- 5G multimode cellular tablets and Multi-Mode LTE
- Diversity antenna switching

Product Description

The FM8625H is a Silicon On Insulator (SOI) Single Pole, Double Throw (SPDT) antenna switch which require very low insertion loss, high isolation and high linearity performance.

The high linearity performance and low insertion loss for 5G NR, and LTE applications.

The FM8625H is manufactured in a 1.1 x 0.7 x 0.5mm, 6-pin surface mount Duad Flat No-Lead (DFN) package.

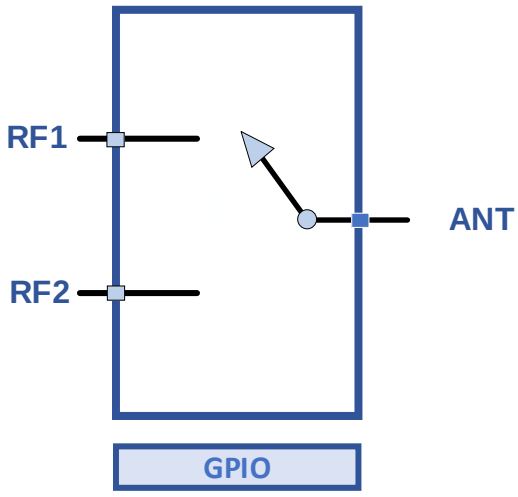

Figure 1 Functional Block Diagram

www.superchip.cn

 Copyright©2025, Shen Zhen FM Co.ltd

Absolute Maximum Conditions

Parameters	Symbol	Minimum	Maximum	Units
Supply voltage	V_{DD}	1.6	+4.8	V
Control voltage	V_{CTL}	0	+3.0	V
RF input power	Pin		+40	dBm
Storage temperature	T_{STG}	-55	+150	℃
Operating temperature	T_{OP}	-40	+90	℃
Human Body Model, Class 1C	ESD	1000		V

1: Test condition 25% duty cycle, VSWR=1:1, +25 ° C

Note: *Exposure to maximum rating conditions for extended periods may reduce device reliability. There is no damage to device with only one parameter set at the limit and all other parameters set at or below their nominal value. Exceeding any of the limits listed here may result in permanent damage to the device.*

General Electrical Specifications

Parameters	Symbol	Test Condition	Min.	Typ.	Max.	Units
Supply voltage	V_{DD}		1.6	2.8/1.8	4.2	V
Supply current, active mode	I_{DD}			50	100	μA
Control signal: High Low			1.6	1.8	 3.0 0.3	V
Control current: High Low	I_{CTL}				 5	μA
Turn-on time (PIN = 0 dBm)	T_{ON}	Measured from 50% of final VDD supply voltage to 90% of RF power			10	μs
Switching time (PIN = 0 dBm)	T_{SW}	Measured from 50% of final VC supply voltage to 90%/10% of RF power		2	3	μs

www.superchip.cn

 Copyright©2025, Shen Zhen FM Co.ltd

RF Specifications

VDD=2.8V, VCTLH=1.8V, VCTLL=0V, PIN=0dBm, ZO=50Ω, TA=25℃, Unless Otherwise Stated

Parameters	Symbol	Test Condition	Min.	Typ.	Max.	Units
Operating frequency	f		0.1		7.125	GHz
Insertion loss	IL	Up to 1.0 GHz		0.30	0.35	dB
		Up to 2.0 GHz		0.35	0.45	
		Up to 3.0 GHz		0.40	0.50	
		Up to 4.8 GHz		0.45	0.55	
		Up to 6.0 GHz		0.65	0.75	
		Up to 6.425 GHz		0.75	0.85	
		Up to 7.125 GHz		0.80	0.90	
Isolation (ANT port to any receive port)	I_{SO}	Up to 1.0 GHz	32	35		dB
		Up to 2.0 GHz	27	30		
		Up to 3.0 GHz	22	25		
		Up to 4.8 GHz	20	22		
		Up to 6.0 GHz	15	18		
		Up to 6.425 GHz	15	16		
		Up to 7.125 GHz	13	15		
2nd Order harmonics	2fo	Pin = +26 dBm,900MHz	-60	-64		dBm
		Pin = +35 dBm,900MHz	-40	-45		
3rd Order harmonics	3fo	Pin = +26 dBm,900MHz	-54	-56		dBm
		Pin = +35 dBm,900MHz	-32	-34		
0.1 dB Compression Point 25% duty cycle, VSWR=1:1	P0.1dB	900M, 50Ω		+40		dBm

www.superchip.cn

 Copyright©2025, Shen Zhen FM Co.ltd

RF Specifications

VDD=1.8V, VCTLH=1.8V, VCTLL=0V, PIN=0dBm, ZO=50Ω, TA=25℃, Unless Otherwise Stated

Parameters	Symbol	Test Condition	Min.	Typ.	Max.	Units
Operating frequency	f		0.1		7.125	GHz
Insertion loss	IL	Up to 1.0 GHz		0.35	0.40	dB
		Up to 2.0 GHz		0.40	0.50	
		Up to 3.0 GHz		0.45	0.55	
		Up to 4.8 GHz		0.50	0.60	
		Up to 6.0 GHz		0.70	0.80	
		Up to 6.425 GHz		0.80	0.90	
		Up to 7.125 GHz		0.85	0.95	
Isolation (ANT port to any receive port)	I_{SO}	Up to 1.0 GHz	32	35		dB
		Up to 2.0 GHz	27	30		
		Up to 3.0 GHz	22	25		
		Up to 4.8 GHz	20	22		
		Up to 6.0 GHz	15	18		
		Up to 6.425 GHz	15	16		
		Up to 7.125 GHz	13	15		
2nd Order harmonics	2fo	Pin = +26 dBm,900MHz	-55	-59		dBm
		Pin = +35 dBm,900MHz	-36	-41		
3rd Order harmonics	3fo	Pin = +26 dBm,900MHz	-50	-52		dBm
		Pin = +35 dBm,900MHz	-28	-30		
0.1 dB Compression Point 25% duty cycle, VSWR=1:1	P0.1dB	900M, 50Ω		+38		dBm

www.superchip.cn

 Copyright©2025, Shen Zhen FM Co.ltd

Truth Table

VCTL	ANT-RFX
0	ANT-RF1 on
1	ANT-RF2 on

www.superchip.cn

 Copyright©2025, Shen Zhen FM Co.ltd

Pin-out Information

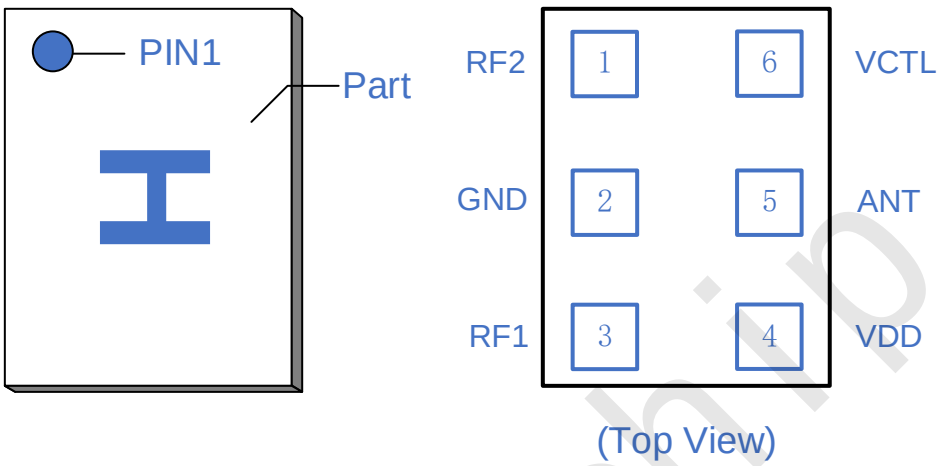

Figure 2 Pin-out Information

Table 1. Pin Description

Pin #	Name	Description	Pin #	Name	Description
1	RF2	RF Port 2	4	VDD	Voltage Supply
2	GND	Ground	5	ANT	Antenna Port
3	RF1	RF Port 1	6	VCTL	Logic Control Voltage

www.superchip.cn

 Copyright©2025, Shen Zhen FM Co.ltd

Application circuit

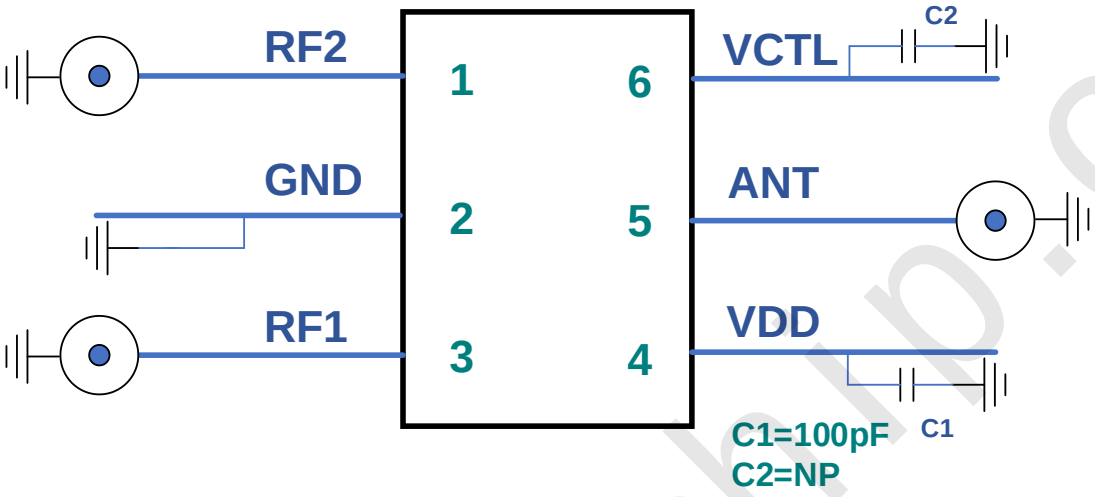

Figure 3 Application circuit

www.superchip.cn

 Copyright©2025, Shen Zhen FM Co.ltd

Evaluation Board

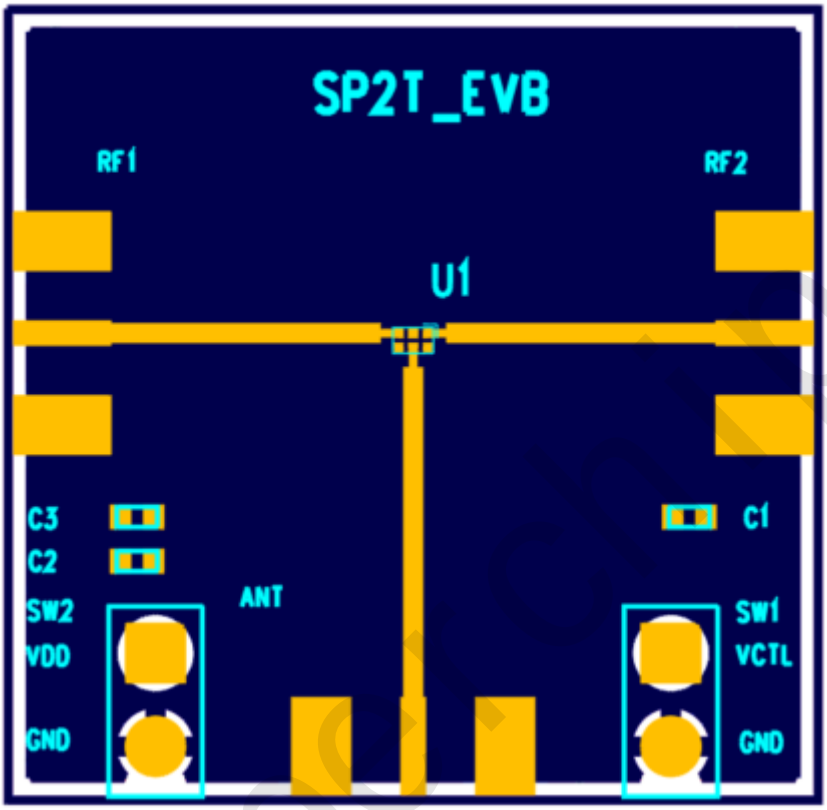

Figure 4 Evaluation Board Assembly Diagram

www.superchip.cn

 Copyright©2025, Shen Zhen FM Co.ltd

Package Outline Dimension

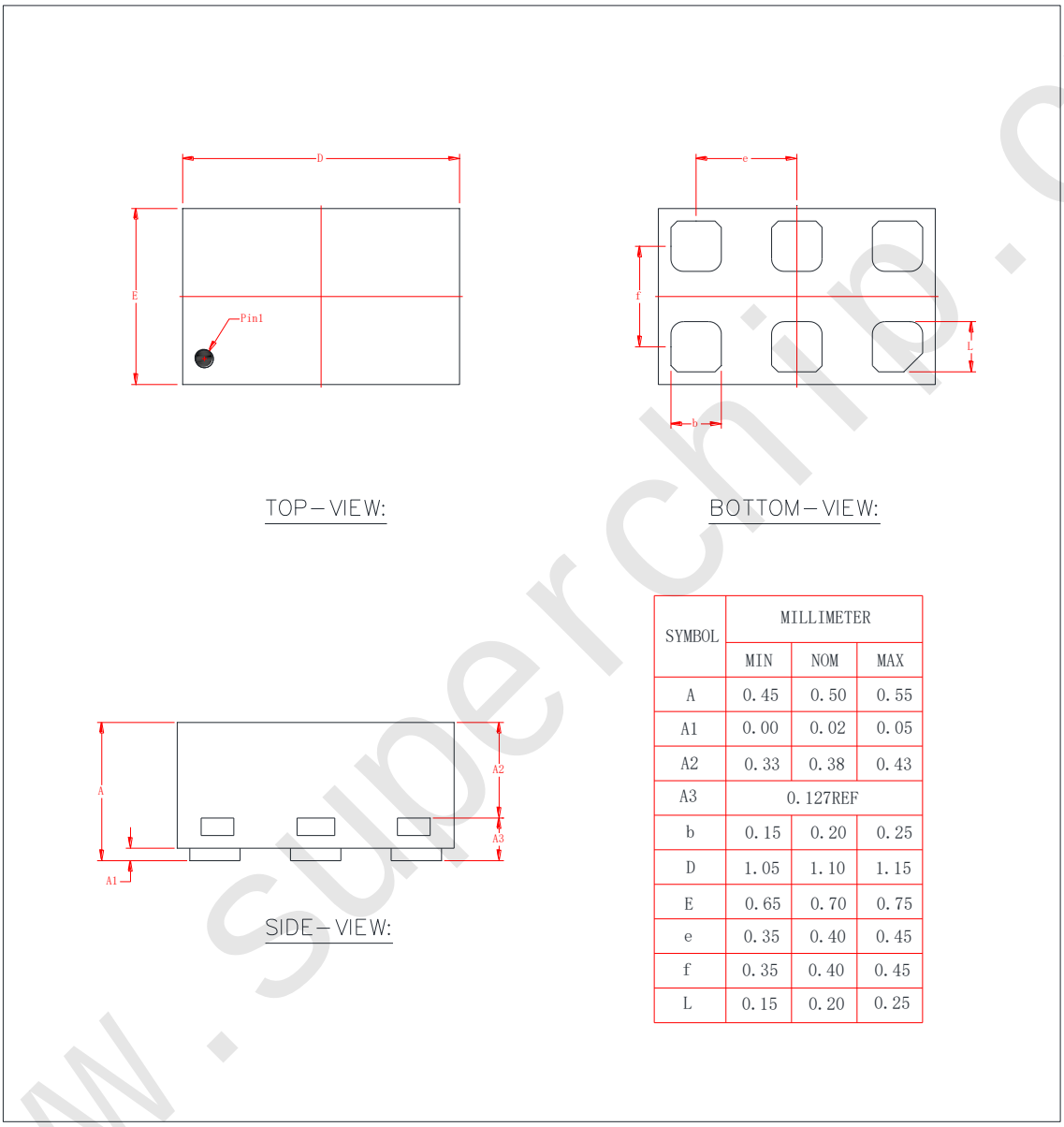

SYMBOL	MILLIMETER		
	MIN	NOM	MAX
A	0.45	0.50	0.55
A1	0.00	0.02	0.05
A2	0.33	0.38	0.43
A3	0.127REF		
b	0.15	0.20	0.25
D	1.05	1.10	1.15
E	0.65	0.70	0.75
e	0.35	0.40	0.45
f	0.35	0.40	0.45
L	0.15	0.20	0.25

Figure 5 Package Outline Dimension

www.superchip.cn

 Copyright©2025, Shen Zhen FM Co.ltd

Package Dimensions (5000pcs)

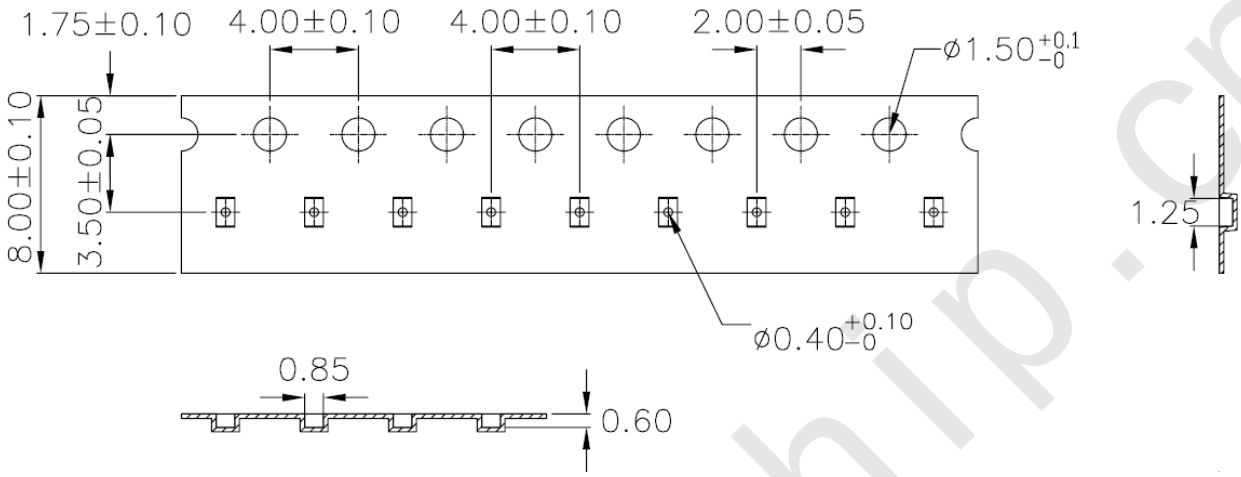

Figure 6 Tape and Reel Dimensions

Declaration of No Harmful Substances

This part is compliant with 2005/20/EC packaging directive, 1907/2006/EC REACH directive and the 2011/65/EU RoHS directive (Restrictions on the Use of Certain Hazardous Substances in Electrical and Electronic Equipment), as amended by Directive 2015/863/EU.

This product also has the following attributes:

• Lead free

• Halogen Free (Chlorine, Bromine)

• SVHC Free

www.superchip.cn

 Copyright©2025, Shen Zhen FM Co.ltd

Reflow Chart

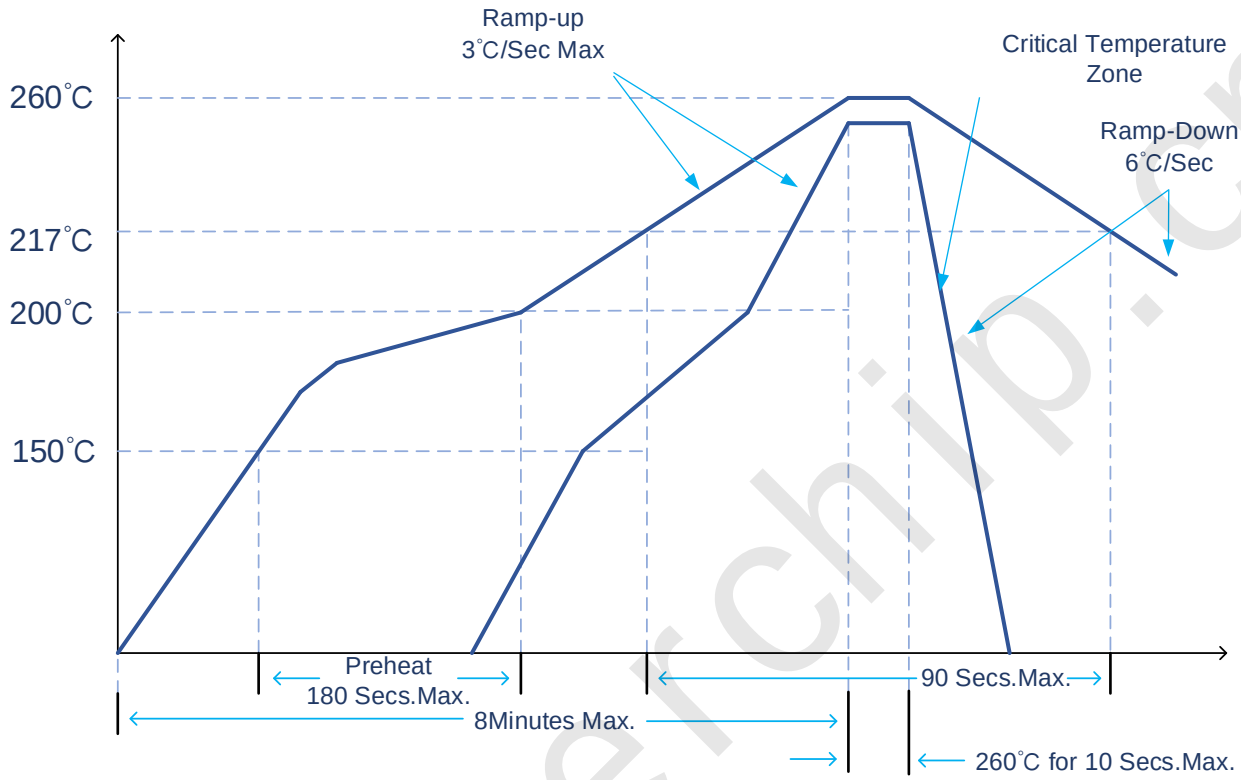

NOTE: Reflow Profile with 240˚C peak also acceptable.

www.superchip.cn

 Copyright©2025, Shen Zhen FM Co.ltd