50.0A Single-Phase Silicon Bridge Rectifier

1 General Description

1.1 Features

- Ideal for printed circuit board mounting
- This series is UL listed under the Recognized Component Index, file number E484648
- The plastic material used carries Underwriters Laboratory flammability recognition 94V-0
- Built-in printed circuit board stand-offs
- High case dielectric strength
- High temperature soldering guaranteed 260 ℃ /5 seconds at 5 lbs (2.3kg) tension

REVERSE VOLTAGE
50-1000V
FORWARD CURRENT
50Ampere

1.2 Typical Applications

- General-purpose bridge rectifiers, suitable for SMPS, PD fast chargers and other bridge rectification applications

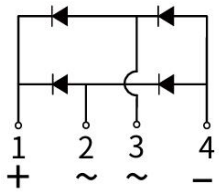

1.3 Mechanical Data

- Case: Reliable low cost construction utilizing molded plastic technique
- Terminals: Plated leads solderable per MIL-STD-202, Method 208
- Mounting Position: Any

2 Absolute Maximum Ratings(TA=25℃ Unless otherwise specified)

PARAMETER	SYMBOL	GBJ50005	GBJ5001	GBJ5002	GBJ5004	GBJ5006	GBJ5008	GBJ5010	UNIT
Maximum Recurrent Peak Reverse Voltage	V_{RRM}	50	100	200	400	600	800	1000	V
Maximum RMS Bridge Input Voltage	V_{RMS}	35	70	140	280	420	560	700	V
Maximum DC Blocking Voltage	V_{DC}	50	100	200	400	600	800	1000	V
Maximum Average Forward Rectified Current (with heatsink Note 2) @ T_C=100℃	$I_{F(AV)}$	50.0							A
Peak Forward Surge Current Single Sine-Wave Superimposed On Rated Load (JEDEC Method)	I_{FSM}	500							A
Operating Junction Temperature Range	T_J	-55 to +150							℃
Storage Temperature Range	T_{STG}	-55 to +150							℃

Notes: 1. Thermal resistance from Junction to Ambient on P.C.board mounting.
2. Device mounted on 300mm*300mm*1.6mm cu plate heatsink.
3. Resistive or Inductive load, 60 Hz. For Capacitive load derate by 20 %.

3 Electrical Characteristics(TA=25℃ Unless otherwise specified)

PARAMETER		SYMBOL	GBJ50005	GBJ5001	GBJ5002	GBJ5004	GBJ5006	GBJ5008	GBJ5010	UNIT
Maximum Instantaneous Forward Voltage at 25.0A		V_F	1.1							V
Maximum DC Reverse Current at Rated DC Blocking Voltage	T_J=25℃	I_R	10							μA
	T_J=125℃		500							

4 Characteristics Curves(TA=25℃ Unless otherwise specified)

FIG.1-FORWARD CURRENT DERATING CURVE

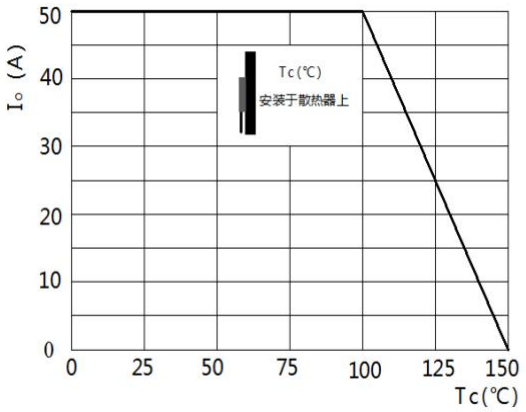

CASE TEMPERATURE,℃

FIG.2-MAXMUN NON-REPETITIVE SURGE CURRENT

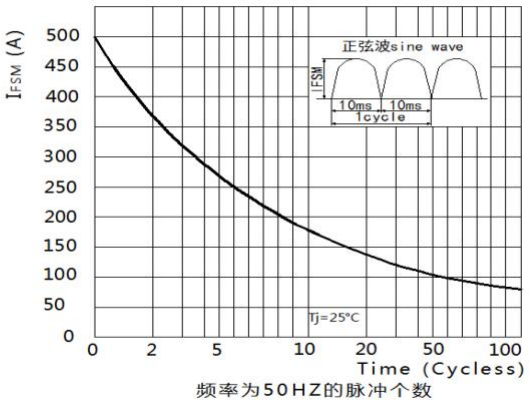

频率为50HZ的脉冲个数

FIG.3-TYPICAL REVERSE

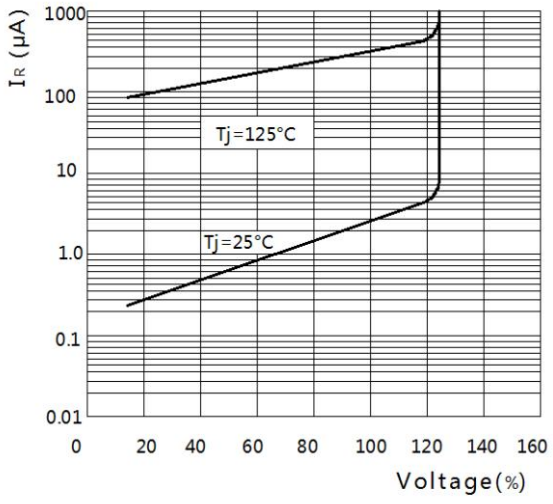

FIG.4-TYPICAL FORWARD CHARACTERISTICS

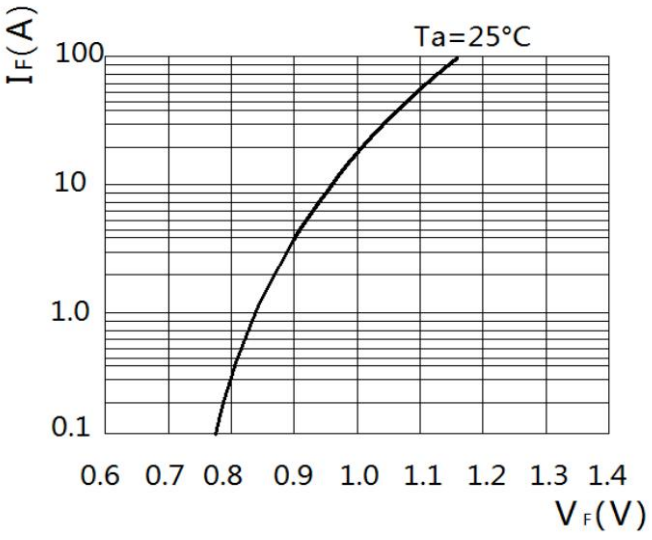

5 Package Outline Dimensions

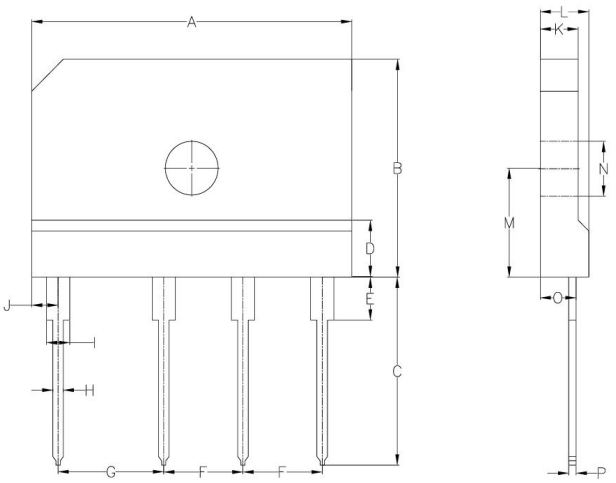

Symbol	UNIT(mm)		UNIT(inches)	
	Min	Max	Min	Max
A	29.70	30.30	1.170	1.190
B	19.70	20.30	0.780	0.800
C	17.00	18.00	0.670	0.710
D	4.80	6.10	0.190	0.240
E	3.80	4.20	0.150	0.165
F	7.30	7.70	2.87	0.303
G	9.80	10.20	0.386	0.402
H	0.90	1.10	0.035	0.043
I	1.95	2.4	0.077	0.094
J	2.30	2.70	0.090	0.106
K	3.40	3.80	0.134	0.150
L	4.40	4.80	0.173	1.89
M	10.80	11.20	0.425	0.441
N	3.10	3.70	0.122	0.145
O	2.50	2.70	0.098	0.106
P	0.55	0.80	0.022	0.0315

6 Ordering Information

PACKAGE	UNIT WEIGHT (g)	BOX (pcs)	CARTON (pcs)
GBJ	Approximate 6.82	250	2000

Disclaimer

1. All information contained in this document is for reference only. Shandong Baocheng Electronics Co.,Ltd reserves the right to revise this document, product specifications and related data at any time without prior notice. Customers shall obtain and confirm the latest product documents and specifications before purchasing or using the products.

2. Under no circumstances shall the Company be liable for any failure or damage caused by the operation of semiconductor devices beyond the maximum rated values.

3. Shandong Baocheng Electronics Co.,Ltd does not warrant the suitability of its products for any specific application and assumes no responsibility for customer's complete machine design or application debugging. Without written approval, products are prohibited from being used as key components of life support equipment. The Company shall not be liable for any consequences arising from unauthorized use.

4. No intellectual property license of Shandong Baocheng Electronics Co.,Ltd is granted, explicitly or implicitly, through this document.