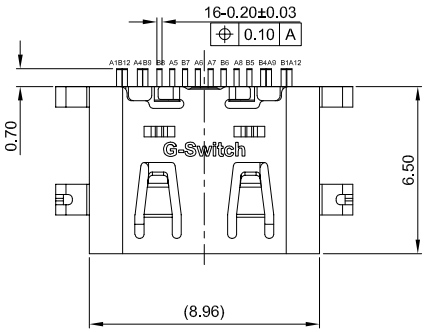

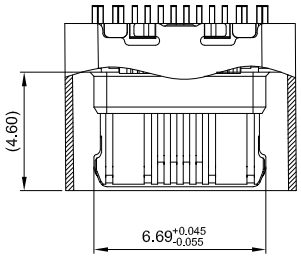

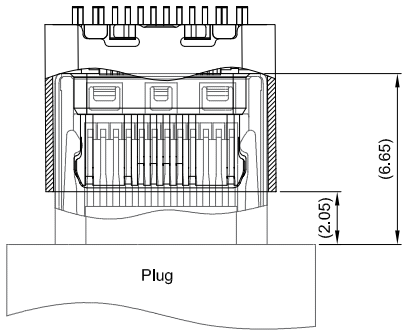

REFERENCE ASSEMBLY

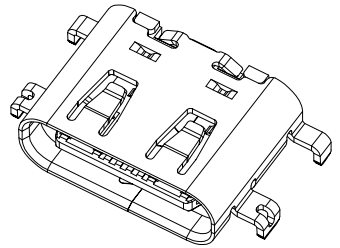

GT-USB-9014A01-XX

Contact Plated
00=G/F
01=1μ"
03=3μ"
05=5μ"
15=15μ"
30=30μ"

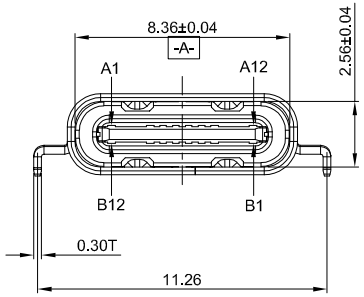

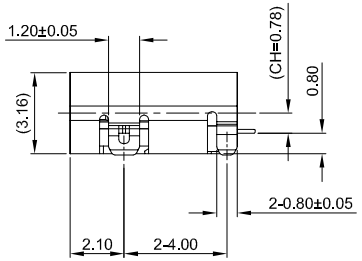

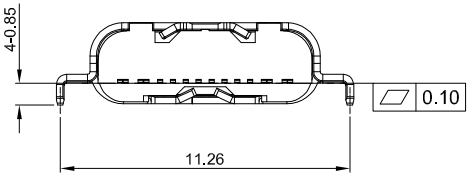

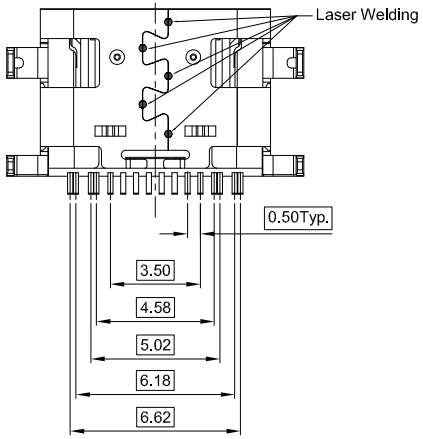

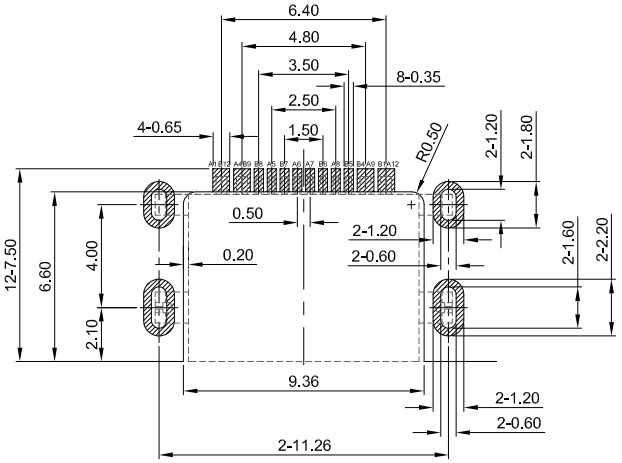

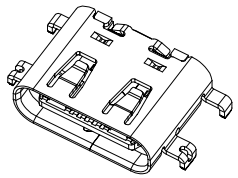

PCB REFERENCE DIAGRAM
TOLERANCE:±0.05

G-Switch USB-C Specification:
1.Current rated: 5A on vbus/1.25A
on vconn/0.25A on other
Voltage rating: 20V AC/DC
2.Withstanding voltage: 100V AC/minute
3.Contact resistance: 40mΩ Max
4.Insulation resistance: 100MΩ Min
5.Operating temperature: -40°C ~ +85°C
6.Mating force: 5N~20N
7.Unmating force: 8N~20N,after durability test: 6N~20N
8.Durability cycle:10,000 cycles
9.Compliant with: IEC62680-1-3

A1	A2	A3	A4	A5	A6	A7	A8	A9	A10	A11	A12
GND			VBUS	CC1	D+	D-	SBU1	VBUS			GND
First			First	Second	Second	Second	Second	First			First

B12	B11	B10	B9	B8	B7	B6	B5	B4	B3	B2	B1
GND			VBUS	SBU2	D-	D+	CC2	VBUS			GND
First			First	Second	Second	Second	Second	First			First

NO.	PARTS	MATERIAL	REMARKS
1	SHELL	SUS304	Ni30μ"MIN PLATED
2	MID PLATE	SUS301	——
3	HOUSING	PA46	BLACK UL 94V-0
4	TERMINALS	C7025	Au1μ"MIN PLATED ON CONTACT AREA G/F PLATED ON WELDING AREA

Pb Process Capable
RoHS Compliant EU RoHS Standards
Halogen Free Compliant Halogen Free

SCALE: 1:1 UNIT: mm
SIZE: A4

Unless otherwise General Tolerance:
X. ±0.40
X.x ±0.30
X.xx ±0.20
X.xxx ±0.10
X° ±5°

Title: Horizontal Type-C 16P Female SMT Mid-Mount0.8 CH=0.78 L=6.50mm

Model Code: GT-USB-9014A01-XX

DRAWN	CHECKED	APPROVED	DATE
Xia	Chen	Chen	2025/10/26

品赞科技 b-Switch www.dg-switch.com

REV: A0 SHEET: 1/1

品赞电子（东莞）有限公司