KNSCHA
Empowering The World

广东科尼盛电子科技有限公司
KNSCHA ELECTRONICS CO., LIMITED

规格承认书

Specification For Approval

客户名称: (Customer Name)	
产品名称: (Product Name)	高分子固态电解电容器 Conductive Polymer Aluminum Electrolytic Capacitors
客户料号: (Customer part number)	
科尼盛料号: (KNSCHA number)	KNE2220UF25V149EC0030
型号规格: (Specifications)	KNE2 220μF/25V 6.3*8mm
日期: DATE	2026.3.12

制 造 Manufacture	
核 准 APPROVAL	制 作 PREPARED
王帅	张优美

客户承认栏 CUSTOMER APPROVED		
核 准 APPROVED	确 认 CHECKED	经 办 DESIGNED

广东科尼盛电子科技有限公司

KNSCHA ELECTRONICS CO.,LIMITED.

地址：广东省东莞市东坑镇汇金展拓科技园A2-A3栋

Buildings A2-A3, Huijin Zhantuo Science and Technology Park,

Dongkeng Town, Dongguan City, Guangdong Province

电话TEL:0769-83698067 81035570 传真FAX:0769-83861559

邮箱Email：sales@knscha.com 官网Website:http://www.knscha.com

KNE2 Series

- ●Low ESR, high ripple current
- Load life of 2000 hours at 105℃
- RoHS Compliant

◆ 规格表 Specifications

项目Items	特性参数Characteristics											
使用温度范围 Category Temperture Range	-55 ~ +105℃											
额定工作电压范围 Rated Voltage Range	2.5 ~ 25V											
静电容量允许偏差 Capacitance tolerance	±20%(M) (at 20℃,120Hz)											
漏电流 Leakage Current	施加额定工作电压2分钟后读数，小于或等于规格值 (at 20℃) I≤0.2CV 或500μA（取大值） Less than or equal to the specified value. After 2 minutes application of rated Voltage at 20℃											
损耗角正切值tanδ Dissipation Factor	Rated voltage (V)	2.5	4	6.3	6.8	7.5	10	12	16	20	25	(at 20℃,120Hz)
	tanδ (Max.)	0.08					0.12					
温度特性 Low Temperture Characteristics (Max.Impedance Ratio)	Z(-25℃)/Z(+20℃)	≦1.25					(100KHz)					
	Z(-55℃)/Z(+20℃)	≦1.25										
耐久性 Endurence	105℃施加额定工作电压2000小时，恢复到20℃后，产品性能应满足以下要求 The specifications listed below shall be satisfied when the capacitors are restored to 20℃ after application of rated voltage for 2000 hours at 105℃.											
	Appearance	No significant damage										
	Capacitance change	≦±20% of the initial value										
	D.F.(tanδ)	≦150% of the specified value										
	ESR	≦150% of the specified value										
	Leakage current	≦The specified value										
耐湿负荷特性 Damp Heat (Steady State)	在60℃ 温度，湿度90%~95%RH的环境中，施加额定电压1000小时后，恢复到20℃后，产品性能应满足以下要求 The specifications listed below shall be satisfied when the capacitors are restored to 20℃after application of rated voltage for 1000 hours at 60℃,90%～ 95% RH.											
	Appearance	No significant damage										
	Capacitance change	≦±20% of the initial value										
	D.F.(tanδ)	≦150% of the specified value										
	ESR	≦150% of the specified value										
	Leakage current	≦The specified value										
浪涌电压特性 (Surge Voltage)	浪涌电压=额定电压× 1.15(V) Surge Voltage=Rated voltage × 1.15(V) 在105℃环境中，按充电30秒；放电5分30秒，连续施加浪涌电压1000次(Rc=1kΩ)，待恢复后测试，应满足以下要求 The capacitors shall be subjected to 1000 cycles each consisting of charge with the surge voltages specified at 105℃ for 30 seconds through a protective resistor (Rc=1kΩ) and discharge for 5 minutes 30 seconds											
	Appearance	No significant damage										
	Capacitance change	≦±20% of the initial value										
	D.F.(tanδ)	≦150% of the specified value										
	ESR	≦150% of the specified value										
	Leakage current	≦The specified value										

◆ 外形图Dimensions (mm)

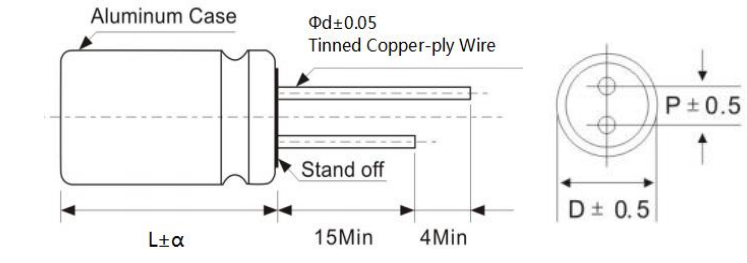

ΦD	5.5	6.3	8	10
P	2.5	2.5	3.5	5.0
Φd	0.5	0.6	0.6	0.6

α	(L < 16)1.0
	(16≦L < 22)1.5
	(L≧22)2.0

Characteristics

Part No	Cap (μF) 120Hz 20℃	Cap Tol (%) 120Hz 20℃	WV (V)	Surge Voltage (V)	tanδ 120Hz 20℃	LC (μA) 2min 20℃	ESR (mΩ) 100KHz 20℃	RC (mArms) 100KHz	Endurance (Hrs)	Dimensions(mm)					CLR
										ΦD	L	α	P	Φd	
149EC0030	220	±20	25	28.8	0.12	1100	40	2200	2000	6.3	8	1	2.5	0.6	红色

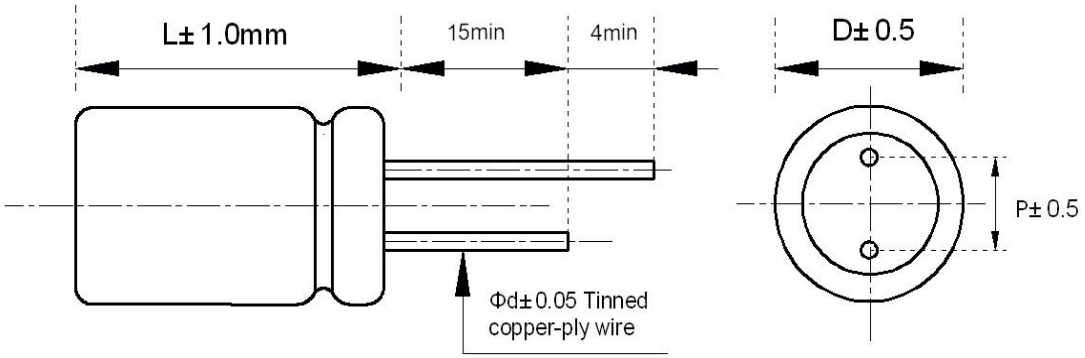

◆纹波电流补正系数 Rated Ripple Current Coefficient

频率 Frequency(Hz)	120Hz≦F < 1KHz	1KHz≦F < 10KHz	10KHz≦F < 100KHz	100KHz≦F < 500KHz
系数Case code	0.05	0.30	0.70	1.00

The structure chart of solid electrolytic capacitors
固态电容器结构图

Capacitor
电容器

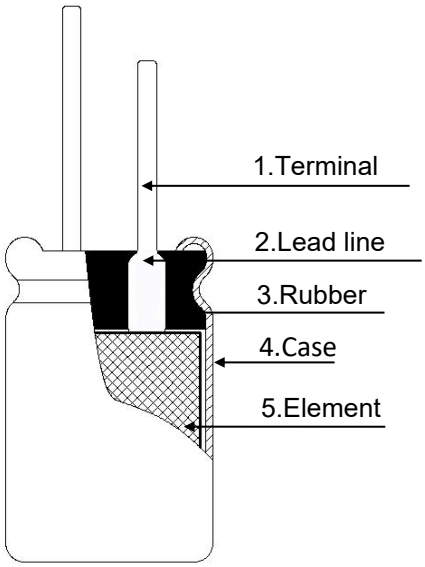

Stretch Out View of Element
素子展开图

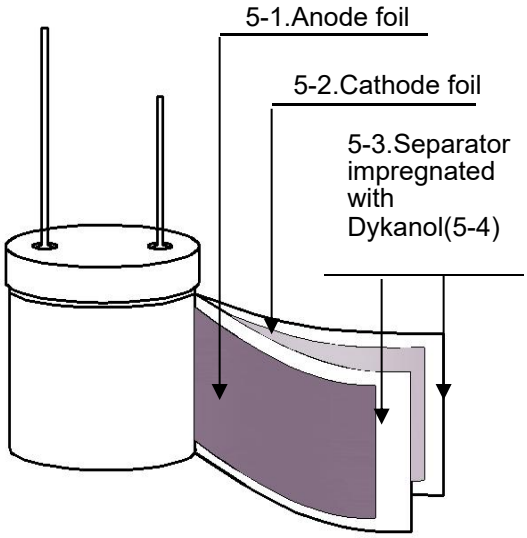

Cross Section of Terminal
CP 线横向剖面图

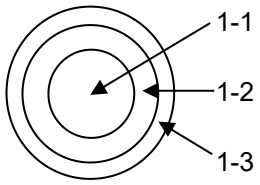

1-1.Fe
铁芯

1-2. Copper plate (≥10um)
镀铜层

1-3.Tin Plate(≥8um)
镀锡层

Item	Component 组成材料	Materials 材质	备注
1	Terminal CP线	Tinned copper-ply wire 镀铜镀锡铁线	
2	Lead line 引出线	Aluminum, 99.95% or 99.97% 纯度为99.95%或99.97%的金属铝片	
3	Rubber 胶盖	RE IIR rubber RE IIR 橡胶	
4	Case 铝壳	Aluminum, 99.8% 纯度为99.8%的金属铝	
5-1	Anode Foil 阳极箔	Formed aluminum, 99.99% or 99.98% 纯度99.99%或99.98%的化成铝箔	
5-2	Cathode Foil 阴极箔	Etched aluminum, 99.7% or 99.4% 纯度99.7%或99.4%的腐蚀铝箔	
5-3	Separator 电解纸	Manila,pulp,kraft,etc. 马尼拉纸、纸浆、牛皮纸等	
5-4	Dykanol 介质材料	Poly3,4-Ethylene Dioxy Thiophene 聚3，4-乙烯基二氧噻吩	

◆操作注意事项 Operating Precautions

1、极性Polarity

此款电容器是具有正负极的固态铝电解电容，使用中不可反接，若接反，则电容会因为漏电流不断增大或短路而造成寿命缩短。

This CAP is a solid aluminum electrolytic capacitor with positive and negative electrodes. Do not reverse the polarity when using.If it is used with the polarities reversed, its life may shorten because of increasing leakage current or short circuit.

2、禁止电路 Prohibited circuits

因为焊接及其它动作可造成电容的漏电流增加，此款电容器不可使用在下列电路中：

Since problems can be expected due to leakage current increasing during soldering and other processes, This CAP cannot be used in the following circuits：

1)高阻抗电路 High impedance circuits；

2)耦合电路 Coupling circuits；

3)时间常数电路 Time constant circuits；

4)为提高耐电压而串联两个或多个电容于电路中

Connection of two or more capacitors in series for higher withstand voltage；

5)电路因漏电流过大而有坏的影响 Circuits to get bad influence by big leakage current

*除漏电流的波动上升外，电容的使用条件如在承认书中规定的高温和低温，温热和耐受性条件都会影响电容量。若电容作为时间常数电路使用，因其对电容量的变动的敏感性，电容量的改变会造成影响。若要将其作为时间常数电路使用，同时若因电压原因要串联多个电容，请联系敝司。

* In addition to the leakage current fluctuation above, the operational conditions such as characteristics at high and low temperature, damp heat and endurance stipulated in the specifications will affect the capacitance.The fluctuation of the capacitance may cause problem if it is used as a time constant capacitor, which is extremely sensitive to the fluctuation of the capacitance.Do not use it as a time constant capacitor.Additionally, please contact our company. for usage of two or more capacitor in series for voltage proof.

3、电压 Over voltage

电压若超过额定电压，即便只是一瞬间也可能造成短路

Over voltage exceeding the rated voltage may not be applied even for an instant as if may cause a short circuit.

4、突然充放电 Sudden charge and discharge

突然的充放电是不可取的（为了维持高的可靠性）。为防止突然的充放电造成电容短路或漏电增大，电路中应加上一个保护电路用以分流过大的电流。若瞬间电流超过10A或超过10倍允许纹波电流，要使用保护电路。在测试漏电流时请加上一个1kΩ的电阻用以充放电。

Sudden charge and discharge restricted(for maintenance of high-proof reliability). A protection circuit is recommended for when a sudden charge or discharge causes excessive rush current because this is a main cause of short circuits and large leakage current.Use protection circuits if the rush current exceeds 10A. The rush current exceeds 10×the maximum allowable ripple current of capacitor.Be sure to insert a protection resistor of about 1kΩ for charge and discharge when measuring the leakage current.

5、使用温度和纹波电流 Operating temperature and ripple current

如果电容器的使用温度超过了上限温度或是有过载纹波电流通过，则有较大可能使电容器寿命缩短，或漏电流增大，造成电容器失效。

If capacitor is used at a temperature higher than the upper category temperature, or excess ripple current flows through capacitor, there are high possibilities of life cycle reduction or leakage current increasing to cause capacitor defective.

6、漏电流 Leakage current

漏电流会因焊接条件而有些微的上升，加载直流电压可使电容自我修复，漏电流逐渐减小。

The leakage current of capacitor may increase slightly by soldering conditions. The application of DC voltage enables the capacitors to be repaired by itself and this leads the leakage current to be smaller gradually.

7、使用电压 Applied voltage

为了保证电容器的可靠性，加载到电容器上的电压最好小于其额定电压的80%。直流加交流电压的峰值应小于额定电压。

For the reliability of CAP, it is recommended that the voltage applied to CAP should beless than 80% of the rated voltage.Peak value of the the dc and ac voltage should not exceed its rated voltage.

◆ 标示 Marking

每个部品的表面或最小包装单位依下记事项不易消失的方法来标示.

The following items shall be marked indelibly and legibly on specimen or each unit pack.

1.系列和商标 Series and trademark.

2.静电容量 Capacitance

3.额定电压 Work voitage

4.负极性 Negative polarity

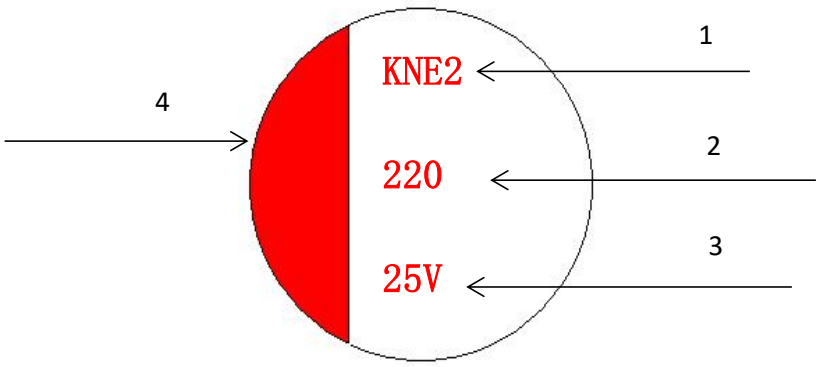

注：

1.本承认书中所有数据如有异议，以中文为准。

2.在使用电解电容器时，请参考承认书内的使用标准，由于客户使用超出承认书相关参数和范围，如额定电压、额定纹波电流、温度等，不在我司质量保证范围内。

3.由于电路设计不当或缺陷造成的电解电容器损坏，不在我司质量保证范围内。

4.由于固态电容设计的特点不同，为不影响电容性能，要注意电容脚距的匹配性，在测试和使用时电容引脚不能受到机械外力引起电容脚距发生变化。