UNIVERSAL HIGH BRIGHTNESS LED DRIVER

Features

- >90% Efficiency
- 8V to 450V input range
- Constant-current LED driver
- Applications from a few mA to more than 1A output
- LED string from one to hundreds of diodes
- PWM Low-Frequency Dimming via Enable pin



DIP-8



SOP-8

Ordering Information

DEVICE	Package Type	MARKING	Packing	Packing Qty
HV9910N/HG	DIP-8	HV9910	REEL	2000pcs/reel
HV9910M/TR-HG	SOP-8	HV9910	REEL	2500pcs/reel

Description

The HV9910 is a PWM high-efficiency LED driver control IC. It allows efficient operation of High Brightness (HB) LEDs from voltage sources ranging from 8VDC up to 450VDC. The HV9910 controls an external MOSFET at fixed switching frequency up to 300kHz. The frequency can be programmed using a single resistor. The LED string is driven at constant current rather than constant voltage, thus providing constant light output and enhanced reliability. The output current can be programmed between a few milliamps and up to more than 1.0A.

HV9910 uses a rugged high voltage junction isolated process that can withstand an input voltage surge of up to 450V. Output current to an LED string can be programmed to any value between zero and its maximum value by applying an external control voltage at the linear dimming control input of the HV9910. The HV9910 provides a low-frequency PWM dimming input that can accept an external control signal with a duty ratio of 0-100% and a frequency of up to a few kilohertz.

Applications

- DC/DC or AC/DC LED Driver applications
- RGB Back lighting LED Driver
- Back Lighting of Flat Panel Displays
- General purpose constant current source
- Signage and Decorative LED Lighting
- Automotive

Functional Block Diagram

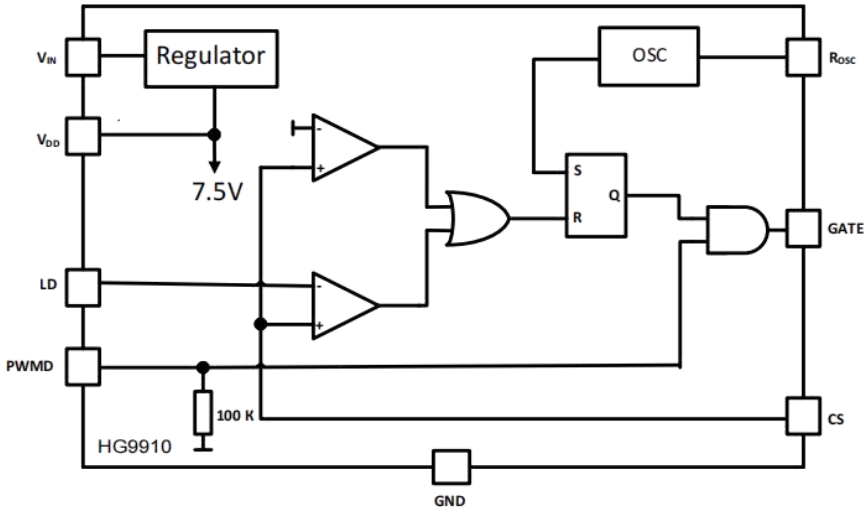

Pin Configuration

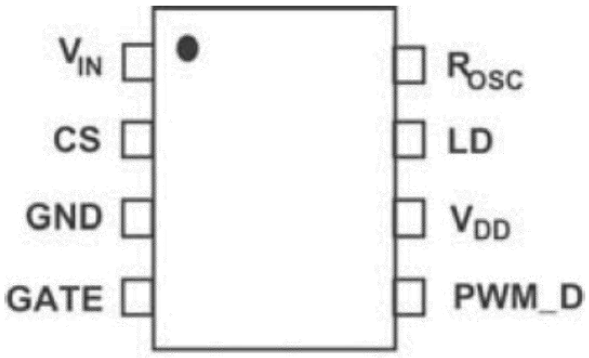

8-Pin DIP/SOP

Pin Description

Pin #	Name	Description
1	VIN	Input voltage 8V to 450V DC
2	CS	Senses LED string current
3	GND	Device ground
4	GATE	Drives the gate of the external MOSFET
5	PWMD	Low Frequency PWM Dimming pin, also Enable input. Internal 100kΩ pull-down to GND
6	VDD	Internally regulated supply voltage. 7.5V nominal. Can supply up to 1mA for external circuitry. Asufficient storage capacitor is used to provide storage when the rectified AC input is near the zero crossings.
7	LD	Linear Dimming by changing the current limit threshold at current sense comparator
8	Rosc	Oscillator control. A resistor connected between this pin and ground sets the PWM frequency.

Electrical Characteristics

Absolute Maximum Ratings

Parameter	Rating	Unit
VIN to GND	-0.5 to +470	V
CS	-0.3V to +15.8	V
LD, PWMD to GND	-0.3V to +15.1	V
GATE to GND	-0.3V to +15.8	V
VDD MAX	13.5	V
ESD Capability, all pads except Pad 1 (VIN) and Pad 7,8 (VDD)	2.0	kV
Maximum Voltage on Pad 1 (VIN) and Pad 7,8 (VDD)	470	V
Operating Temperature Range	-40 to +85	ºC
Junction Temperature	+125	ºC
Lead Temperature (TL) (Soldering, 10 seconds)	+260	ºC
Storage Temperature Range	-65 to +150	ºC
Power Dissipation @+25 ºC for DIP-8	900	mW
Power Dissipation @+25 ºC for SOP-8	630	mW

Note: Stresses above those listed under “Absolute Maximum Ratings” may cause permanent damage to the device. This is a stress rating only and functional operation of the device at those or any other conditions, above those indicated in the operational listings of this specification, is not implied. Exposure to maximum rating conditions for extended periods may affect device reliability.

Electrical Characteristics1

Symbol	Description	Min	Typ	Max	Unit	Conditions
V_{INDC}	Input DC supply voltage range	8.0		450	V	DC input voltage
I_{INsd}	Shut-Down mode supply current		0.5	1	mA	Pin PWM_D to GND, VIN= 8V
V_{DD}	Internally regulated voltage	7.0	7.5	8.0	V	VIN = 8-450V, IDD(ext)=0, pin Gate open
V_{DDmax}	Maximal pin VDD voltage			13.5	V	When an external voltage applied to pinVDD
$I_{DD(ext)}$	VDD current available for external circuitry1			1.0	mA	VIN = 8-100V
UVLO	VDD undervoltage lockout threshold	6.45	6.7	6.95	V	VIN rising
ΔUVLO	VDD undervoltage lockout hysteresis		500		mV	VIN falling
$V_{EN(lo)}$	Pin PWMD input low voltage			1.0	V	VIN = 8-450V
$V_{EN(hi)}$	Pin PWM_D input high voltage	2.4			V	VIN = 8-450V
R_{EN}	Pin PWM_D pull-down resistance	50	100	150	кOhm	VEN = 5V
$V_{CS(hi)}$	Current sense pull-in threshold voltage	225	250	275	mV	@TA = -40°C ÷ +85°C
$V_{GATE(hi)}$	GATE high output voltage	V_{DD} -0.3		V_{DD}	V	I_{OUT}= 10 mA
vGATE(lo)	GATE low output voltage	0		0.3	V	I_{OUT} = -10 mA
f_{OSC}	Oscillator frequency	20 80	25 100	30 120	кHz кHZ	Rosc = 1.00 MOhmRosc = 226 кOhm
D_{MAXhf}	Maximum Oscillator PWM Duty Cycle			100	%	FPWMhf = 25kHz, at GATE, CS to GND
V_{LD}	Linear Dimming pin voltage range	0		250	mV	@TA = <85°C, Vin = 12 V
T_{BLANK}	Current sense blanking interval	150	215	280	ns	V_{CS} = 0.55V_{LD}, V_{LD} = V_{DD}
t_{DELAY}	Delay from CS trip to GATE lo			300	ns	Vin = 12 V, V_{LD} = 0.15, V_{cs} = от 0 до0.22V после T_{BLANK}
t_{RISE}	GATE output rise time2		30	50	ns	C_{GATE} = 500 pF
t_{FALL}	GATE output fall time2		30	50	ns	C_{GATE} = 500 pF

1. Also limited by package power dissipation limit, whichever is lower

Physical Dimensions

SOP-8

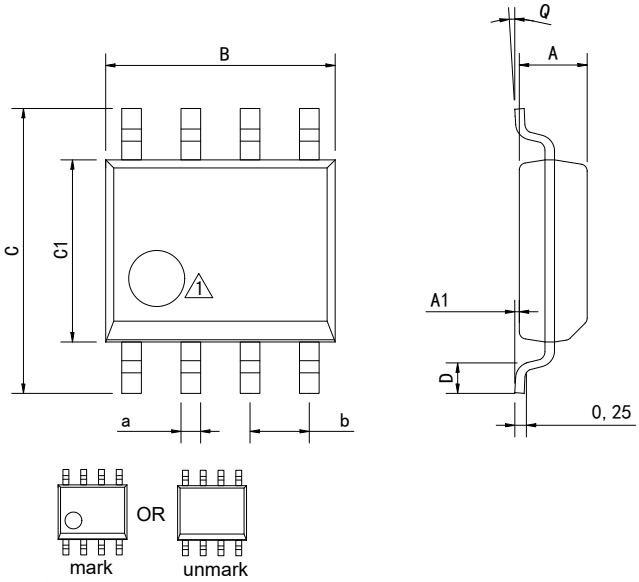

Dimensions In Millimeters(SOP-8)									
Symbol:	A	A1	B	C	C1	D	Q	a	b
Min:	1.35	0.05	4.90	5.80	3.80	0.40	0°	0.35	1.27 BSC
Max:	1.55	0.20	5.10	6.20	4.00	0.80	8°	0.45	

DIP-8

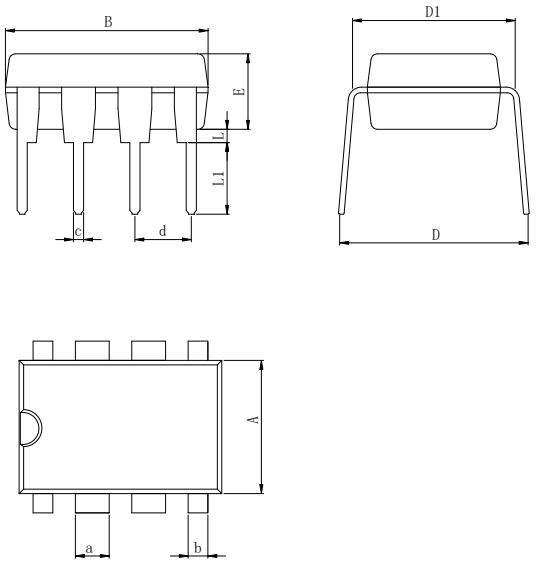

Dimensions In Millimeters(DIP-8)											
Symbol:	A	B	D	D1	E	L	L1	a	b	c	d
Min:	6.10	9.00	8.10	7.42	3.10	0.50	3.00	1.50	0.85	0.40	2.54 BSC
Max:	6.68	9.50	10.9	7.82	3.55	0.70	3.60	1.55	0.90	0.50	

Revision History

REVISION NUMBER	DATE	REVISION	PAGE
V1.0	2015-3	New	1-8
V1.1	2019-8	Document Reformatting	1-8

IMPORTANT STATEMENT:

Huaguan Semiconductor reserves the right to change products and services offered without prior notice. Customers should obtain the latest relevant information before placing orders and verify that such information is current and complete. Huaguan Semiconductor assumes no responsibility or liability for altered documents.

Customers are responsible for complying with safety standards and implementing safety measures when using Huaguan Semiconductor products in system design and end-product manufacturing. You assume full responsibility for: selecting the appropriate Huaguan Semiconductor products for your application; designing, validating, and testing your application; and ensuring that your application complies with applicable standards and all other safety, security, or other requirements. This is to prevent potential risks that may lead to personal injury or property damage.

Huaguan Semiconductor products are not approved for use in life support, military, aerospace, or other high-risk applications. Huaguan products are neither intended nor warranted for use in such systems or equipment. Any failure or malfunction may lead to personal injury or severe property damage. Such applications are deemed "Unsafe Use." Unsafe Use includes, but is not limited to: surgical and medical equipment, nuclear energy control equipment, aircraft or spacecraft instruments, control or operation of vehicle power, braking, or safety systems, traffic signal instruments, all types of safety devices, and any other applications intended to support or sustain life. Huaguan Semiconductor shall not be liable for consequences resulting from Unsafe Use in these fields. Users must independently evaluate and assume all risks. Any issues, liabilities, or losses arising from the use of products beyond their approved applications shall be solely borne by the user. Users may not claim any compensation from Huaguan Semiconductor based on these terms. If any third party claims against Huaguan Semiconductor due to such Unsafe Use, the user shall compensate Huaguan Semiconductor for all resulting damages and liabilities.

Huaguan Semiconductor provides technical and reliability data (including datasheets), design resources (including reference designs), application or other design advice, web tools, safety information, and other resources for its semiconductor products. However, no guarantee is made that these resources are free from defects, and no express or implied warranties are provided. The use of testing and other quality control techniques is limited to Huaguan Semiconductor's quality assurance scope. Not all parameters of each device are tested.

Huaguan Semiconductor's documentation authorizes you to use these resources only for developing applications related to the products described herein. You are not granted rights to any other intellectual property of Huaguan Semiconductor or any third party. Any other reproduction or display of these resources is strictly prohibited. You shall fully indemnify Huaguan Semiconductor and its agents against any claims, damages, costs, losses, and liabilities arising from your use of these resources. Huaguan Semiconductor shall not be held responsible.