1.Description

The UMW FP6291LR-G12 is a current-mode boost DC-DC converter. Its pulse-width modulation circuit and built-in 0.2Ω power MOSFET enable high power efficiency. Its internal compensation network also reduces the number of external components by up to six. The non-inverting input of the error signal amplifier is connected to a 0.6V precision reference voltage, and the internal soft-start function reduces instantaneous current surges. The UMW FP6291LR-G12 is packaged in an SOT23-6 package, saving PCB space in applications

2.Features

- Adjustable output up to 12V
- Internal fixed PWM frequency: 1.0MHz
- Precision feedback reference voltage: 0.6V (±2%)
- Internally, it has a 0.2Ω, 2.5A, 16V power MOSFET
- Turn-off current: 0.1μA
- Over-temperature Protection
- Over-voltage Protection
- Adjustable overcurrent protection: 0.5A~2.5A
- Packaging form: SOT23-6

3.Applications

- Chargers
- Handheld Devices
- Portable Products

4.Pinning Information

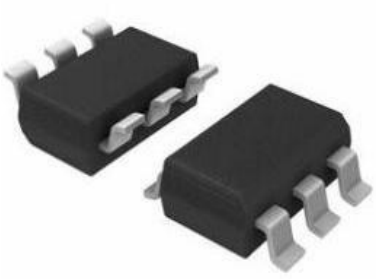

5.Functional Block Diagram

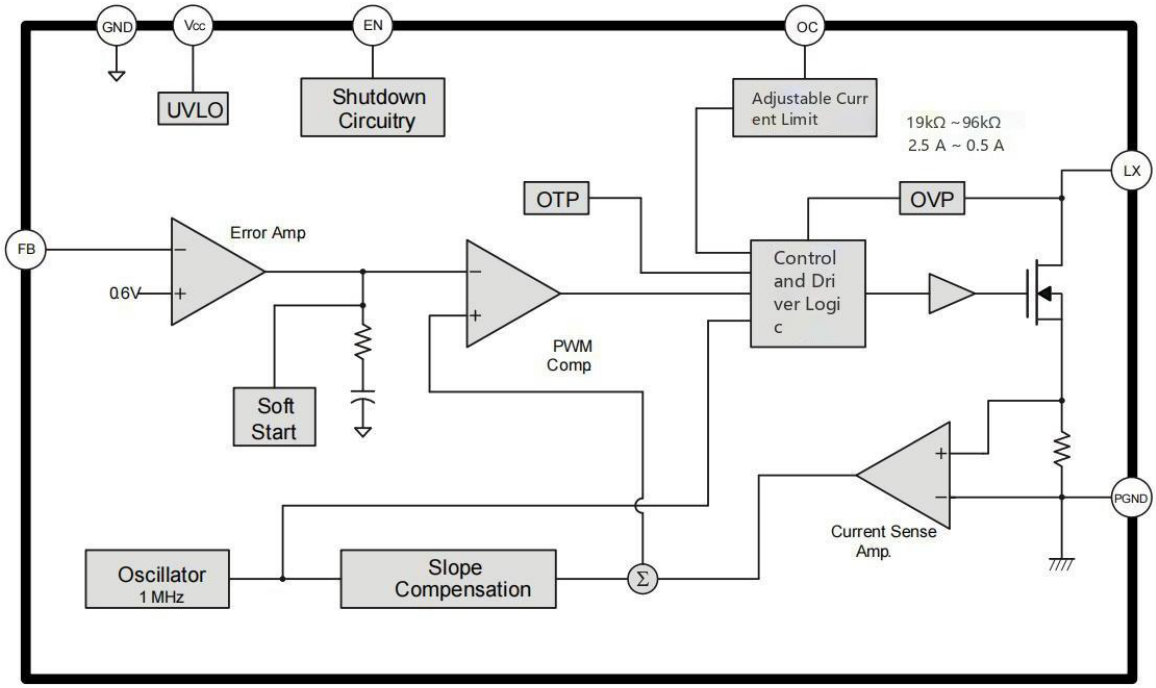

6.Pin Description

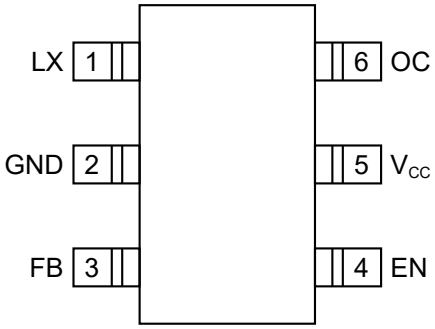

Pin Numbers	Pin Names	I/O	Descriptions
1	LX	O	Power Switch Output
2	GND	P	IC Ground
3	FB	I	Error Amplifier Inverting Input
4	EN	I	Enable Control (Active High)
5	V_{CC}	P	IC power supply
6	OC	I	Adjustable Current Limit (Floating Available)

7.Limiting Parameters

Parameter	Symbol	Value	Units
Power Supply Voltage	V_{CC}	6	V
LX Voltage	V_{LX}	16	V
EN,FB Voltage	V_{EN},V_{EN}	6	V
Power Dissipation	P_D	455	mW
Thermal Resistance (Note 1)	θ_{JA}	220	°C/W
Junction Temperature	T_J	150	°C
Operating Temperature	T_A	-20 to 85	°C
Storage Temperature	T_S	-65 to 150	°C
Lead temperature (welding, 10s)	T_W	260	°C

Note 1: θ_{JA} is measured on a low effective thermal conductivity test board according to the JEDEC 51-3 thermal measurement standard, under natural convection at T_A=25°C. Note 2: Exceeding the above limits may cause permanent damage to the chip.

8.Recommended Working Conditions

Parameter	Symbol	Min	Max	Units
Power Supply Voltage	V_{CC}	2.6	5.5	V

9.Electrical Characteristics (V_{CC}=3.3V, Tamb=25°C)

Parameter	Symbol	Conditions	Min	Typ	Max	Units
System Power Input						
Input Voltage Range	V_{CC}		2.6		5.5	V
Undervoltage Lockout	V_{UVLO}			2.2		V
Undervoltage Output Hysteresis				0.1		V
Quiescent Current	I_{ST}	V_{FB}=0.66V, No Switching		0.19		mA
Average Supply Current	I_{OP}	V_{FB}=0.55V, Switching		1.5		mA
Shutdown Current	I_{OFF}	V_{EN}=GND		0.1		μA
Oscillator						
Operating Frequency	F_{OSC}	V_{FB}=1.0V	0.8	1	1.2	MHz
Rate of Change of Frequency with Voltage	Δf /ΔV	V_{CC}=2.6V ~ 5.5V		5		%
Maximum Duty Cycle	T_{DUTY}			90		%
Operating Frequency	F_{OSC}	V_{FB}=1.0V	0.8	1	1.2	MHz
Rate of Change of Frequency with Voltage	Δf /ΔV	V_{CC}=2.6V ~ 5.5V		5		%
Maximum Duty Cycle	T_{DUTY}			90		%
Reference Voltage						
Reference Voltage	V_{REF}		0.588	0.6	0.612	V
Linearity		V_{CC}=2.6V ~ 5.5V		0.2		%/V
Enable Control						
Enable Voltage	V_{ENH}		0.96			V
Shutdown Voltage	V_{ENL}				0.6	V
MOSFET						
On-Resistance	$R_{DS(ON)}$	I_{LX}=2A		0.2		Ω
Protection						
OCP Current	I_{OCP}			25		A
Adjustment range of OCP Current	I_{OCP}	External adjustment resistor: 19K~96K	0.5		2.5	A
OTP Temperature	T_{OTP}			150		°C

10.1 Typical Characteristic

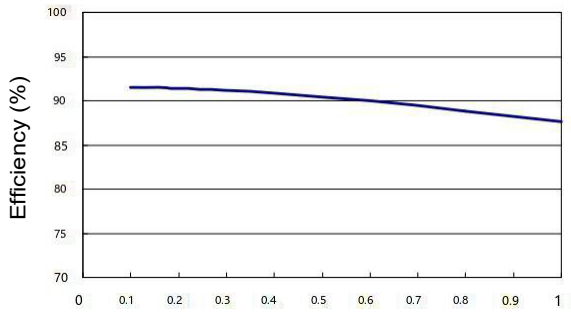

Figure 1: Efficiency vs. Output Current

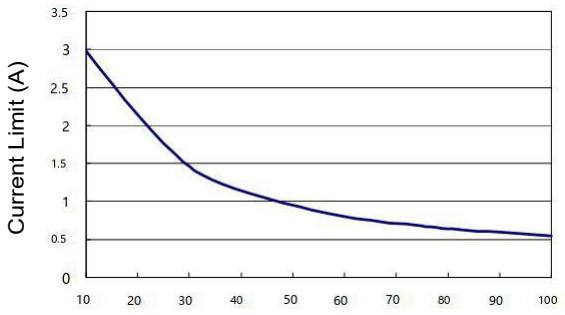

Figure 2: Current Limit vs. External Resistance (Roc)

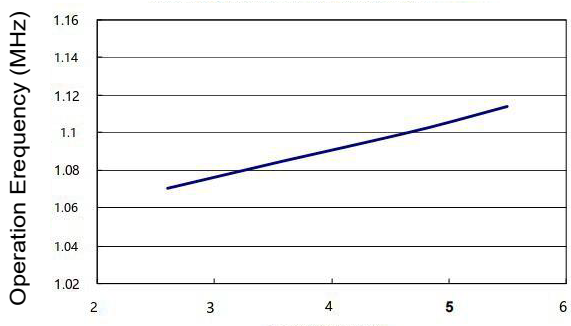

Figure 3: Operation Frequency vs. Input Voltage

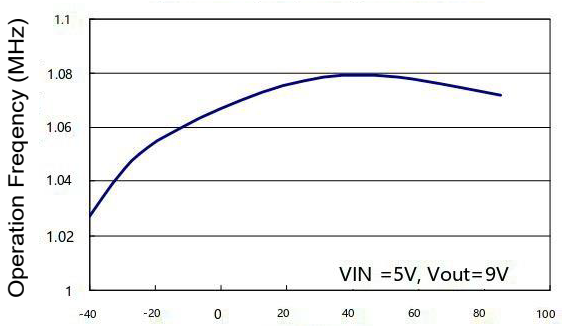

Figure 4: Operation Frequency vs.Temperature

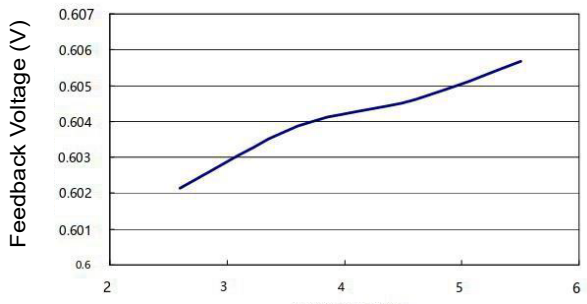

Figure 5: Reference Voltage vs. Input Voltage

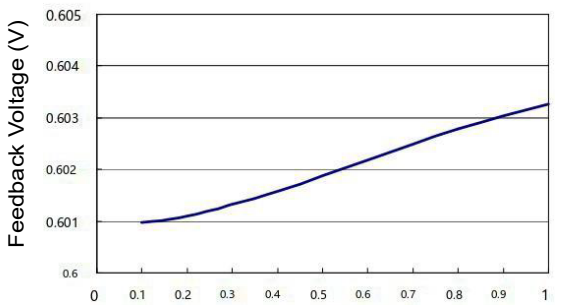

Figure 6: Reference Voltage vs. Output Current

10.2 Typical Characteristic

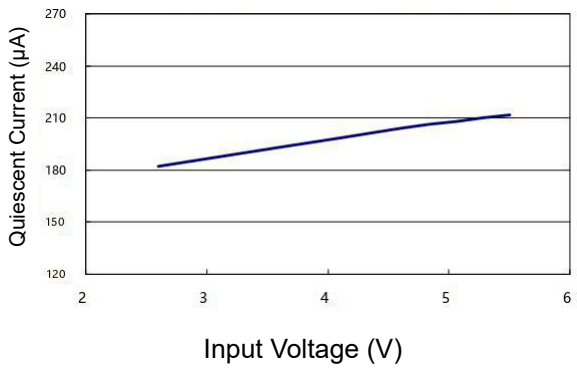

Figure 7: Quiescent Current vs. Input Voltage

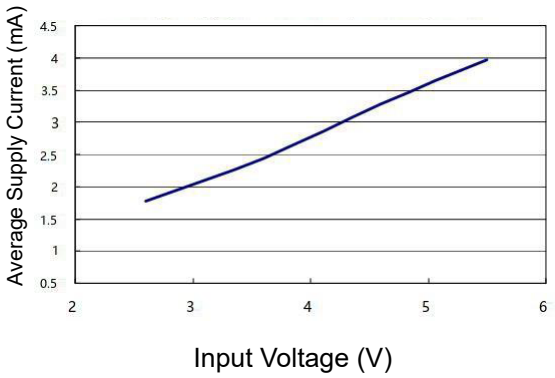

Figure 8: Average Supply Current vs. Input Voltage

11.Function Description

Operation

The UMW FP6291LR-G12 is a current-mode boost converter with a constant switching frequency of 1MHz and PWM pulse width modulation operation. An integrated 16V / 2.5A / 0.2Ω MOSFET provides a high output voltage. Its control loop structure is peak current mode control, so a slope compensation resistor is added to the current signal.Circuit, enabling stable operation with a duty cycle greater than 50%.

Soft Start Function

A soft-start circuit is integrated into the UMW FP6291LR-G12 to prevent inrush current during power-on. With the integrated soft-start circuit, the output of the error amplifier is clamped by the internal soft-start function, causing the PWM pulse width to increase slowly, thereby reducing the input inrush current. Current or Limit can be programmed to control the peak switching current by adjusting the resistor between OC and GND. The resistor value is set between 19k and 96k, and the corresponding current limit will be set to 2.5A to 0.5A. Keep the connection on this pin as short as possible and do not connect capacitors to this pin.Set the overcurrent protection point according to the following formula:

$$I_{OCP}= \frac{48000}{R3}$$

Over Temperature Protection (OTP)

When the internal junction temperature exceeds 150°C, the UMW FP6291LR-G12 will automatically turn off the power MOSFET. When the junction temperature drops to 30°C below the OTP threshold temperature, the power MOSFET will turn off.

Overvoltage Protection (OVP)

In some cases, the resistor divider is floating, which will lead to This causes the PWM signal to operate at maximum duty cycle, and the output voltage is boosted higher and higher. When the output voltage exceeds the OVP threshold level, the power MOSFET will immediately turn off. The OVP threshold of UMW FP6291LR-G12 is 15V.

Inductor Selection

The inductance value depends on the specific conditions; for general applications, an inductance value of 3.3uH to 4.7uH is recommended. There are three important inductor specifications: DC resistance, saturation current, and core losses. Lower DC resistance results in better power efficiency, and also. Greatly avoid inductance saturation, thereby ensuring the stability of the circuit system and reducing core losses at 1 MHz.

Capacitor Selection

The output capacitor needs to maintain the DC voltage. Low ESR capacitors are preferred to reduce output voltage ripple. X5R and X7R ceramic capacitors are recommended, as these capacitors have lower equivalent series resistance (ESR) and a wider operating temperature range.

Diode Selection

Schottky diodes with fast recovery time and low forward voltage are recommended, ensuring that the diode's average current and peak rated current exceed the average output current and peak inductor current. Furthermore, the diode's reverse breakdown voltage must exceed the output voltage.

Output Voltage Programming

The output voltage is set from the output voltage to FB by a resistive voltage divider, and the output voltage is:

$$V_{OUT}= 0.6V(1+ \frac{R1}{R2})$$

12.Typical Application Diagram

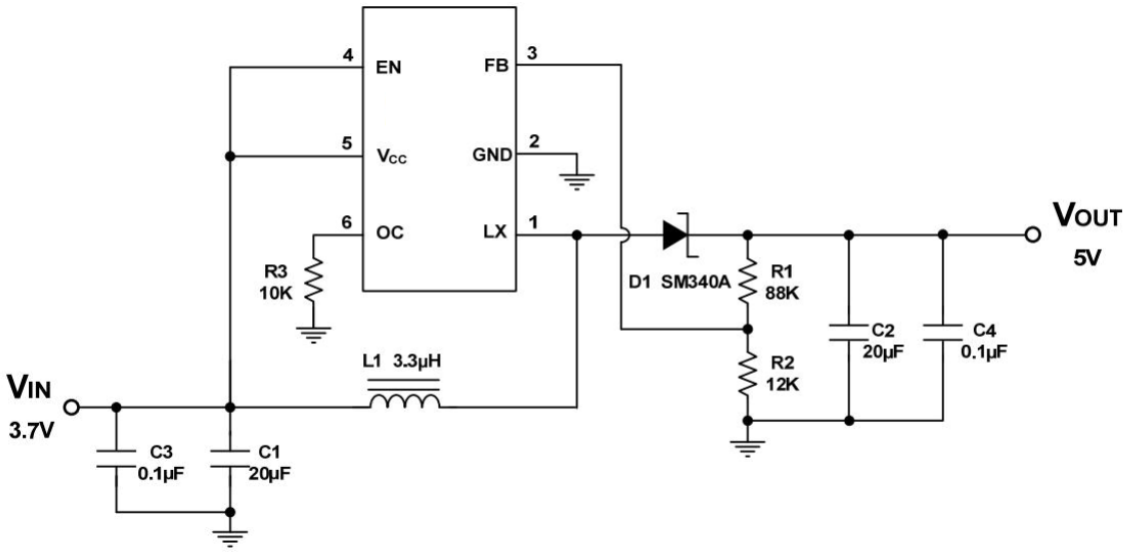

13.Layout Considerations

1. Power supply wiring, including GND, LX, and V_{CC} wiring, should be as short, wide, and direct as possible;

2. Avoid routing the V_{OUT} trace near V_{CC}. When the system receives noise, it can cause excessive ripple, exceeding the absolute maximum rating of V_{CC} and damaging the chip.

3. The nodes of LX, L, and D switches require wide and short wiring to reduce EMI;

4. The CIN pin should be placed as close as possible to the V_{CC} pin to maintain a stable input voltage and filter out pulses in the input current.

5. The resistive voltage divider R1 and R2 must be connected as closely as possible to the FB pin;

6. FB is a sensitive node and should be kept away from the switch node LX;

7. The GND pins of IC, CIN, and COUT should be close to the ground plane

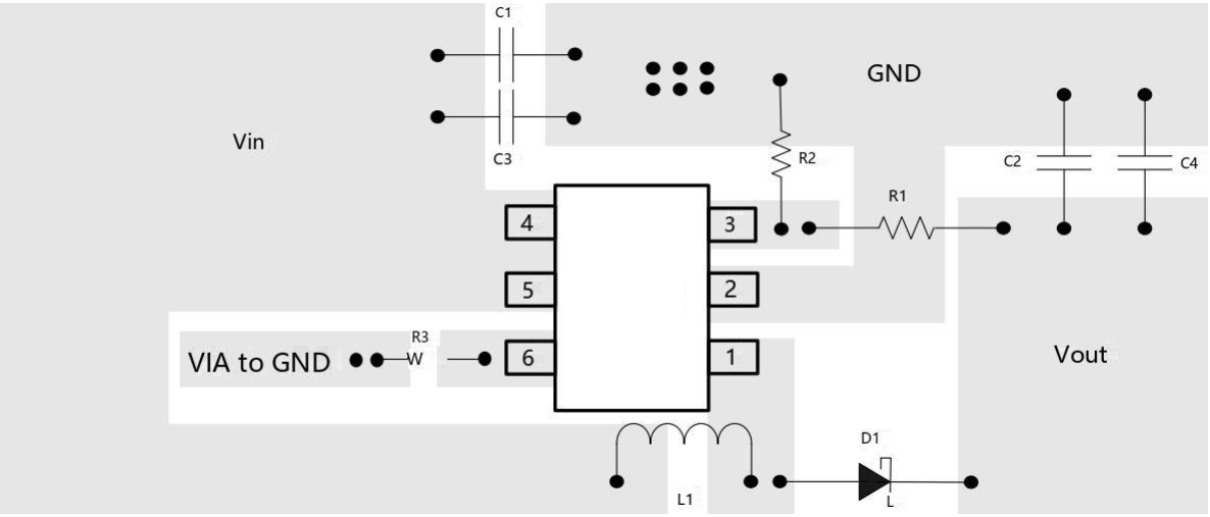

Recommended Layout

14.SOT23-6 Package Outline Dimensions

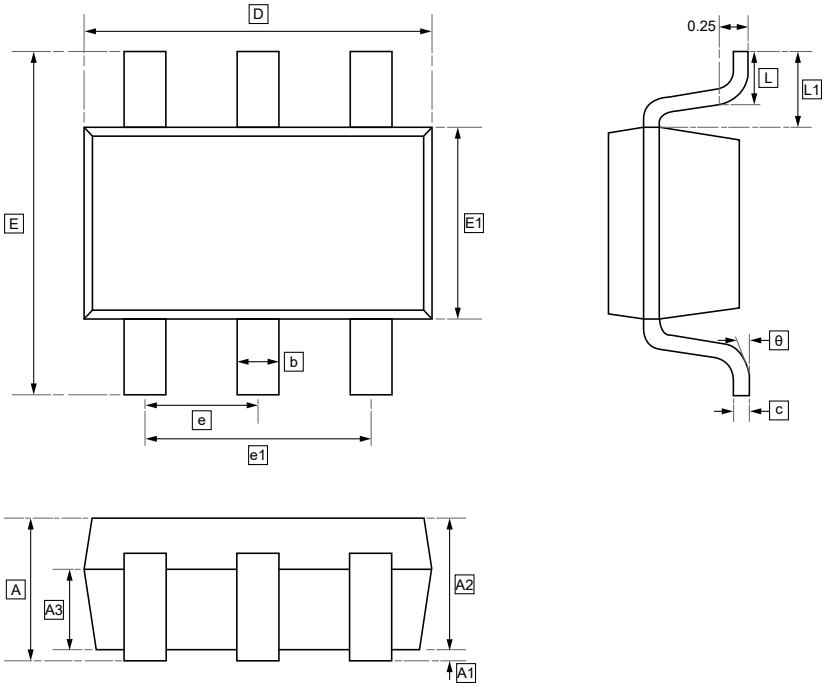

DIMENSIONS (mm are the original dimensions)

Symbol	A	A1	A2	A3	b	c	D	E	E1	e	e1	L
Min	-	0.01	1.00	0.60	0.33	0.11	2.82	2.60	1.50	0.90	1.90	0.30
Max	1.25	0.08	1.20	0.70	0.41	0.20	3.02	3.00	1.70	1.00	BSC	0.60

Symbol	L1	θ
Min	0.55	0°
Max	0.75	8°

15.Ordering Information

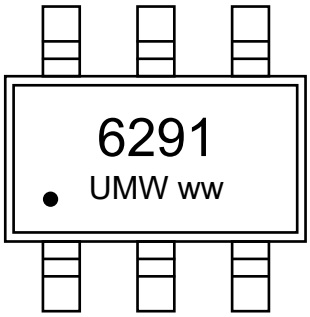

ww: Week Code

Order Code	Package	Base QTY	Delivery Mode
UMW FP6291LR-G12	SOT23-6	3000	Tape and reel

16.Disclaimer

UMW reserves the right to make changes to all products, specifications. Customers should obtain the latest version of product documentation and verify the completeness and currency of the information before placing an order.

When applying our products, please do not exceed the maximum rated values, as this may affect the reliability of the entire system. Under certain conditions, any semiconductor product may experience faults or failures. Buyers are responsible for adhering to safety standards and implementing safety measures during system design, prototyping, and manufacturing when using our products to prevent potential failure risks that could lead to personal injury or property damage.

Unless explicitly stated in writing, UMW products are not intended for use in medical, life-saving, or life-sustaining applications, nor for any other applications where product failure could result in personal injury or death. If customers use or sell the product for such applications without explicit authorization, they assume all associated risks.

When reselling, applying, or exporting, please comply with export control laws and regulations of China, the United States, the United Kingdom, the European Union, and other relevant countries, regions, and international organizations.

This document and any actions by UMW do not grant any intellectual property rights, whether express or implied, by estoppel or otherwise. The product names and marks mentioned herein may be trademarks of their respective owners.