UMW PT4115M

30V/1.2A High Dimming Ratio LED Constant Current Driver

1.Description

UMW PT4115 is a step-down constant current driver chip for high-brightness LEDs. The UMW PT4115 uses very few external components, providing a highly cost-effective solution for MR16 LED lamp cups, LED stage lights, automotive LED lights, solar LED lights, and LED streetlights. Its input voltage range is from 5V to 30V, and the output current is set through a sampling resistor. The maximum output current per LED can reach 1.2A. The LED current accuracy is up to ±3%. The UMW PT4115 can accept analog dimming of 0.5-2.5V and PWM dimming with a wide frequency range via the DIM pin. When the DIM voltage is below 0.3V, the power switch is turned off, entering a low-current standby state. The UMW PT4115 has a built-in power switch that can drive multiple 1-watt or 3-watt LEDs depending on the input voltage. It also includes over-temperature protection, LED short-circuit and open-circuit protection, freewheeling diode short-circuit protection, and RCS resistor short-circuit protection.

2.Features

- Minimal external components
- 5V to 30V Input Voltage Range
- ±3% output current accuracy
- LED Open Circuit Protection
- LED Short Circuit Protection
- Over-temperature protection
- Maximum Output Current 1.2A
- Multiplexed DIM Analog Dimming
- Multiplexed DIMPWM Dimming
- Up to 97% efficiency
- Adjustable output current control method

3.Application

- Vehicle LED Lights
- LED Stage Lights
- Solar LED Lights
- LED Signal Lights
- LED Street Lights
- MR16/11 Spotlights to Replace Halogen Lamps

4.Chip Block Diagram

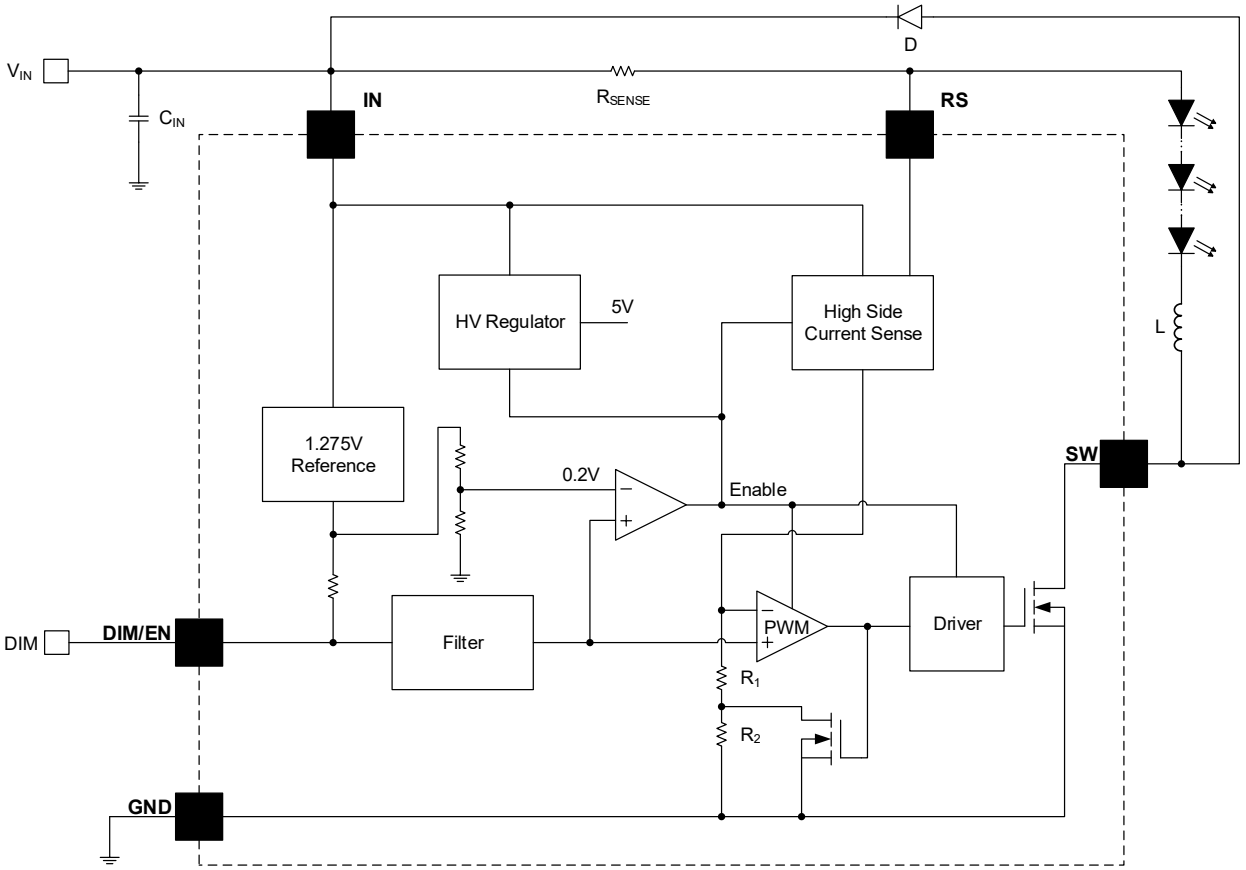

5.Pinning Information

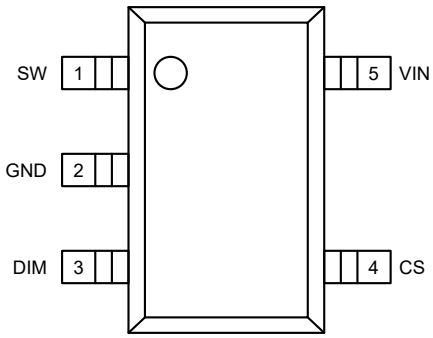

SOT89-5

Lead Definitions

Number	Symbol	Description
1	SW	Drain of Power Switch
2	GND	Signal and Power Ground
3	DIM	Switch Enable, Analog and PWM Dimming Terminals
4	CS	Current Sampling Terminal, Sampling Resistor Connected Between CS and VIN Terminals
5	COME	Power Input, Must Be Connected To a Bypass Capacitor Nearby

6.Absolute Maximum Ratings

Parameter	Rating	Units
Power Supply (VIN) Voltage	-0.3 ~ 30	V
Power Switch Leakage Voltage SW	-0.3 ~ 30	V
Current Sampling Terminal Voltage	-0.3 ~ 30	V
Maximum Power Switch Output Current	1.2	A
Operating Temperature	-40 to 150	°C
Storage Temperature	-55 to 150	°C
ESD: Human Body Mode	>2	kV

7.Electrical Characteristics

Test conditions: VIN=+12V, temperature is 25°C

Parameter	Symbol	Conditions	Min	Typ	Max	Units
Input Characteristics						
Input Voltage	V_{IN}		5		30	V
Undervoltage Protection	VUVLO	VIN decreases		4.7		V
Undervoltage Protection Hysteresis	VUVLO,HYS	VIN increases		100		mV
Current Sampling						
Average Sampling Voltage	VCS	VIN-VCS	97	100	103	mV
Sampling Voltage Hysteresis	VCS_hys			±15		%
CS Pin Input Current	ICS	VIN-VCS=50mV		8		μA
Operating Frequency						
Maximum Operating Frequency	FSW				1	MHz
Turn-off Current						
Turn-off Current	IOFF	VDIM<0.3V		250		μA
DIM Input						
Internal Circuit Operating Voltage	VDIM	DIM Floating		5		V
DIM Input High	VDIM_H		2.5			V
DIM Input Low	VDIM_L				0.3	V
DIM to Internal Operating Voltage Pull-up Resistor	RDIM			420		KΩ
DIM Grounding Leakage Current	I used to be	VDIM=0		12		μA
DIM Dimming						
Analog Dimming Voltage Range	VDIM_DC		0.5		2.5	V
Maximum PWM Dimming Frequency	fDIM	fOSC=500kHz			50	kHz
Low-Frequency PWM Dimming Duty Cycle Range	DPWM_LF	fDIM=100Hz	0.05%		1	
Low-Frequency PWM Dimming Ratio	DPWM_LF			2000:1		
High-Frequency PWM Dimming Duty Cycle Range	HF_DPWM	fDIM=20kHz	10%		1	
High-Frequency PWM Dimming Ratio	HF_DPWM			10:1		

Parameter	Symbol	Conditions	Min	Typ	Max	Units
Power Switch						
SW on-Resistance	RSW			0.45		Ω
SW Continuous Current	ISWmean				1.2	A
SW Leakage Current	ILEAK			0.5	5	μA
Over-Temperature Protection						
Overheat Protection Temperature	TSD			150		°C
Overheat Protection Hysteresis	TSD			20		°C

8.Working Principle

The PT4115M, along with the inductor (L) and current sampling resistor (RS), forms a self-oscillating, continuous inductor current-mode buck constant current LED controller. When VIN is powered on, the initial current in the inductor (L) and current sampling resistor (RS) is zero, and the LED output current is also zero. At this time, the output of the CS comparator is high, the internal power switch is on, and the potential of SW is low. Current flows from VIN to ground through the inductor (L), current sampling resistor (RS), LED, and internal power switch. The slope of the current rise is determined by the voltage drop across VIN, inductor (L), and LED, generating a voltage difference VCS across RS. When (VIN-VCS) > 115mV, the output of the CS comparator goes low, the internal power switch turns off, and the current flows through the inductor (L) and current sampling resistor (RS) at a different slope.

For the LED and Schottky diode (D), when (VIN-VCS) < 85mV, the power switch is reopened, resulting in an average current across the LED of:

$$I_{OUT}=\frac{0.085+0.115}{2 \times R_S}=0.1/R_S$$

The high-side current sampling structure results in a small number of external components. Using a 1% accuracy sampling resistor, the LED output current is controlled within ±3% accuracy.

The PT4115M allows dimming via a PWM signal applied to the DIM pin. A voltage below 0.3V on the DIM pin turns off the LED current, while a voltage above 2.5V fully turns the LED current on. The PWM dimming frequency range is from 100Hz to over 20kHz. Dimming is also possible when the high level is between 0.5V and 2.5V; see the application notes below for specific application details.

The DIM pin can also reduce the LED current (analog dimming) by applying an external DC voltage (VDIM).

Maximum LED

The current is determined by the sampling resistor RS. The effective dimming range of the DC voltage (VDIM) is 0.5V to 2.5V. When the DC voltage (VDIM) is higher than 2.5V, the output LED current remains constant and is set by (0.1/RS)

The LED current can also be adjusted by connecting a resistor between DIM and ground. There is an internal pull-up resistor (typically 420k ohms) connected to the internal regulated voltage of 5V. The voltage at the DIM pin is determined by the voltage divider between theinternal and external resistors.

The DIM pin can float during normal operation. When the voltage applied to DIM is lower than 0.3V, the internal power switch is turned off, and the LED current drops to zero. During the off period, the internal voltage regulator circuit remains in standby mode with a quiescent current of only 250uA. In addition, to ensure reliability, the PT4115 includes an internal over-temperature protection function (TSD).The PT4115 can also connect an external thermistor (NTC) to the vicinity of the LED via the DIM pin to detect the LED temperature and dynamically adjust the LED current to protect the LED. See the application notes below for details.

Application Notes:

(1) The average LED current is set by the external current samplingresistor RS.

The average current of the LED is determined by the resistor RS connected across VIN and CS:

$$I_{OUT}=0.1/R_S\ (R_S>0.12)$$

The above equation holds true only if the DIM pin is floating or the applied voltage to the DIM pin is higher than 2.5V (but must be lower than 5V). In fact, RS sets the maximum output current of the LED, and the actual output current of the LED can be adjusted to any value through the DIM pin.

(2) Analog dimming via DC voltage

ADC voltage (VDIM) can be applied to the DIM terminal to reduce the LED output current. The maximum LED output current is set by (0.1/RS), as shown in the figure below:

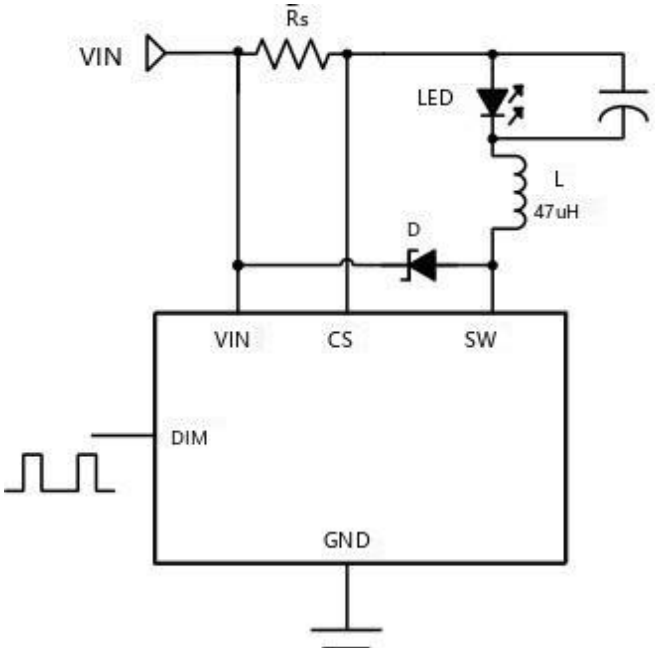

LED average output current calculation formula:

$$I_{OUT}= \frac{0.1 \times (VDIM-0.5)}{2 \times R_S} \quad (0.5V<VDIM<2.5V)$$

For an LED to maintain 100% current within a VDIM range of 2.5V to 5V, the following is true

$$I_{OUT}=0.1/R_S$$

(3) Dimming via PWM signal

The maximum average current of the LED is determined by the resistor RS across VIN and CS. Dimming can be achieved by reducing the output current through a PWM signal with a variable duty cycle added to the DIM pin. The calculation method is shown below:

$$I_{OUT}= \frac{0.1 \times D}{R_S} \quad (0\leq D\leq 100\%,\ 2.5V<Vpulse<5V)$$

If the high level is less than 2.5V, then

$$I_{OUT}= \frac{(V_{pulse}-0.5) \times 0.1 \times D}{2 \times R_S} \quad (0\leq D\leq 100\%,\ 0.5V<Vpulse<2.5V)$$

With PWM dimming, the output current of an LED can vary from 0% to 100%. The brightness of the LED is determined by the duty cycle of the PWM signal. For example, with a 25% duty cycle, the average current of the LED is 25% of (0.1/RS). It is recommended to set the PWM dimming frequency above 120Hz to avoid the human eye being able to see the LED flicker. The advantage of PWM dimming over analog dimming is that it does not change the color of the LED. The PT4115 dimming frequency can reach up to 20kHz.

(4) Off mode

The system is shut down by applying a voltage below 0.3V to the DIM terminal. Under normal circumstances, the quiescent current of the system is 250μA.

(5) Soft start mode

By connecting an external capacitor to the DIM, the voltage at the DIM terminal rises slowly during startup, thus causing the LED current to rise slowly as well, achieving soft start. Typically, the soft start time is approximately 150μs/nF in relation to the external capacitor.

(6) LED open-circuit and short-circuit protection

The PT4115M has output open-circuit protection. If the load is open-circuited, the chip will be set to a safe low-power mode. When the LED is short-circuited, the system enters a low-frequency current-limiting protection safe operating mode.

(7) Bypass capacitor

A low equivalent series resistance (ESR) bypass capacitor must be connected near the power input. A higher ESR results in greater efficiency loss. This bypass capacitor should be able to withstand large peak currents and average the input current, reducing the impact on the power supply. For DC input, the minimum bypass capacitor value is 2.2uF. For AC or low-voltage input, a 220uF tantalum capacitor or similar is required. This bypass capacitor should be placed as close as possible to the chip's input pins. To ensure stability under different temperatures and operating voltages, X5R/X7R capacitors are recommended.

(8) Select inductance

For output currents in the range of 0-1.2A, a 47uH inductor is recommended. The inductor's saturation current must be 30% to 50% higher than the output current.

(9) Select diode

To ensure maximum efficiency and performance, the diode (D) should be a Schottky diode with fast recovery, low forward voltage drop, low parasitic capacitance, and low leakage current. The current capability and voltage rating depend on the specific application, but a 30% margin should be maintained to contribute to stable and reliable operation. It is also important to consider the reverse leakage current above 85 degrees Celsius. Excessive leakage current will increase the system's power dissipation. For AC 12V rectifier diodes (D), a low-voltage-drop Schottky

diode must be selected to reduce its own power dissipation.

(10) Reduce output ripple

If output current ripple needs to be reduced, one of the most effective methods is to connect a capacitor in parallel across the LED.

A 1uF capacitor can reduce output ripple by approximately 1/3. Appropriately increasing the output capacitor can suppress even more ripple. It should be noted that the output capacitor does not affect the system's operating frequency and efficiency, but it will affect the system's startup delay and dimming frequency.

(11) Precautions for heat dissipation

When the operating environment temperature of the system is high and when driving high current loads, attention must be paid to avoiding the system reaching its power limit. The large copper deposition area at the soldering point of the chip pins is beneficial for heat dissipation.

(12) Thermal compensation of load current

High-brightness LEDs sometimes require temperature compensation current to ensure reliable and stable operation. The PT4115 can connect an external thermistor (NTC) or diode (negative temperature coefficient) to the vicinity of the LED via the DIM pin to detect the LED temperature and dynamically adjust the LED current to protect the LED. As the temperature rises, the voltage at the DIM pin

decreases, thereby reducing the LED output current and achieving system temperature compensation.

(13) IC Over-Temperature Protection (TSD)

An internal over-temperature protection function (TSD) is provided to ensure stable and reliable system operation.

(14) PCB Layout Considerations

A reasonable PCB layout is crucial for maximizing system stability and minimizing noise. Using multi-layer PCBs is an effective way to avoid noise interference. To effectively reduce noise in the current loop, the input bypass capacitor should be grounded separately.

(15) SW Terminal

The SW terminal is located at the fast-switching node, so PCB traces should be as short as possible. Additionally, the chip's GND terminal should be grounded as well as possible.

(16) Bypass Capacitor, Inductor, Current Sampling Resistor

In PCB layout, inductors should be kept as far away from the chip as possible to reduce inductor radiation. If the PCB allows, use as much copper as possible and connect it to the power supply's GND or Vcc to absorb interference generated by the inductor. Another crucial point is to minimize the parasitic inductance caused by traces at both ends of the RS terminal to ensure sampling accuracy. Bypass capacitors should be placed as close to the chip as possible, and their traces should be short and thick.

Typical curves: (Tested with an inductance of 47uH, TA=25°C)

(1) Relationship between 1W LED output current and input voltage:

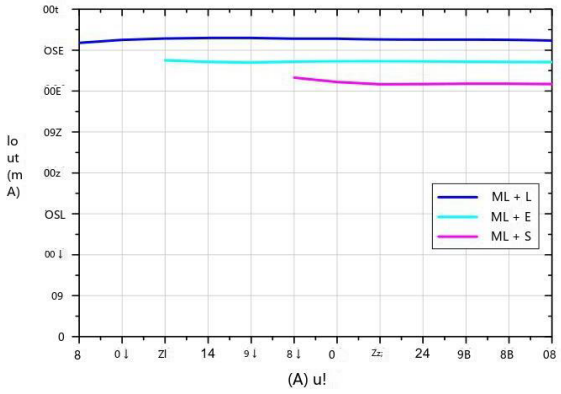

(2) Relationship between the rate of change of output current of 1W LED lamp system and input voltage:

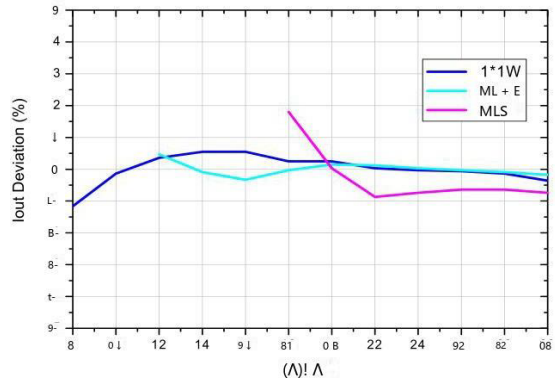

(3) Relationship between the efficiency of 1W LED lamp system and input voltage:

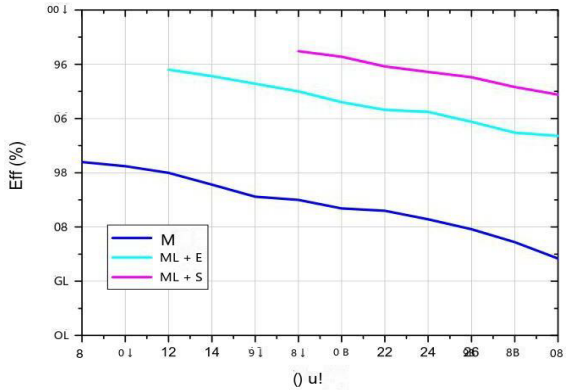

(4) Relationship between output current and input voltage of 3W LED lamp:

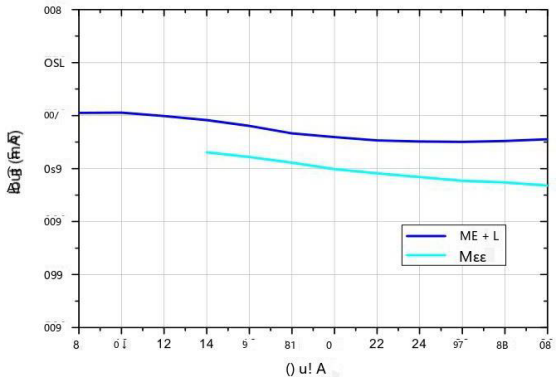

(5) Relationship between output current change rate and input voltage of 3W LED lamp:

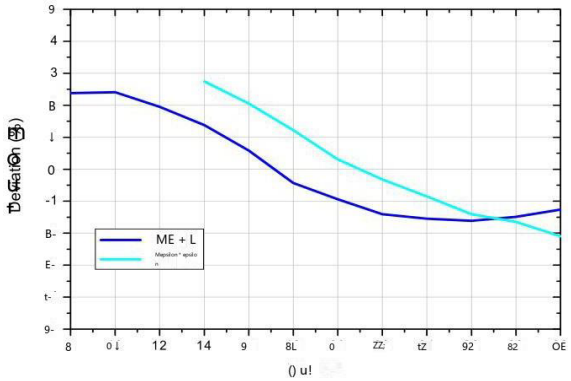

(6) Relationship between system efficiency and input voltage of 3W LED lamp:

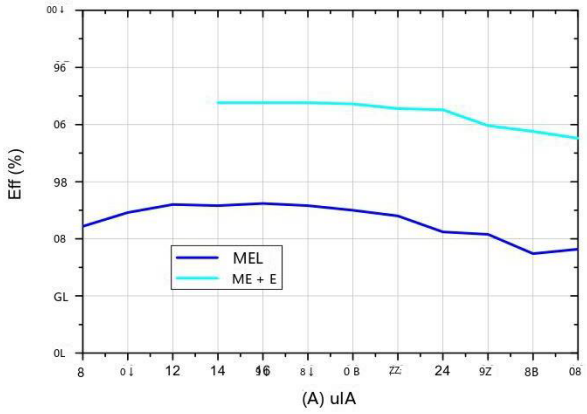

(7) Simulate dimming curve:

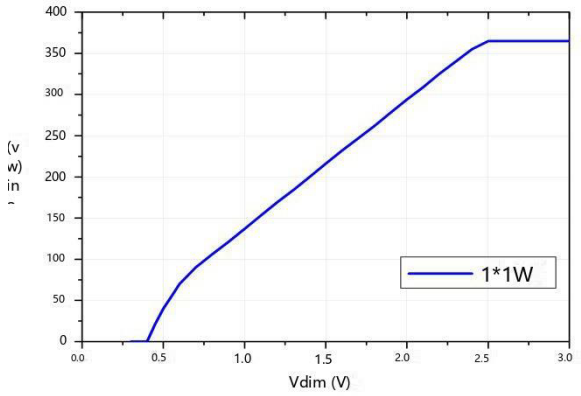

(8) PWM dimming curve (10% duty cycle, 50% duty cycle, 90% duty cycle, 200Hz):

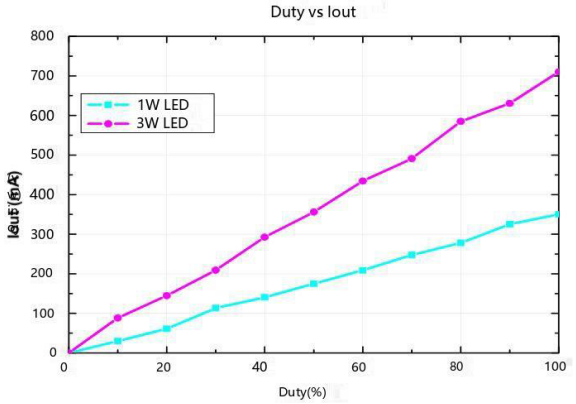

(9) Relationship between Vcs and ambient temperature:

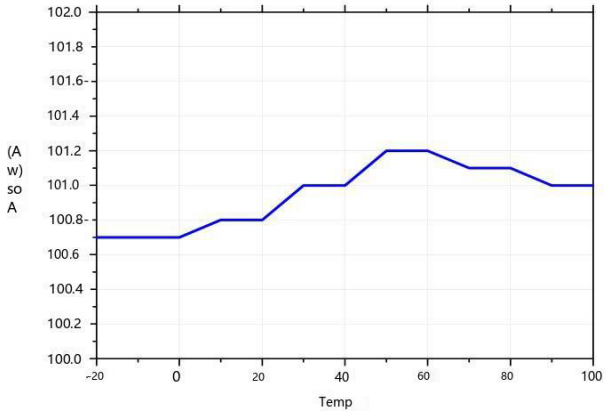

9.Typical Application Circuit

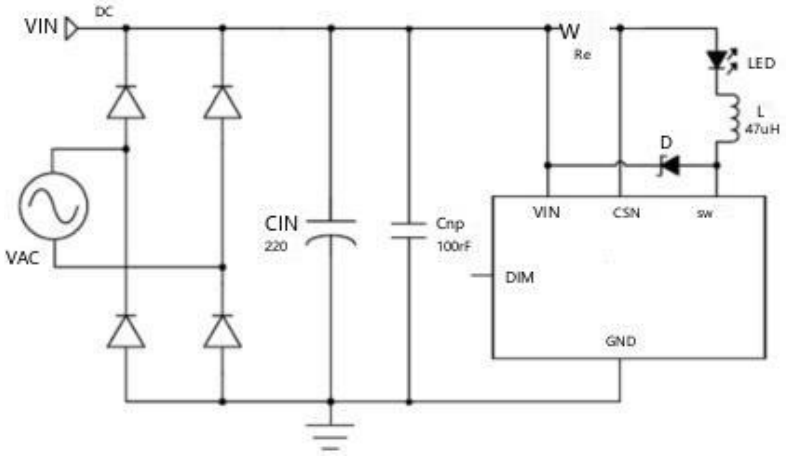

10.SOT89-5 Package Outline Dimensions

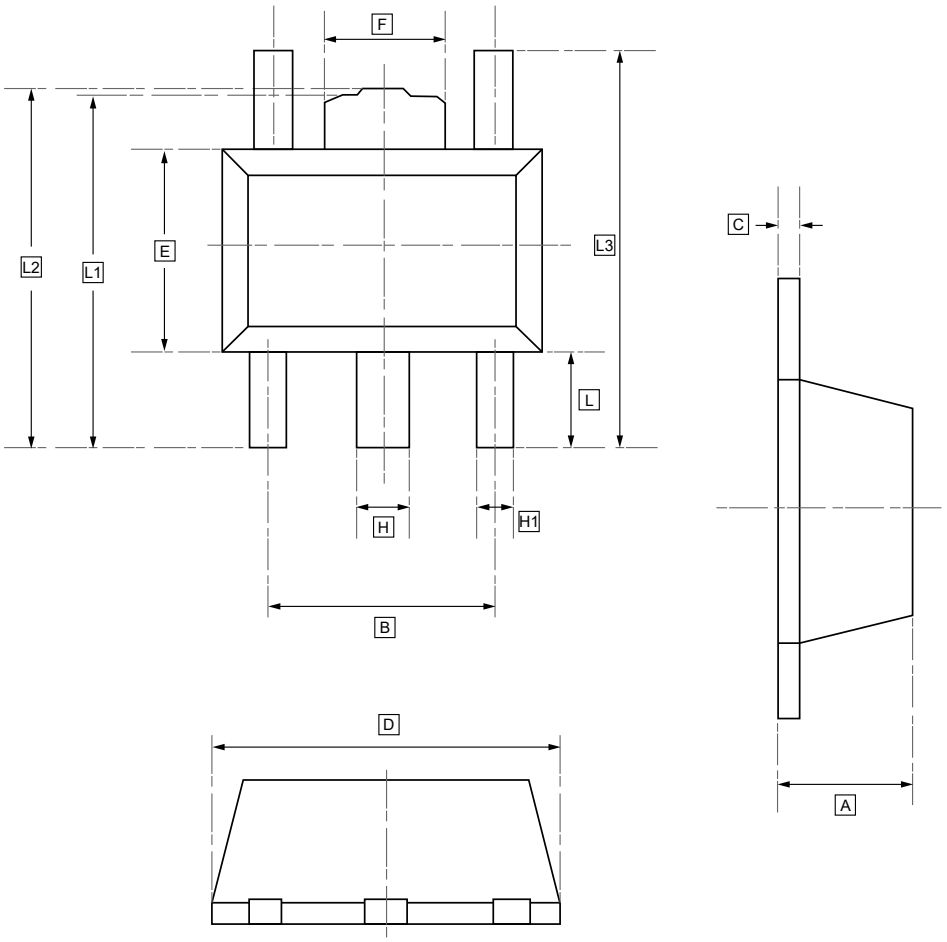

DIMENSIONS (mm are the original dimensions)

Symbol	A	B	C	D	E	F	H	H1	L	L1	L2	L3
Min	1.450	2.950	0.330	4.450	2.450	1.650	0.450	0.370	0.900	4.100	4.100	4.350
Max	1.550	3.050	0.430	4.550	2.550	1.750	0.580	0.480	1.000	4.300	4.350	4.450

11.Ordering Information

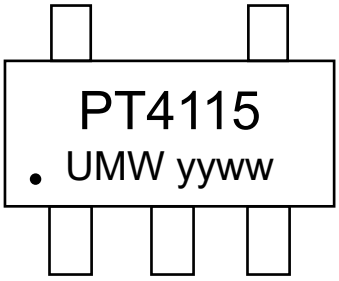

yy: Year Code
ww: Week Code

Order Code	Package	Base QTY	Delivery Mode
UMW PT4115M	SOT89-5	1000	Tape and reel

12.Disclaimer

UMW reserves the right to make changes to all products, specifications. Customers should obtain the latest version of product documentation and verify the completeness and currency of the information before placing an order.

When applying our products, please do not exceed the maximum rated values, as this may affect the reliability of the entire system. Under certain conditions, any semiconductor product may experience faults or failures. Buyers are responsible for adhering to safety standards and implementing safety measures during system design, prototyping, and manufacturing when using our products to prevent potential failure risks that could lead to personal injury or property damage.

Unless explicitly stated in writing, UMW products are not intended for use in medical, life-saving, or life-sustaining applications, nor for any other applications where product failure could result in personal injury or death. If customers use or sell the product for such applications without explicit authorization, they assume all associated risks.

When reselling, applying, or exporting, please comply with export control laws and regulations of China, the United States, the United Kingdom, the European Union, and other relevant countries, regions, and international organizations.

This document and any actions by UMW do not grant any intellectual property rights, whether express or implied, by estoppel or otherwise. The product names and marks mentioned herein may be trademarks of their respective owners.