TECH PUBLIC
台舟电子

SN74LVC06ADR-TP

Hex inverter with open-drain outputs

WWW.TECHPUBLIC.COM

Features

- Wide supply voltage range from 1.65 V to 3.6 V
- CMOS low power dissipation
- High noise immunity
- Latch-up performance exceeds 250 mA
- CMOS level
- ESD protection:
  HBM ANSI/ESDA/JEDEC JS-00
  Class 3A exceeds 6000 V
  CDM ANSI/ESDA/JEDEC JS-002
  Class C3 exceeds 2000 V
- I_{OFF} circuitry provides partial Power-down mode operation
- Complies with JEDEC standard:
  JESD8-7 (1.65 V to 1.95 V)
  JESD8-5 (2.3 V to 2.7 V)
  JESD8C (2.7 V to 3.6 V)
- Packaging: SOP-14

General Description

These hex inverter buffers/drivers are designed for 1.65-V to 3.6-V VCC operation.
The outputs of the devices are open drain and can be connected to other open-drain outputs to implement active-low wired-OR or active-high wired-AND functions. The maximum sink current is 24 mA.
Inputs can be driven from either 3.3-V or 5-V devices. This feature allows the use of these devices as translators in a mixed 3.3-V/5-V system environment.

PIN CONFIGURATIONS (Top view)

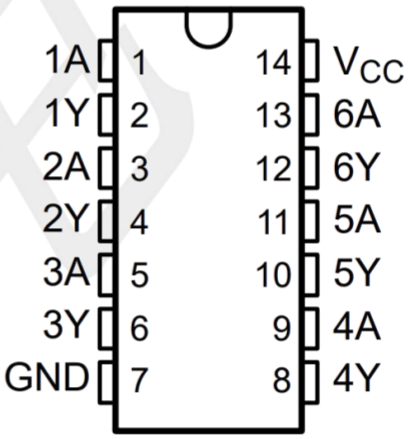

SOP-14

PIN DESCRIPTION

PIN NO.	PIN NAME	DESCRIPTION	PIN NO.	PIN NAME	DESCRIPTION
1	1A	Data input	8	4Y	Data output
2	1Y	Data output	9	4A	Data input
3	2A	Data input	10	5Y	Data output
4	2Y	Data output	11	5A	Data input
5	3A	Data input	12	6Y	Data output
6	3Y	Data output	13	6A	Data input
7	GND	ground (0 V)	14	V_{CC}	supply voltage

Functional diagram

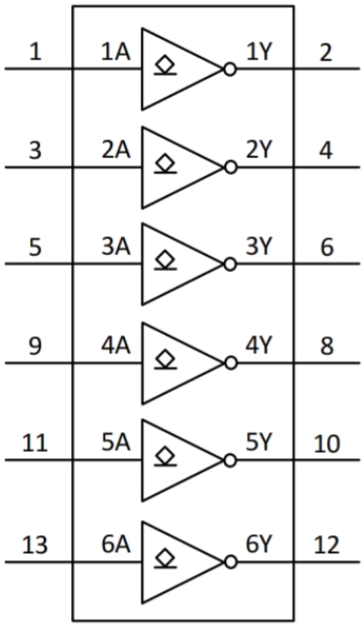

Fig. 1. Logic symbol

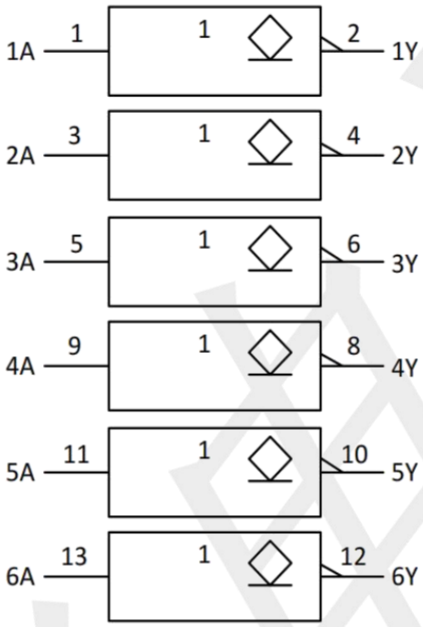

Fig. 2. IEC logic symbol

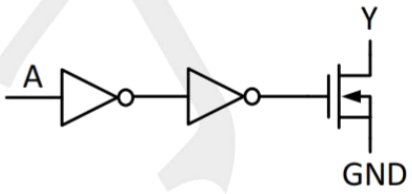

Fig. 3. Logic diagram (one gate)

Functional Description

Function table

Input nA	Output nY
L	Z
H	L

H = HIGH voltage level; L = LOW voltage level; Z = high-impedance OFF-state.

ABSOLUTE MAXIMUM RATINGS

In accordance with the Absolute Maximum Rating System. Voltages are referenced to GND.

Symbol	Parameter	Conditions	Min	Max	Unit
V_{CC}	supply voltage		-0.5	6.5	V
I_{IK}	input clamping current	$V_I < 0$ V	-50	--	mA
V_I	input voltage	(1)	-0.5	6.5	V
I_{OK}	output clamping current	$V_O < 0$ V	-50	--	mA
V_O	output voltage	Active mode (1)	0	V_{CC} + 0.5	V
		Power-down mode; V_{CC} = 0 V (1)	0	6.5	V
I_O	output current	V_O = 0 V to V_{CC}	--	50	mA
I_{CC}	supply current		--	100	mA
I_{GND}	ground current		-100	--	mA
P_{tot}	total power dissipation	T_{amb} = -40 °C to + 125 °C	--	500	mW
T_{stg}	storage temperature		-65	150	°C

Note:1. The input and output voltage ratings may be exceeded if the input and output current ratings are observed.

Recommended operating conditions

Symbol	Parameter	Conditions	Min	Max	Unit
V_{CC}	supply voltage		1.65	3.6	V
		functional	1.5	--	V
V_I	input voltage		0	3.6	V
V_O	output voltage	Active mode	0	V_{CC}	V
		Power-down mode; V_{CC} = 0 V	0	3.6	V
T_{amb}	ambient temperature		-40	125	°C
$\Delta t/\Delta V$	input transition rise and fall rate	V_{CC} = 1.65 V to 2.7 V	0	20	ns/V
		V_{CC} = 2.7 V to 5.5 V	0	10	ns/V

Static characteristics

(Voltages are referenced to GND (ground=0V), unless otherwise specified.)

Symbol	Parameter	Conditions	-40 °C to +85 °C			-40 °C to +125 °C		Unit
			Min	Typ	Max	Min	Max	
V_{IH}	HIGH-level input voltage	V_{CC} = 1.2 V	1.08	--	--	1.08	--	V
		V_{CC} = 1.65 V to 1.95 V	0.65V_{CC}	--	--	0.65V_{CC}	--	V
		V_{CC} = 2.3 V to 2.7 V	1.7	--	--	1.7	--	V
		V_{CC} = 2.7 V to 3.6 V	2.0	--	--	2.0	--	V
V_{IL}	LOW-level input voltage	V_{CC} = 1.2 V	--	--	0.12	--	0.12	V
		V_{CC} = 1.65 V to 1.95 V	--	--	0.35V_{CC}	--	0.35V_{CC}	V
		V_{CC} = 2.3 V to 2.7 V	--	--	0.7	--	0.7	V
		V_{CC} = 2.7 V to 3.6 V	--	--	0.8	--	0.8	V
V_{OL}	LOW-level output voltage	V_I = V_{IH} or V_{IL}						
		I_O = 100 µA; V_{CC} = 1.65 V to 5.5 V	--	--	0.10	--	0.10	V
		I_O = 4 mA; V_{CC} = 1.65 V	--	--	0.45	--	0.65	V
		I_O = 8 mA; V_{CC} = 2.3 V	--	--	0.30	--	0.45	V
		I_O = 12 mA; V_{CC} = 2.7 V	--	--	0.40	--	0.60	V
		I_O = 24 mA; V_{CC} = 3.0 V	--	--	0.55	--	0.80	V
I_I	input leakage current	V_I = 3.6 V or GND ; V_{CC} = 0 V to 3.6 V	--	±0.1	±5	--	±20	µA

Static characteristics

(Voltages are referenced to GND (ground=0V), unless otherwise specified.)

Symbol	Parameter	Conditions	-40 °C to +85 °C			-40 °C to +125 °C		Unit
			Min	Typ	Max	Min	Max	
I_{OFF}	power-off leakage current	V_{CC} = 0 V; V_I or V_O = 3.6 V	--	±0.1	±10	--	±20	μA
I_{CC}	supply current	V_{CC} = 1.65 V to 3.6 V ; V_I = V_{CC} or GND ; I_O = 0 A ;	--	0.01	10	--	40	μA
ΔI_{CC}	additional supply current	per input pin ; V_{CC} = 2.3 V to 3.6 V ; V_I = V_{CC} - 0.6 V ; I_O = 0 A	--	0.2	500	--	5000	μA
C_I	input capacitance	V_{CC} = 3.3 V ; V_I = GND to V_{CC}	--	4	--	--	--	pF

Note:All typical values are measured at V_{CC} = 3.3V and T_{amb} = 25 °C.

Dynamic Characteristics

Voltages are referenced to GND (ground = 0 V); for test circuit see

Symbol	Parameter	Conditions	-40 °C to +85 °C			-40 °C to +125 °C		Unit
			Min	Typ	Max	Min	Max	
t_{pd}	propagation delay	nA to nY;						
		V_{CC} = 1.2 V	--	28.3	--	--	--	ns
		V_{CC} = 1.65 V to 1.95 V	3.5	8.5	16.5	3.5	17	ns
		V_{CC} = 2.3 V to 2.7 V	2.0	4.8	8.0	2.0	9.0	ns
		V_{CC} = 3.0 V to 3.6 V	1.5	3.5	5.5	1.5	6.0	ns
$t_{sk(o)}$	output skew time	V_{CC} = 3.0 V to 3.6 V	--	--	1.0	--	1.5	ns
C_{PD}	power dissipation capacitance	per gate ; V_I = GND to V_{CC}						
		V_{CC} = 1.65 V to 1.95 V	--	3.3	--	--	--	pF
		V_{CC} = 2.3 V to 2.7 V	--	3.4	--	--	--	pF
		V_{CC} = 3.0 V to 3.6 V	--	3.9	--	--	--	pF

Note:Typical values are measured at T_{amb} = 25 °C and V_{CC} = 1.5 V, 1.8 V, 2.5 V, 3.3 V and 3.6 V respectively.

Waveforms and test circuit

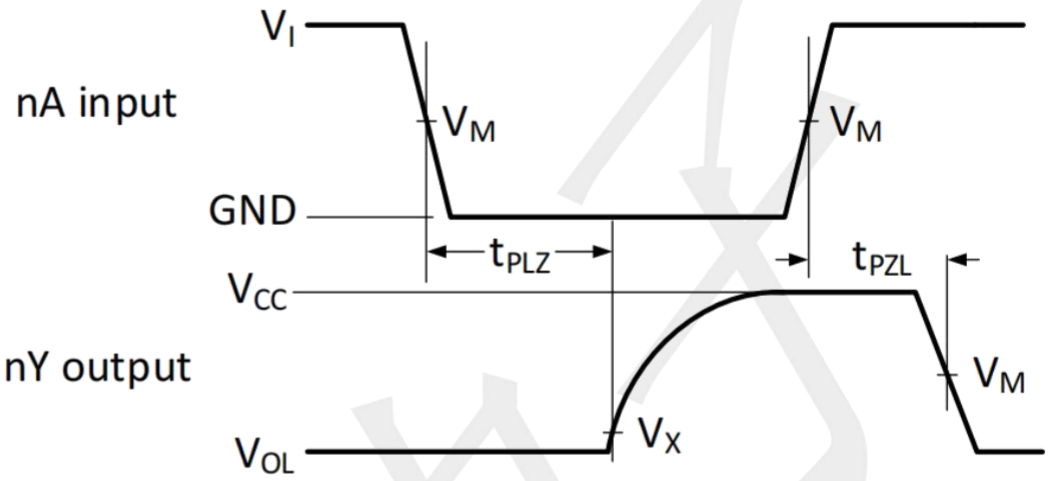

Measurement points are given in Table 8.
V_{OL} and V_{OH} are typical output voltage levels that occur with the output load.

The input nA to output nY propagation delays

Measurement points

Supply voltage	Input	Output	
V_{CC}	V_M	V_X	V_M
1.2 V	0.5V_{CC}	V_{OL} + 0.15 V	0.5V_{CC}
1.65 V to 1.95 V	0.5V_{CC}	V_{OL} + 0.15 V	0.5V_{CC}
2.3 V to 2.7 V	0.5V_{CC}	V_{OL} + 0.15 V	0.5V_{CC}
3.0 V to 3.6 V	1.5 V	V_{OL} + 0.3 V	1.5 V

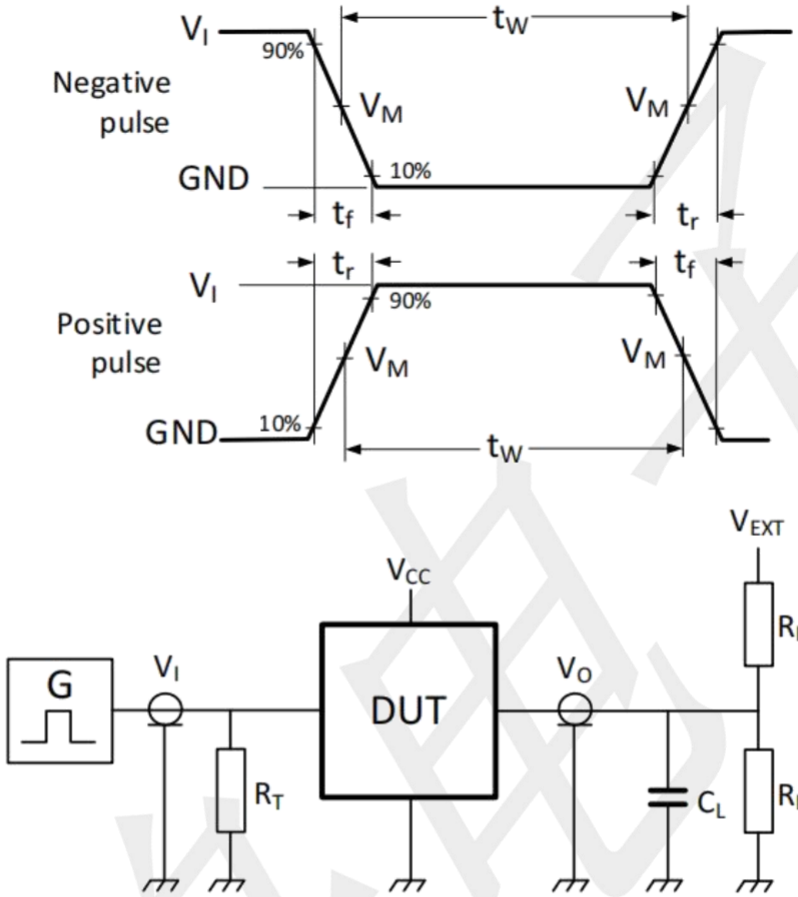

Test data is given in Table 9.
Definitions for test circuit:
R_L = Load resistance.
C_L = Load capacitance including jig and probe capacitance.
R_T = Termination resistance should be equal to the output impedance Z_o of the pulse generator.
V_{EXT} = External voltage for measuring switching times.

Test data

Supply voltage	Input		Load		V_{EXT}
V_{CC}	V_I	$t_r = t_f$	C_L	R_L	t_{PLZ}, t_{PZL}
1.2V	V_{CC}	≤ 2.0 ns	15 pF	500 Ω	2 x V_{CC}
1.65 V to 1.95 V	V_{CC}	≤ 2.0 ns	15 pF	500 Ω	2 x V_{CC}
2.3 V to 2.7 V	V_{CC}	≤ 2.0 ns	15 pF	500 Ω	2 x V_{CC}
3.0 V to 3.6 V	3 V	≤ 2.0 ns	15 pF	500 Ω	6.0 V

Package information SOP-14

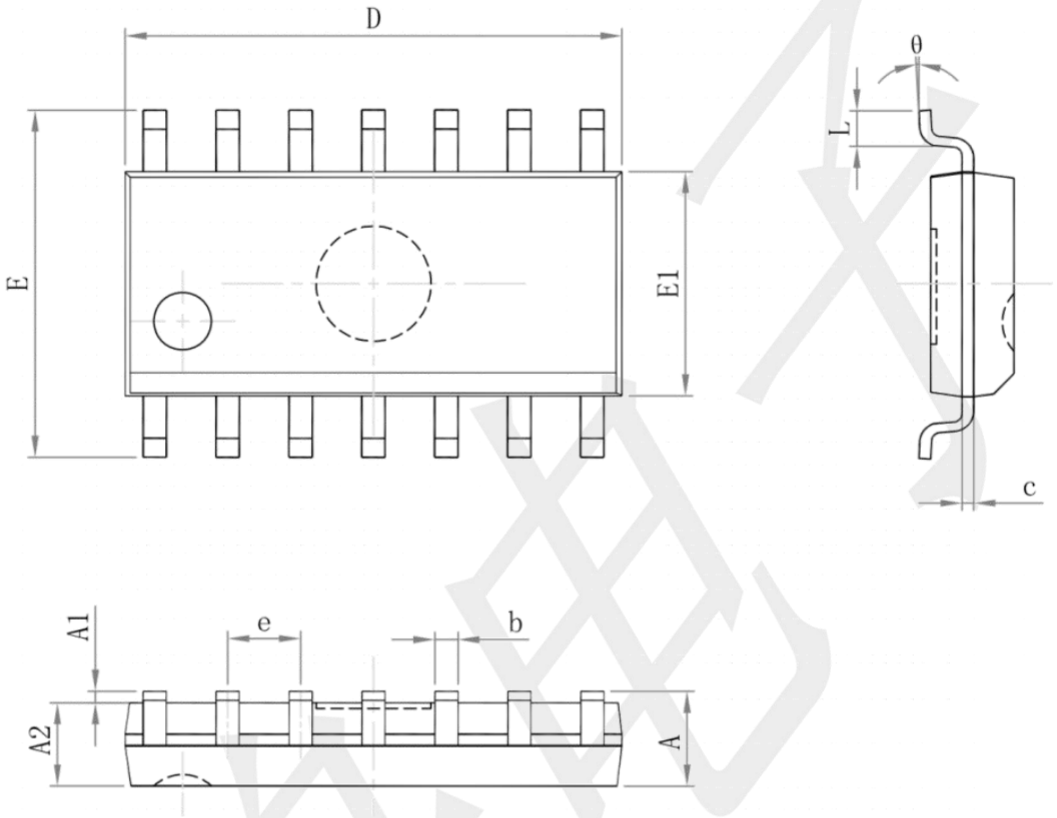

Symbol	Dimensions In Millimeters		Dimensions In Inches	
	Min	Max	Min	Max
A	——	1.750	——	0.069
A1	0.100	0.250	0.004	0.010
A2	1.250	——	0.049	——
b	0.310	0.510	0.012	0.020
c	0.100	0.250	0.004	0.010
D	8.450	8.850	0.333	0.348
E	5.800	6.200	0.228	0.244
E1	3.800	4.000	0.150	0.157
e	1.270(BSC)		0.050(BSC)	
L	0.400	1.270	0.016	0.050
θ	0°	8°	0°	8°