福声科技
FUSHENG TECHNOLOGY

ROHS

SPECIFICATION OF PRODUCT

承 认 书

CUSTOMER: _____

DESCRIPTION: Piezo Buzzer

FUSHENG P/N: FSR-4514

CUSTOMER P/N: _____

DATE: 2024-12-9

CUSTOMER	APPROVER	CHECKER
	Wang	Bing Yan

泰州福声电子科技有限公司

地址:江苏省泰州市海陵区凤凰西路 98 号

电话：0086-523-86219066 传真：0086-523-81601108

邮箱: fs.wu@electronic-tech.cn

网址：www.tzfsdz.com

1.SPECIFICATION 规格

No.	Item	Unit	Specification		Condition
1	Oscillation Frequency	Hz	2200-4000		
2	Operating Voltage MAX	Vp-p	Sine Wave 85Vp-p	Square Wave 50Vp-p	Continuous 连续
3	Operating Voltage MAX	Vp-p	Sine Wave 100Vp-p	Square Wave 60Vp-p	Intermittent 间歇
4	Sound Pressure Level	dB	MIN. 100		at 30cm/12Vp-p, Sine wave,3.0KHZ
5	Electrostatic Capacity	nF	140±30%		at 120Hz 1V
6	Operating Temperature	℃	-40 ~ +105		
7	Storage Temperature	℃	-40 ~ +105		
8	Dimension	mm	45 x H 13.7		See appearance drawing
9	Weight (MAX)	gram	11.5		
10	Housing Material		NYLON PA46		
11	Terminal		Pin type Red Copper (DSN)		
12	Environmental Protection Regulation 环保法规		RoHS2.0		See appearance drawing

2. APPEARANCE DRAWING 尺寸图

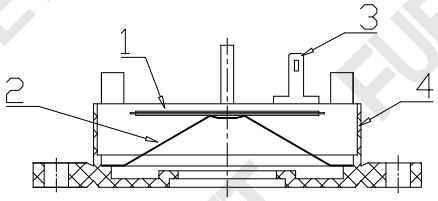

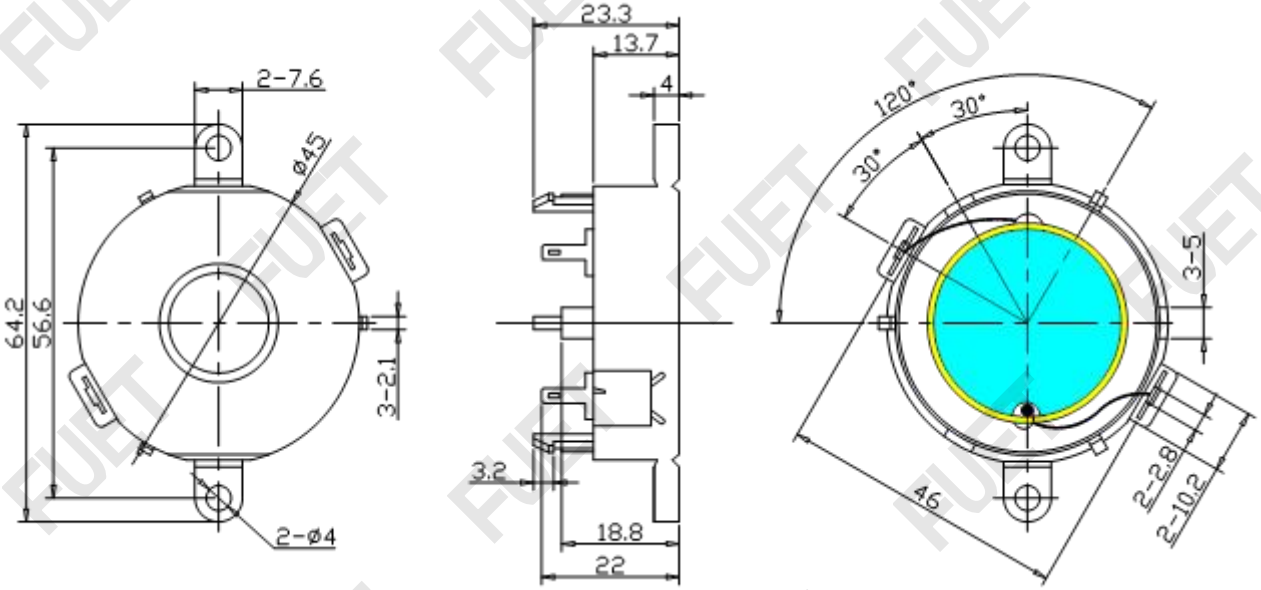

Tol : ± 0.5 Unit: mm

3.TESTING METHOD 测量方式

Standard Measurement conditions

Temperature:25±2℃ Humidity:45-65%

Acoustic Characteristics:

The oscillation frequency, current consumption and sound pressure are measured by the measuring instruments shown below.

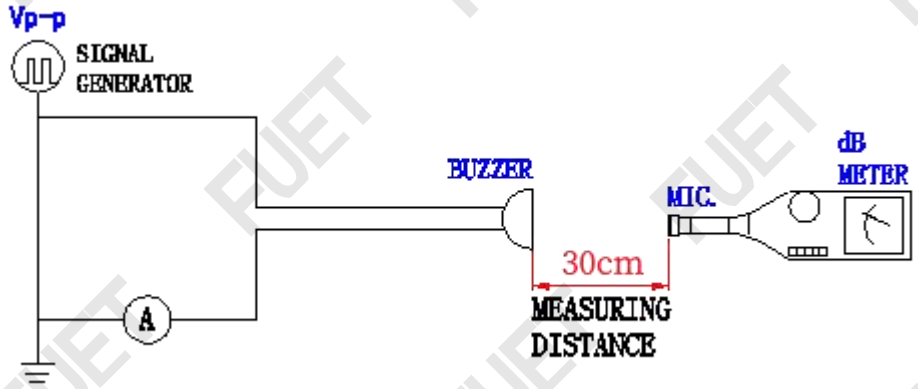

In the measuring test, buzzer is placed as follows:

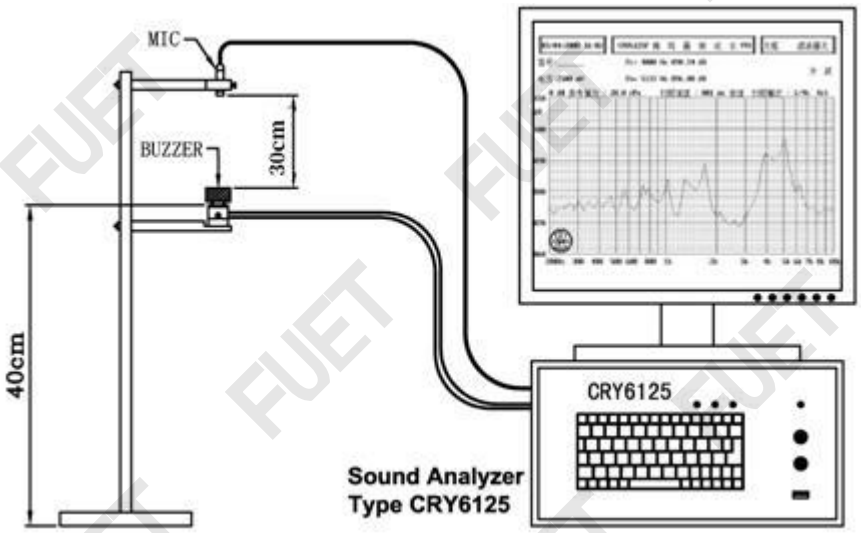

4. Typical Frequency Response Curve

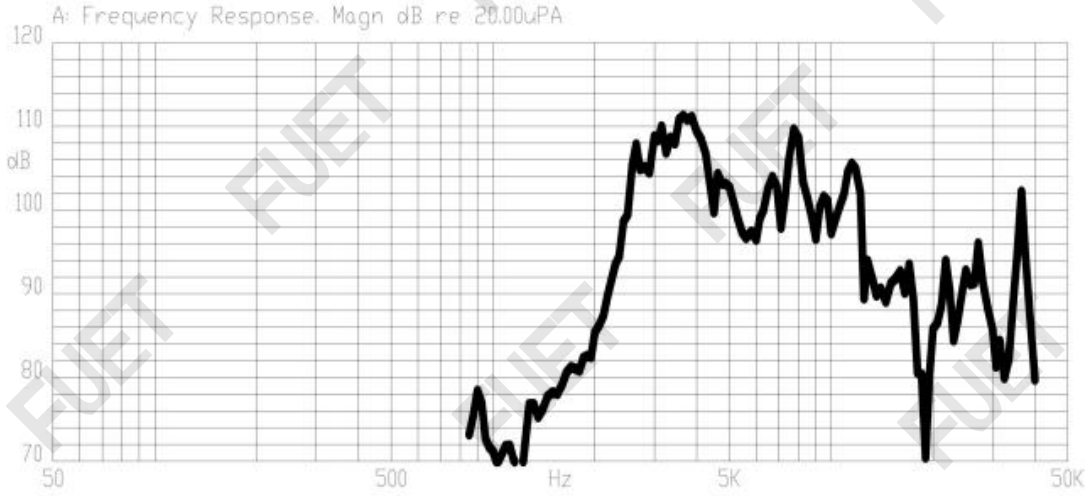

5. RELIABILITY TEST

NO.	ITEM	TEST CONDITION AND REQUIREMENT
1	High Temperature Test (Storage)	After being placed in a chamber with 105 2ºC for 96 hours and then being placed in normal condition for 2 hours. Allowable variation of SPL after test: 10dB.
2	Low Temperature Test (Storage)	After being Placed in a chamber with -40 2ºC for 96 hours and then being placed in normal condition for 2 hours. Allowable variation of SPL after test: 10dB.
3	Humidity Test	After being Placed in a chamber with 90-95% R.H. at 40 2ºC for 96 hours and then being placed in normal condition for 2 hours. Allowable variation of SPL after test: 10dB.
4	Temperature Cycle Test	The part shall be subjected to 5 cycles. One cycle shall be consist of: 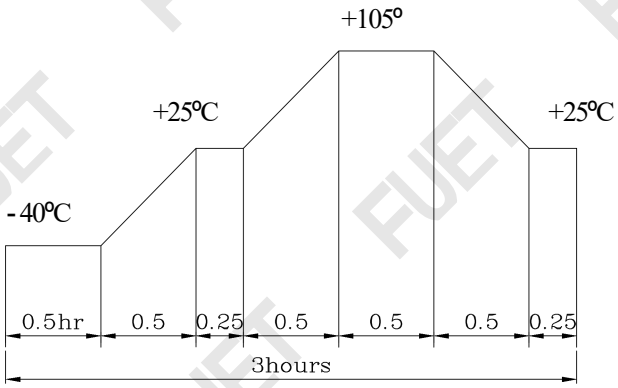 Allowable variation of SPL after test: 10dB.
5	Drop Test	Drop on a hard wood board of 4cm thick, any directions ,6 times, at the height of 75cm . Allowable variation of SPL after test: 10dB.
6	Vibration Test	After being applied vibration of amplitude of 1.5mm with 10 to 55 Hz band of vibration frequency to each of 3 perpendicular directions for 2 hours . Allowable variation of SPL after test: 10dB.

7	Solderability Test	Lead terminals are immersed in rosin for 5 seconds and then immersed in solder bath of +260 5℃ for 3 1 seconds . 90% min. lead terminals shall be wet with solder (Except the edge of terminals).
8	Terminal Strength Pulling Test	The force of 9.8N(1.0kg) is applied to each terminal in axial direction for 10 seconds. No visible damage and cutting off.

TEST CONDITION.

Standard Test Condition	:	a) Temperature : +5～+35℃	b) Humidity : 45-85%	c) Pressure : 860-1060mbar
一般测试条件	:	a) 温度 : +5～+35℃	b) 湿度 : 45-85%	c) 气压 : 860-1060mbar
Judgment Test Condition	:	a) Temperature : +25±2℃	b) Humidity : 60-70%	c) Pressure : 860-1060mbar
争议时测试条件	:	a) 温度 : +25±2℃	b) 湿度 : 60-70%	c) 气压 : 860-1060mbar

6.PACKING

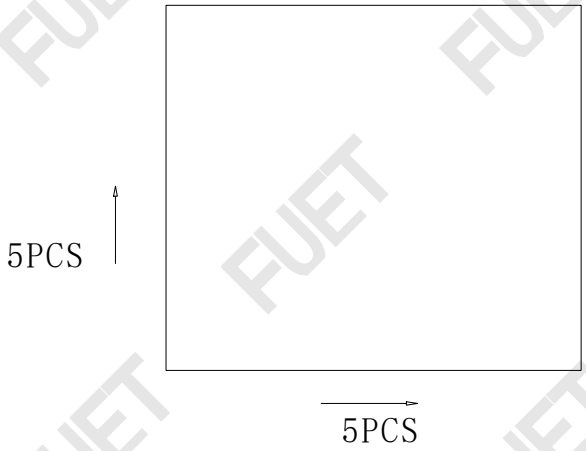

一层纸板加泡沫板，纸板尺寸：300*300*2mm,
泡沫板尺寸：300*300*8mm,
5×5PCS=25PCS/box 每泡沫板插5×5=25只
每板套塑料袋350*400mm

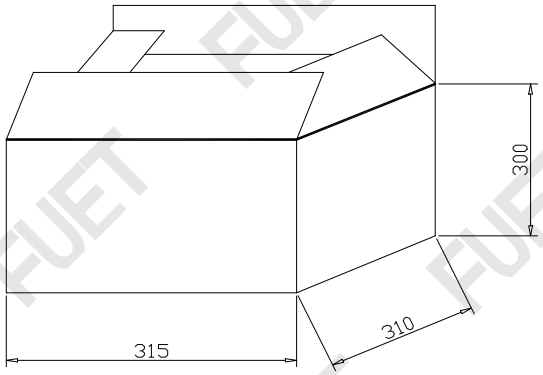

250PCS/CTN 每箱放250只