

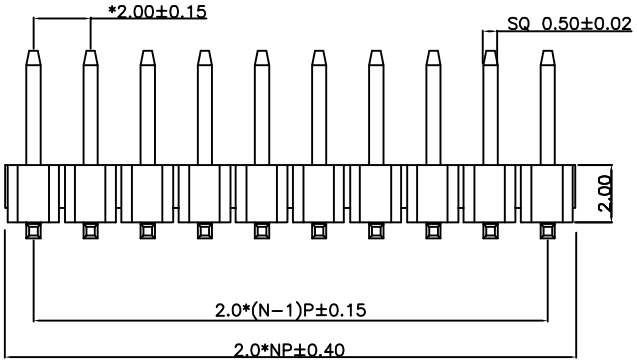

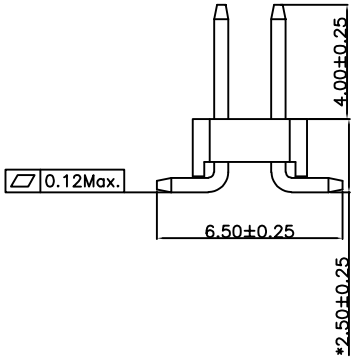

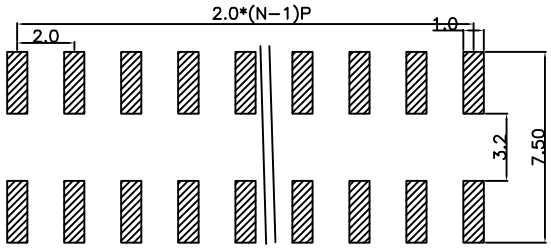

Notes：
Rated current:2.0A
Withstand Voltage:500V AC/DC
Contact Resistance:20mΩ Max
Insulation Resistance:1000MΩ Min
Operating Temperature:-40℃ TO +105℃
Contact Material:Brass
Plating:G/F
Insulator Material: PA6T UL94V-0 BK

———		new		2015/5/3		A	瀚源
ECN BO.		DESCRIPTION.		DATE.		REV.	
DESIGNED	CHECKED	APPROVAL	DRAWING NUMBER			SCALT: 1/2	SCALE: 3:1
Mikey	Tom	Jerry	PART NAME	2005WVS-2xXXP	UNLESS OTHERWISE SPECIFIED,TOLERANCE:		X. ±0.25 X.x ±0.20 X.xx ±0.15 ANGULAR ±3°
			MODEL NAME	2005WVS-2xXXP			
			3RD ANGLE PROJ	HanElectricity Co.,LTD			FILE.NO.