SPECIFICATION FOR APPROVAL

规　　格　　书

Customer (客户名称)：

Customer P/N(客户编号)：

Our P/N (本厂编号)：　FS3820NSW-H6.5-R01

Approval Date(日期)：　2026.10.16

Environment Request(环境标准)：

☐ Non-RoHS (非 RoHS 标准)　■ RoHS (RoHS 标准)

☐REACH (REACH 标准)　☐ Others (其他)

CUSTOMER'S APPROVED SIGNATURE		

福声科技 FUSHENG TECHNOLOGY

泰州福声电子科技有限公司

Taizhou Fusheng Electronic Technology Co.,Ltd.

Adds: No.98 of FengHuang Road West,Hailing District ,Taizhou .

地址：江苏省泰州市海陵区凤凰西路98号

Tel: +86-523-86219066　Fax: +86-523- 81601108

Http://www.tzfsdz.com　E-mail: fs.wu@electronic-tech.cn

	DESINGER	CHECKED	APPROVED
SIGNATURE			
DATE			

Alteration History

变更历史

Note 序号	Date 日 期	Detail changes 变　更　内　容	Reason 变更理由	Revision 变更表示

Speaker Specification

Part No.	Customer No 客户型号		Customer code 客户编号	
	Our Part No 本厂编号	FS3820NSW-H6.5-R01	Revision 版本	A

No.	Item 项目	Specification 规格	Testing Condition 测试条件
1.	Rated Imp 共称阻抗	AC:4 ohm±15% DC:3.5Ω±15%	At 2KHz, 4.5Vrms
2.	Resonance Freq 最低共振周波数	Fo：450 60Hz	4.5V/while testing in 10CC box
3.	Output S.P.L. 出力音压	88±3dB	4.5V/0.5m at 500Hz 10CC in a baffle
4.	Rated Power 额定功率	at 3W	at3.5Vrms while testing in 10CC box
5.	Max Power 最大功率	at 5W	at4.5Vrms while testing in 10CC box
6.	Frequency Range 实效频宽	200~10kHz	Output SPL-10dB
7.	Operation 可靠性试验	Must Be Normal at Rated Frequency Range	Power:3w，in 10cc box Time:96 hrs.
8.	Buzzes & Rattles 异常音试验	Must be free audible noise (buzzes and rattles) 无异常声	200Hz 3400Hz frequency range, input level up to 4.5Vrms while testing in 10CC box
9.	T H D 失真	4% Max	Mounted in 10CC measure box and in a baffle .Test at 4.5Vrms/5cm
10.	Magnet 磁铁	Nd Fe B	
11.	Operating Temperature 动作温度	-20℃ ~ +70℃	
12.	Storage Temperature 储存温度	-40℃ ~ +80℃	
13.	Waterproof Level 防水等级	IP68	
14.	Weight 重量	11.7g	

15.	Cold Test 耐寒试验	Must be normal after having been in a test chamber for 96 hours at the condition of-40℃±3℃ and then left 2 hours in a room. (-40℃±3℃,96 小时试验室，常温 2 小时后,无异常的不良))
16.	Heat Test 耐热试验	Must be normal after having been in a test chamber for 96 hours at the condition of+80℃±3℃ and then left 2 hours in a room. (+80℃±3℃ 96 小时试验，常温 2 小时后,无异常的不良)
17.	Short Term Max Power test 瞬间最大功率试验	Power: 5w 1 sec. on, 1 min. off, for a total of 60 cycles. (在10cc音腔内输入5W信号连续1分钟工作，无永久性损伤)
18.	Polarity 极性	When a positive D.C voltage is applied to the terminal Marked(+)or red, the diaphragm should move to the front (红线为正极,黑线为负极)
19.	DROP TEST 跌落试验	1. The speaker shall be mounted in a fixed installation. 2. Samples should be dropped from 1m high, 3 times in each direction. 3. Test should be repeated a total of 15 times. (从 1.0m 的高度跌落 3 次,无异常不良)

Temperature Cycle Test

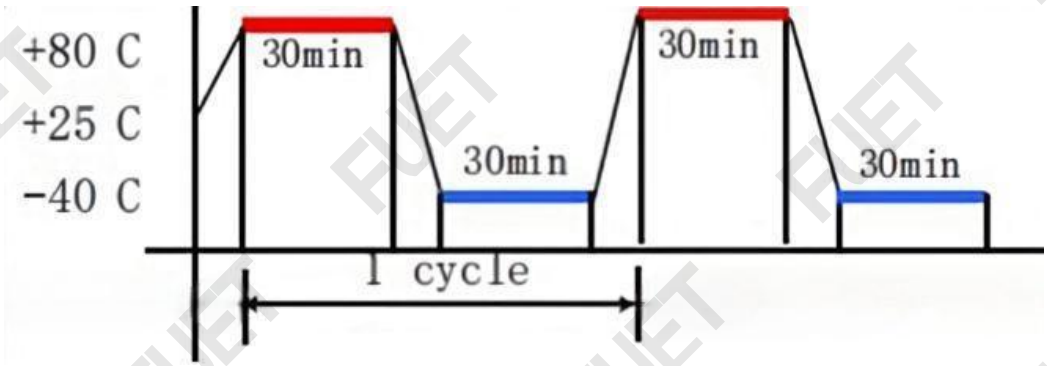

Frequency Response

EFFICIENCY 90 3dB (0dB=20.0μPa) at 500Hz

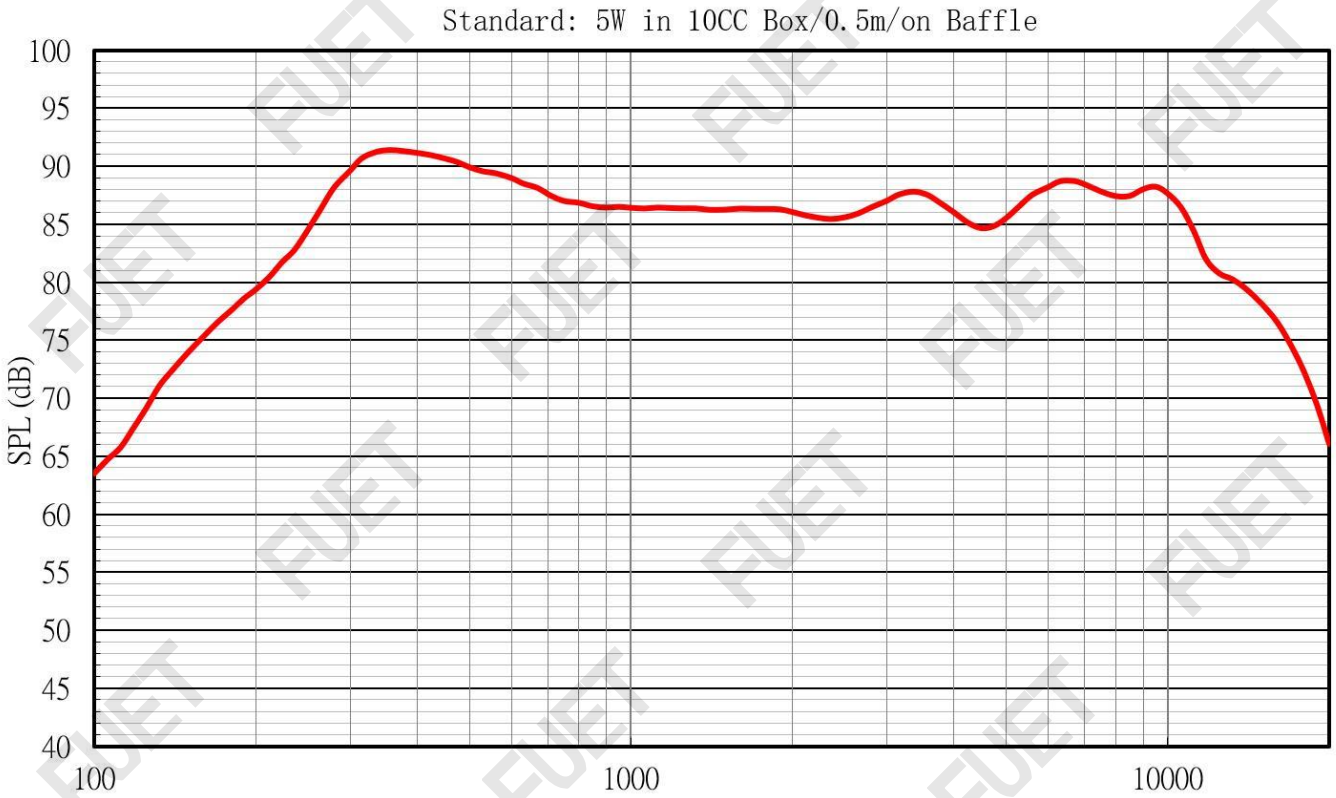

Limit Data for THD

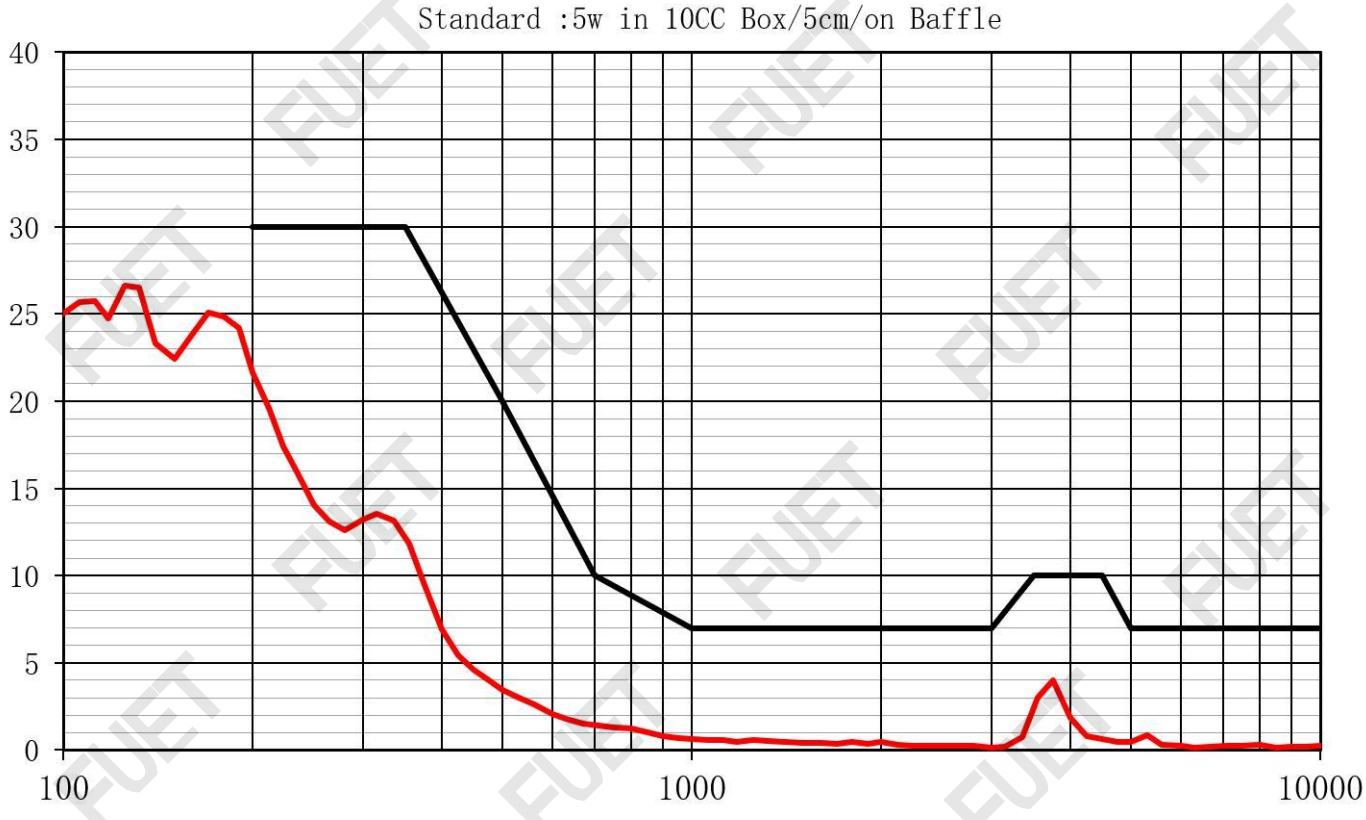

Product Outside View

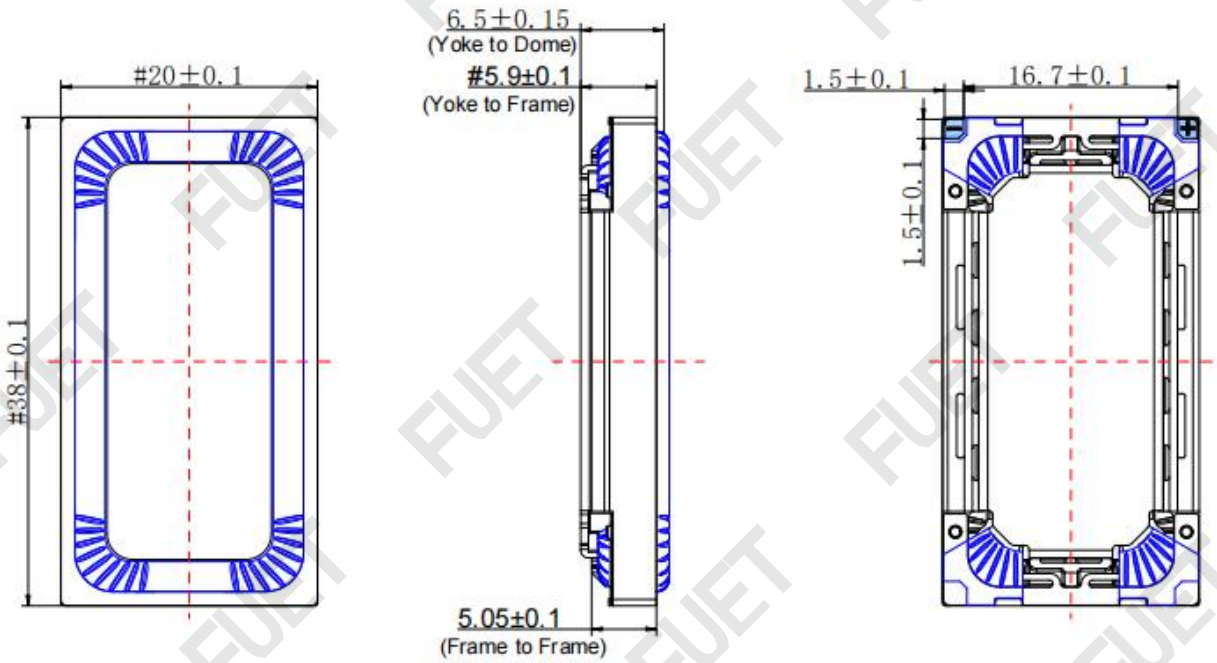

Unit: mm

#:critical dimension，CPK>1.33

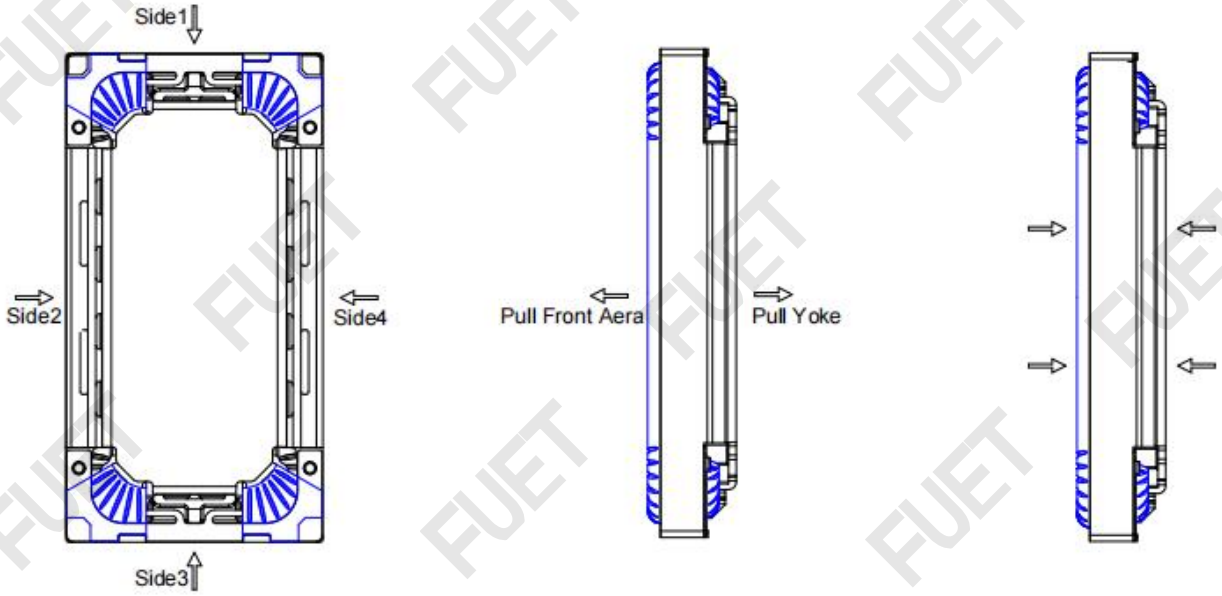

Force layout				
	From	to	Maximum permanent force	Maximum handling force
1	Back of Frame	Front Area	30 (N/100mm2)	40 (N/100mm2)
2	Yoke	Front Area	30 (N/100mm2)	40 (N/100mm2)
3	Side 1	Side 3	15 (N/100mm2)	15 (N/100mm2)
4	Side 2	Side 4	15 (N/100mm2)	15 (N/100mm2)
5	Pull force of Yoke		10 (N/100mm2)	10 (N/100mm2)

Remark:

PART NO.	PART NAME 名称	MATERIAL 材质
1	Dome	AL+PMI
2	Main Diaphragm	Silicone Rubber
3	Coil	CCAW
4	Frame	PC
5	FPC	PI+CU
6	Auxiliary Diaphragm	TPE
7	Plate	SPCC
8	Magnet	Nd-Fe-B
9	Yoke	SPCC
Note: Accord with RoHS2.0 standard		

PACKAGING

