福声科技
FUSHENG TECHNOLOGY

ROHS

SPECIFICATION OF PRODUCT

承 认 书

CUSTOMER: _____

DESCRIPTION: Ultrasonic Speaker

FUSHENG P/N: FUET-3840

CUSTOMER P/N: _____

DATE: 2018-8-28

CUSTOMER	APPROVER	CHECKER
	Yunqing Wu	Bing Yan

泰州福声电子科技有限公司

地址:江苏省泰州市海陵区凤凰西路98 号
电话：0086-523-86219066 传真：0086-523-81601108
邮箱: sales@electronic-tech.cn
网址：www.tzfsdz.com



1.SPECIFICATION 规格

No.	Item	Unit	Specification	Condition
1	Oscillation Frequency	Hz	20000±3000	
2	Operating Voltage	Vp-p	1 ~ 30	
3	Rated Voltage	Vp-p	5	
4	Current Consumption	mA	MAX. 10	at Rated Voltage
5	Sound Pressure Level	dB	MIN. 100	at 10cm at Rated Voltage
6	Electrostatic Capacity	pF	100000±30%	
7	Operating Temperature	℃	-20 ~ +70	
8	Storage Temperature	℃	-30 ~ +80	
9	Dimension	mm	38*H12.5	See appearance drawing
10	Weight (MAX)	gram	6	
11	Housing Material		ABS(Black)	
12	Environmental Protection Regulation		RoHS	

Buzzer Soldering process		Soldering Parameter		
		Temp.(^{0}C)	Time(Sec.)	Times
Inclusive Lead	Reflow soldering	230±10	above 170^{0}C time 40~70	2
	Wave soldering	245±5	3~6	1~2
	Manual soldering	330±10	1~2	1~2
Lead Free	Reflow soldering	245±15	above 180^{0}C time 40~70	3
	Wave soldering	260±5	4~8	2~3
	Manual soldering	350±10	1~3	2~3

2. APPEARANCE DRAWING

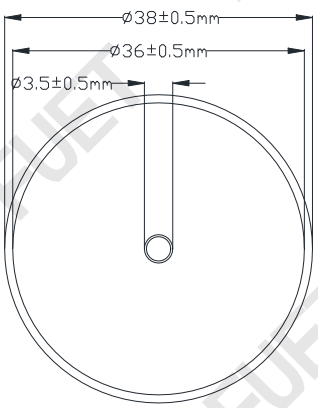

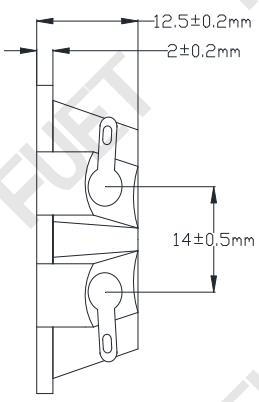

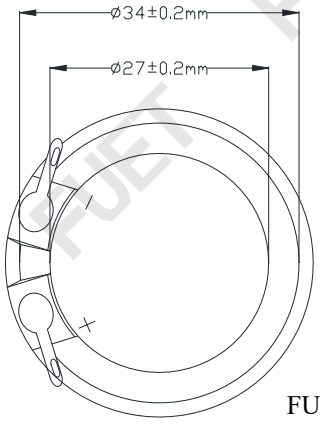

FUET-3840

3.TESTING METHOD 测量方式

Standard Measurement conditions

Temperature:25±2℃ Humidity:45-65%

Acoustic Characteristics:

The oscillation frequency, current consumption and sound pressure are measured by the measuring instruments shown below.

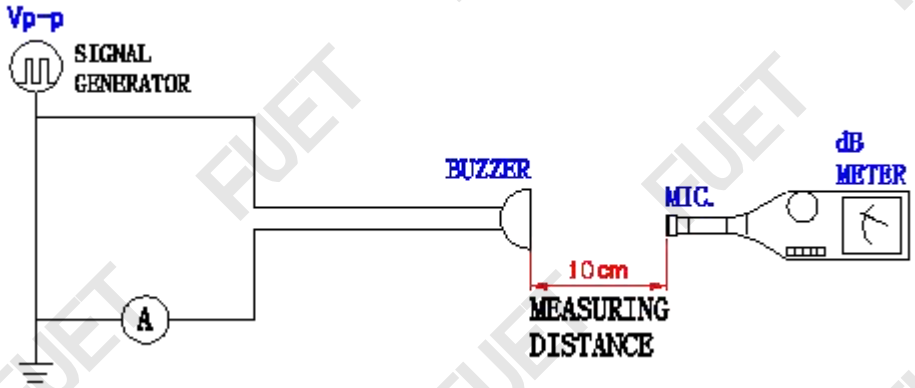

In the measuring test, buzzer is placed as follows:

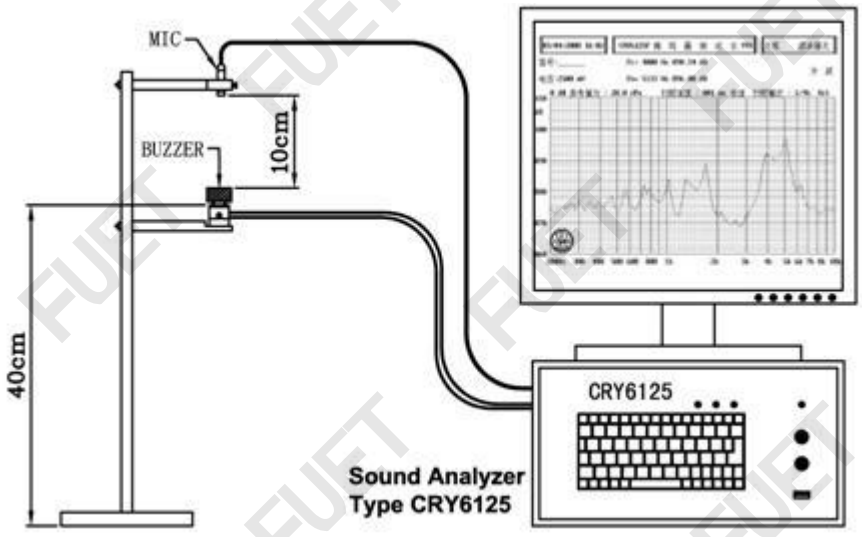

4. Typical Frequency Response Curve

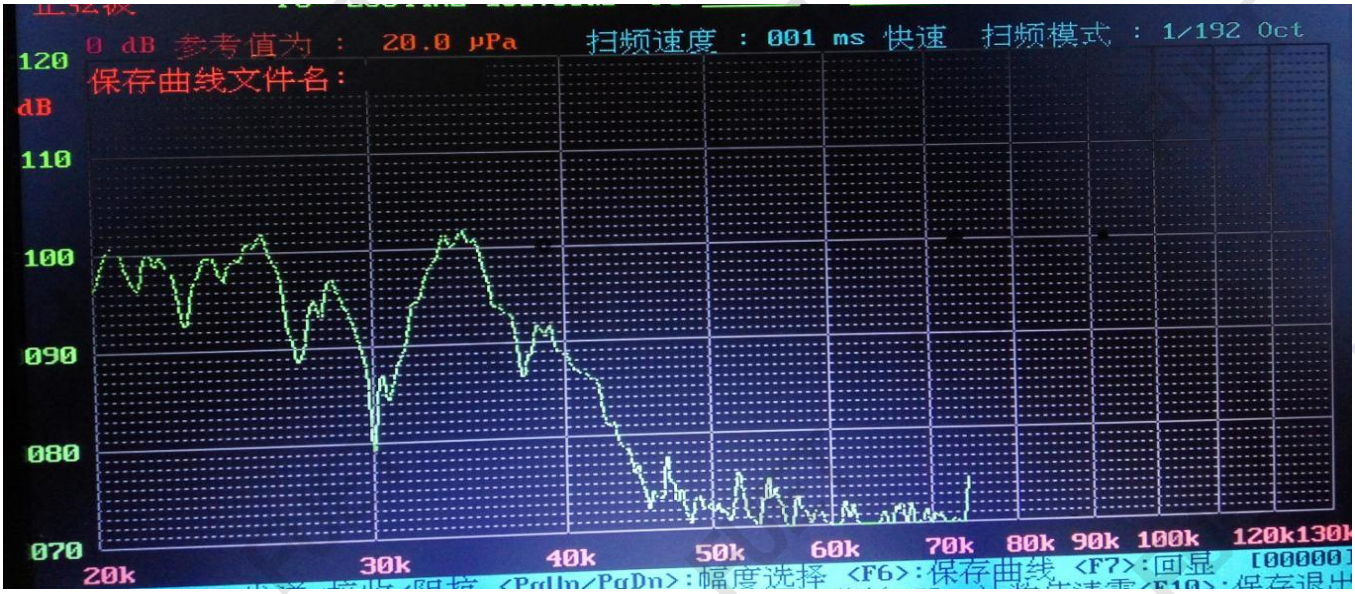

5.Soldering Condition

(1)Recommendable reflow soldering condition is as follows
(Reflow soldering is twice)

Note:It is requested that reflow soldering should be executed after heat of product goes down to normal.

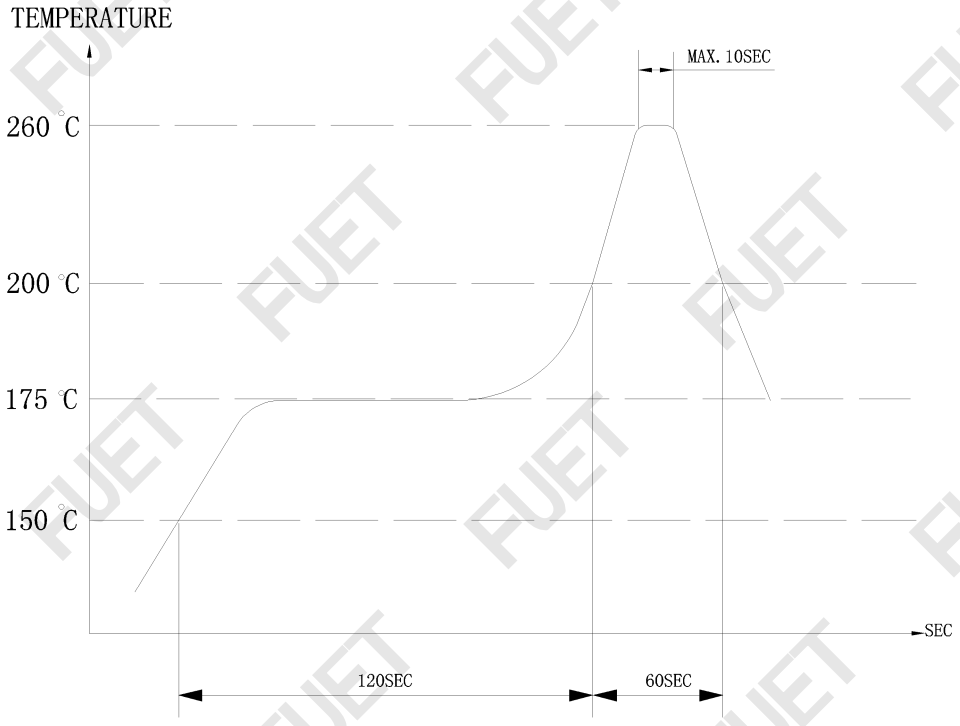

Heat resistant line
(Used when heat resistant reliability test is performed)

(2)Manual soldering

Manual soldering temperature 350 ºC within 5 se

6. RELIABILITY TEST

NO.	ITEM	TEST CONDITION AND REQUIREMENT
1	High Temperature Test (Storage)	After being placed in a chamber with 80ð 2ºC for 96 hours and then being placed in normal condition for 2 hours. Allowable variation of SPL after test: ð 10dB.
2	Low Temperature Test (Storage)	After being Placed in a chamber with -30ð 2ºC for 96 hours and then being placed in normal condition for 2 hours. Allowable variation of SPL after test: ð 10dB.
3	Humidity Test	After being Placed in a chamber with 90-95% R.H. at 40ð 2ºC for 96 hours and then being placed in normal condition for 2 hours. Allowable variation of SPL after test: ð 10dB.
4	Temperature Cycle Test	The part shall be subjected to 5 cycles. One cycle shall be consist of: 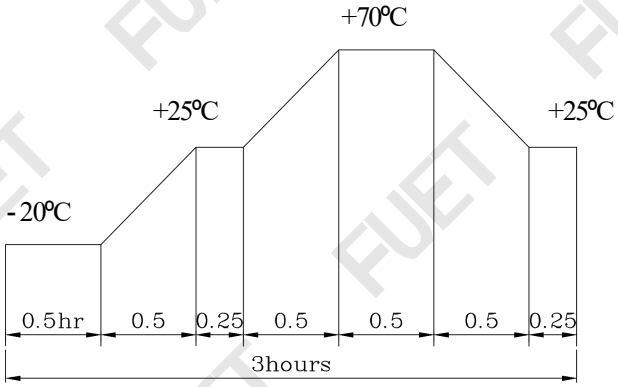 Allowable variation of SPL after test: ð 10dB.
5	Drop Test	Drop on a hard wood board of 4cm thick, any directions ,6 times, at the height of 75cm . Allowable variation of SPL after test: ð 10dB.
6	Vibration Test	After being applied vibration of amplitude of 1.5mm with 10 to 55 Hz band of vibration frequency to each of 3 perpendicular directions for 2 hours . Allowable variation of SPL after test: ð 10dB.
7	Solderability Test	Lead terminals are immersed in rosin for 5 seconds and then immersed in solder bath of +300ð 5ºC for 3ð 1 seconds . 90% min. lead terminals shall be wet with solder (Except the edge of terminals).
8	Terminal Strength Pulling Test	The force of 9.8N(1.0kg) is applied to each terminal in axial direction for 10 seconds. No visible damage and cutting off.

TEST CONDITION.

Standard Test Condition	:	a) Temperature : +5 ~ +35℃	b) Humidity : 45-85%	c) Pressure : 860-1060mbar
一般测试条件	:	a) 温度 : +5 ~ +35℃	b) 湿度 : 45-85%	c) 气压 : 860-1060mbar
Judgment Test Condition	:	a) Temperature : +25 ± 2℃	b) Humidity : 60-70%	c) Pressure : 860-1060mbar
争议时测试条件	:	a) 温度 : +25 ± 2℃	b) 湿度 : 60-70%	c) 气压 : 860-1060mbar