SPECIFICATION FOR APPROVAL

规　　格　　书

Customer (客户名称)：

Customer P/N(客户编号)：

Our P/N (本厂编号)：　FS2816NSW-H5.5-R01

Approval Date(日期)：　2026.10.16

Environment Request(环境标准)：

☐ Non-RoHS (非 RoHS 标准)　■ RoHS (RoHS 标准)

☐REACH (REACH 标准)　☐ Others (其他)

CUSTOMER'S APPROVED SIGNATURE		

福声科技 FUSHENG TECHNOLOGY

泰州福声电子科技有限公司

Taizhou Fusheng Electronic Technology Co.,Ltd.

Adds: No.98 of FengHuang Road West,Hailing District ,Taizhou .

地址：江苏省泰州市海陵区凤凰西路98号

Tel: +86-523-86219066　Fax: +86-523- 81601108

Http://www.tzfsdz.com　E-mail: fs.wu@electronic-tech.cn

	DESINGER	CHECKED	APPROVED
SIGNATURE			
DATE			

Alteration History

变更历史

Note 序号	Date 日 期	Detail changes 变　更　内　容	Reason 变更理由	Revision 变更表示

Speaker Specification

Part No.	Customer No 客户型号		Customer code 客户编号	
	Our Part No 本厂编号	FS2816NSW-H5.5-R01	Revision 版本	A

No.	Item 项目	Specification 规格	Testing Condition 测试条件
1.	Rated Imp 共称阻抗	4 ohm±15%	At 2KHz, 1Vrms
2.	Resonance Freq 最低共振周波数	1050 Hz±20%	Temperature ： 25℃/ 52%R.H in 5cc box
3.	Output S.P.L. 出力音压	111±3dB	4W/0.1M by average of (1K,1.18K,1.5K,2K) (1/12 Octave) in 5cc box
4.	Rated Power 额定功率	at 4W	At 4Vrms in 5CC box
5.	Max Power 最大功率	at 4.2W	At 4.1Vrms in 5CC box
6.	Frequency Range 实效频宽	840~20kHz	Output SPL-10dB
7.	Operation 可靠性试验	Must Be Normal at Rated Frequency Range	Program Source 4W FO-10kHz
8.	Buzzes & Rattles 异常音试验	Must be free audible noise (buzzes and rattles) 无异常声	4 V Sine Wave (from 840Hz to 3.0kHz 3.0S) in 5cc box
9.	T H D 失真	10% Max	at 1KHz-10KHz , 4W/0.1M in 5cc box
10.	Magnet 磁铁	Nd Fe B	
11.	Operating Temperature 动作温度	-20℃ to +60℃	
12.	Storage Temperature 储存温度	-40℃ to +80℃	
13.	Waterproof Level 防水等级	NA	
14.	Weight 重量	10.5±10% g	

15.	Cold Test 耐寒试验	Must be normal after having been in a test chamber for 96 hours at the condition of-25℃ ±3℃and then left 2 hours in a room. (-25℃±3℃,96 小时试验，常温 2 小时后,无异常的不良)
16.	Heat Test 耐热试验	Must be normal after having been in a test chamber for 96 hours at the condition of+60℃ ±3℃and then left 2 hours in a room. (+60℃±3℃,96 小时试验，常温 2 小时后,无异常的不良)
17.	Load Test 连续负荷试验	Must be normal after load test :Pink noise high pass filter 840Hz-12dB/Oct / rating power, 96hrs. (粉噪音 2.0W 在5cc音腔内连续 96 小时试验后无异常的不良)
18.	Short Term Max Power test 瞬间最大功率试验	Power: 1w 1 sec. on, 1 min. off, for a total of 60 cycles. Must be normal after the test. (在5cc音腔内输入1W信号连续1分钟工作，无永久性损伤)
19.	Polarity 极性	When a positive D.C voltage is applied to the terminal Marked(+)or red, the diaphragm should move to the front. (红线为正极,黑线为负极)
20.	DROP TEST 跌落试验	DUTs shall be mounted in a special fixture. It falls six times each front side and back side , and the height is 1m from concrete floor. (12 times in total) (从 1.0m 的高度跌落 12次,无异常不良)

Temperature Cycle Test

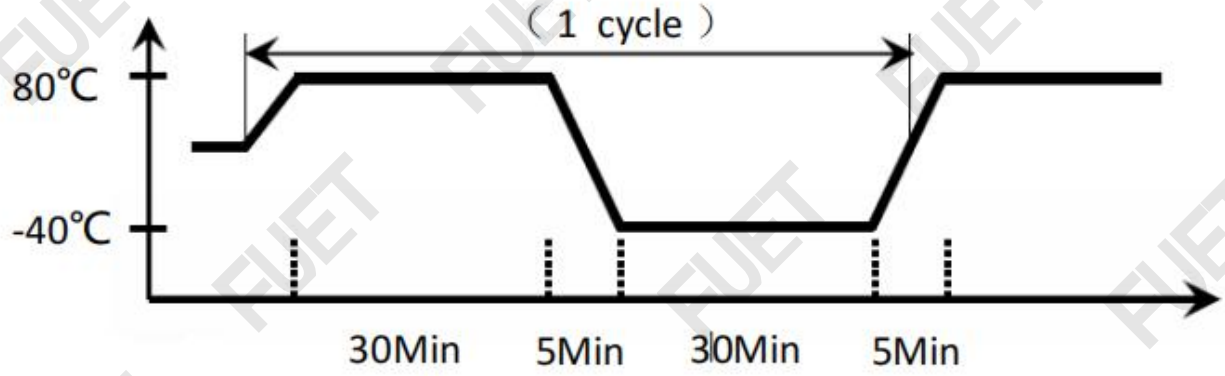

Frequency Response

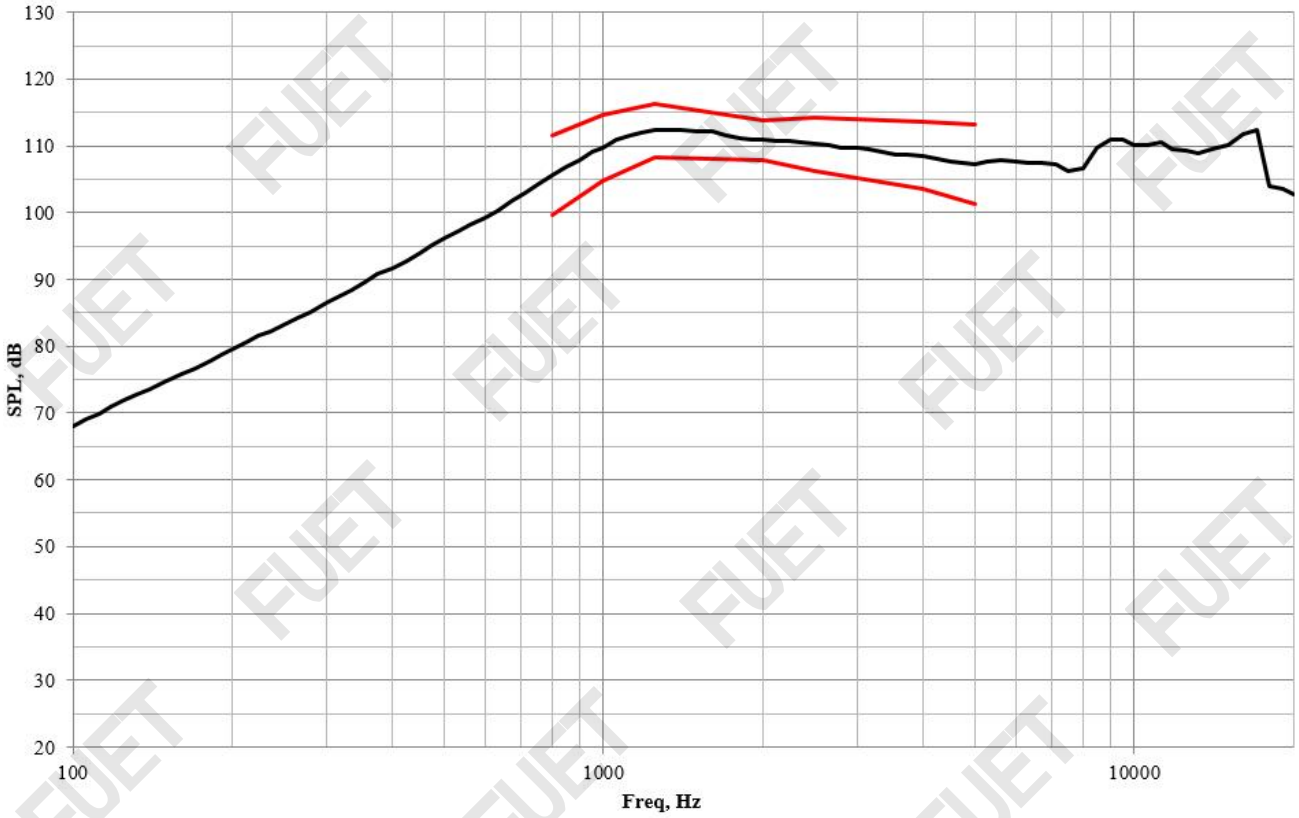

Tolerance Limit Data for Frequency Response							
Freq. (Hz)	800	1000	1250	2000	2500	4000	5000
Limit(dB)	+6	+5	+4	+3	+4	+5	+6
Limit(dB)	-6	-5	-4	-3	-4	-5	-6

THD

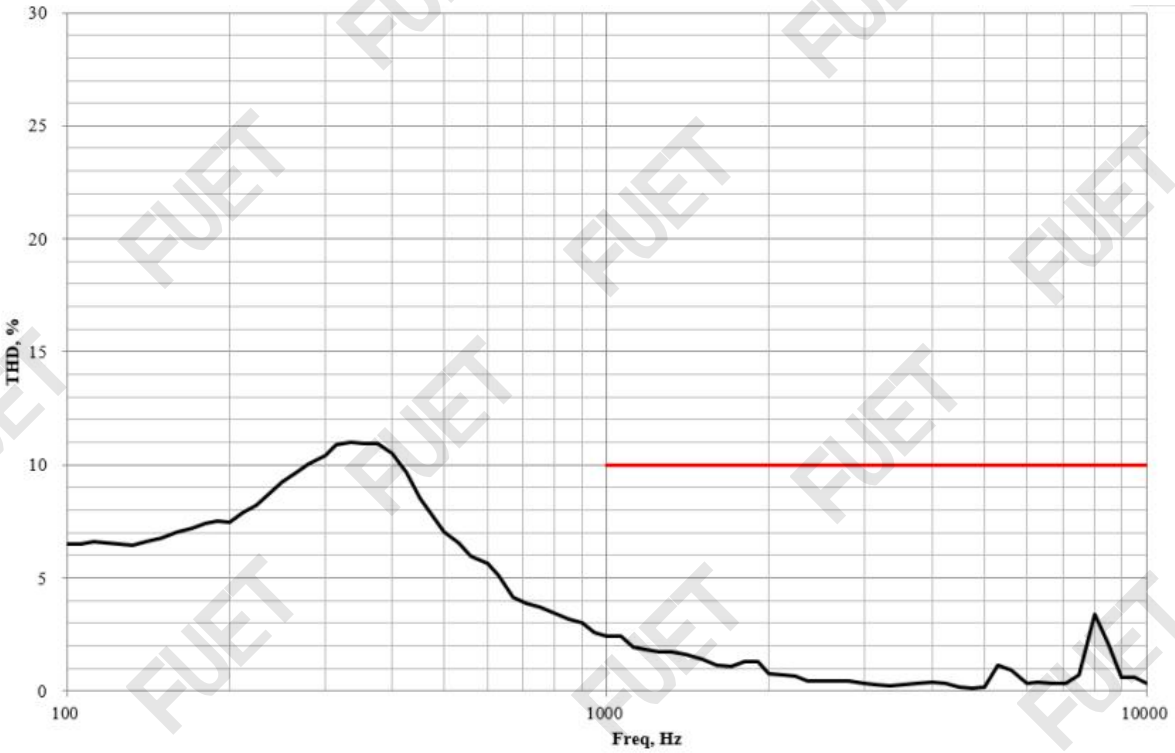

Tolerance Limit Data for THD		
Freq.(Hz)	1000	10000
Limit(%)	10	10

R&B

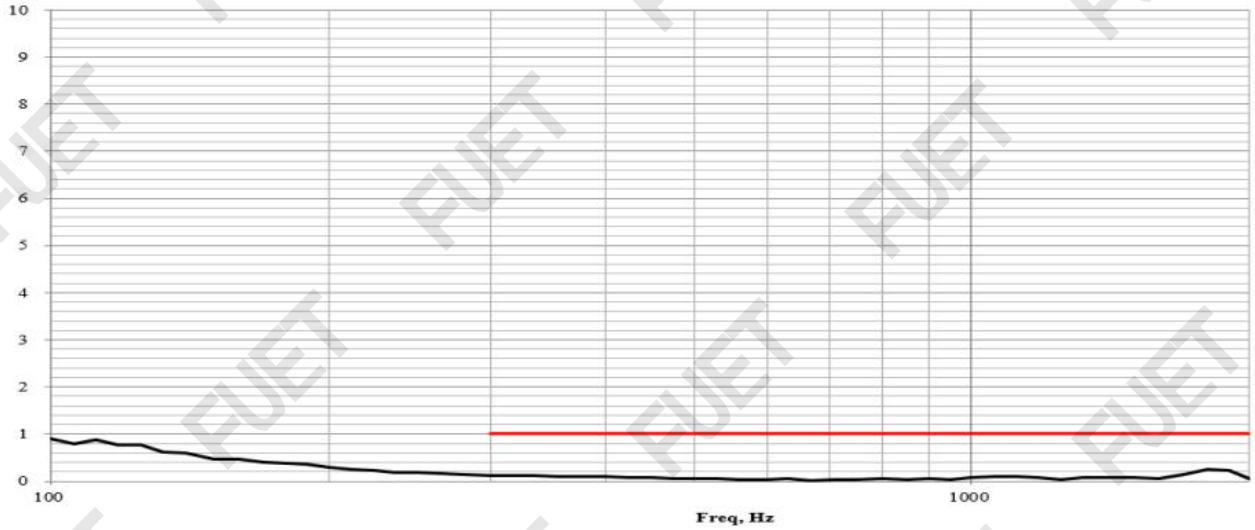

Tolerance Limit Data for Rub & Buzz		
Freq.(Hz)	300	2000
Limit(%)	1	1

Product Outside View

Tolerance : ± 0.3mm (see below)

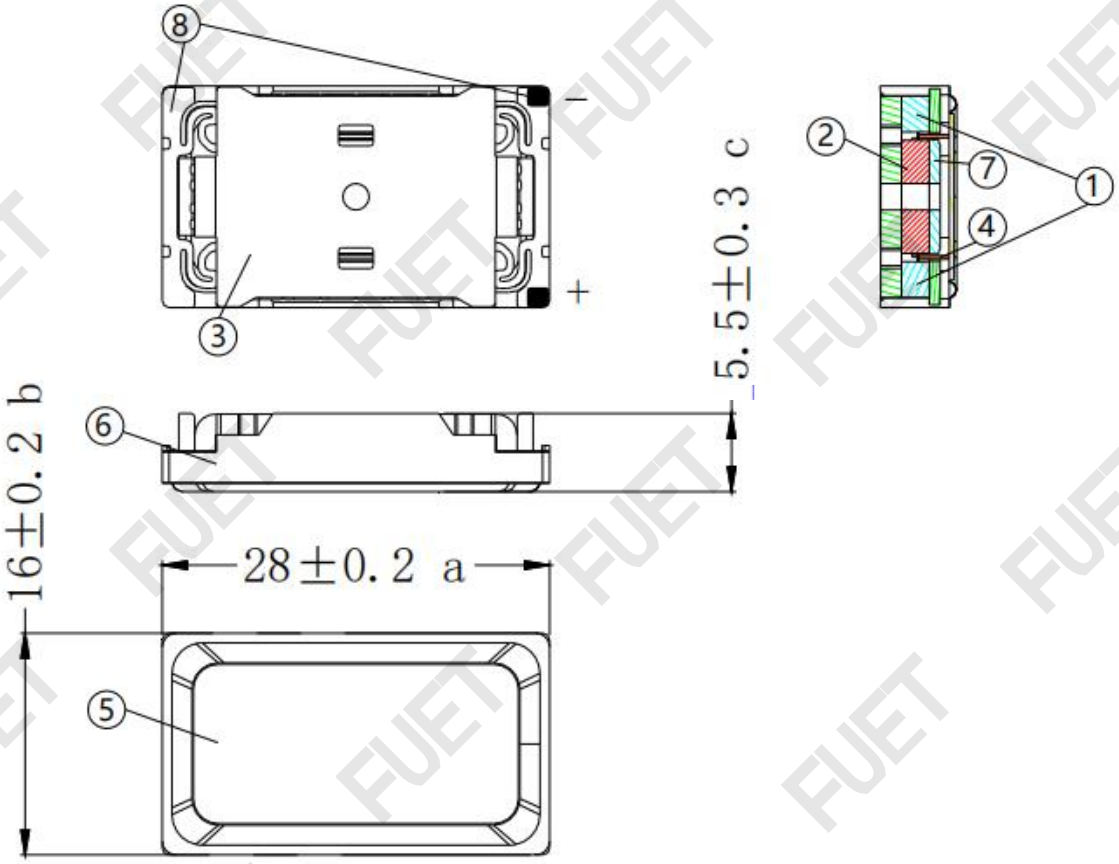

Remark:

PART NO.	DESCRIPTION	MATERIAL
1	Magnet	NdFeB
2	Magnet	NdFeB
3	Yoke	SPCC
4	Voice coil	Copper
5	Diaphragm	PEEK+PMI
6	Frame	PPA
7	Plate	SPCC
8	FPC	FPC
Note: Accord with RoHS2.0 standard		