| | | |
|---|---|---|
| $V_{DSS}$ | 30 | V |
| $I_D$ | 50 | A |
| $R_{DS(ON)}$ | 6.5mΩ | |

## FEATURES

100% EAS Guaranteed
Green Device Available
Super Low Gate Charge
Excellent CdV/dt effect decline
Advanced high cell density Trench technology







## DESCRIPTION

The 50N03 is the high cell density trenched N-ch MOSFETs, which provide excellent RDSON and gate charge for most of the synchronous buck converter applications.

The 50N03 meet the RoHS and Green Product requirement, 100% EAS guaranteed with full function reliability approved.

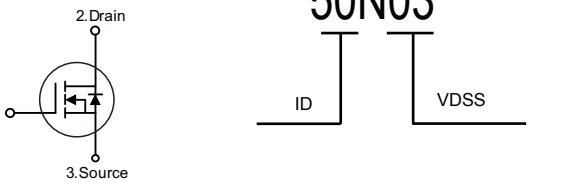





## MAXIMUM RATINGS AND ELECTRICAL CHARACTERISTICS

### Absolute Maximum Ratings

| Symbol | Parameter | Rating | | Units |
|---|---|---|---|---|
| | | 10s | Steady State | |
| $V_{DS}$ | Drain-Source Voltage | 30 | | V |
| $V_{GS}$ | Gate-Source Voltage | ±20 | | V |
| $I_D$@$T_C$=25℃ | Continuous Drain Current, $V_{GS}$ @ 10V[1] | 50 | | A |
| $I_D$@$T_C$=100℃ | Continuous Drain Current, $V_{GS}$ @ 10V[1] | 33 | | A |
| $I_{DM}$ | Pulsed Drain Current[2] | 198 | | A |
| EAS | Single Pulse Avalanche Energy[3] | 36 | | mJ |
| $I_{AS}$ | Avalanche Current | 12 | | A |
| $P_D$@$T_C$=25℃ | Total Power Dissipation[4] | 32.5 | | W |
| $T_{STG}$ | Storage Temperature Range | -55 to 175 | | ℃ |
| $T_J$ | Operating Junction Temperature Range | -55 to 175 | | ℃ |

### Thermal Data

| Symbol | Parameter | Typ. | Max. | Unit |
|---|---|---|---|---|
| $R_{\theta JC}$ | Thermal Resistance Junction-Case[1] | --- | 3.56 | ℃/W |

## Electrical characteristics ($T_J$=25℃ unless otherwise noted)

| Symbol | Parameter | Test Condition | Min. | Typ. | Max. | Units |
|---|---|---|---|---|---|---|
| **Off Characteristic** | | | | | | |
| $V_{(BR)DSS}$ | Drain-Source Breakdown Voltage | $V_{GS}$=0V, $I_D$=250μA | 30 | - | - | V |
| $I_{DSS}$ | Zero Gate Voltage Drain Current | $V_{DS}$ =30V, $V_{GS}$=0V, | - | - | 1.0 | μA |
| $I_{GSS}$ | Gate to Body Leakage Current | $V_{DS}$=0V, $V_{GS}$=±20V | - | - | ±100 | nA |
| **On Characteristics** | | | | | | |
| $V_{GS(th)}$ | Gate Threshold Voltage | $V_{DS}$=$V_{GS}$, $I_D$=250μA | 1.0 | 1.5 | 2.5 | V |
| $R_{DS(on)}$ | Static Drain-Source on-Resistance note3 | $V_{GS}$=10V, $I_D$=25A | - | 6.5 | 8.5 | mΩ |
| | | $V_{GS}$=4.5V, $I_D$=15A | - | 10 | 15 | |
| **Dynamic Characteristics** | | | | | | |
| $C_{iss}$ | Input Capacitance | $V_{DS}$=15V, $V_{GS}$=0V, f=1.0MHz | - | 1140 | - | pF |
| $C_{oss}$ | Output Capacitance | | - | 175 | - | pF |
| $C_{rss}$ | Reverse Transfer Capacitance | | - | 151 | - | pF |
| $Q_g$ | Total Gate Charge | $V_{DS}$=15V, $I_D$=25A, $V_{GS}$=10V | - | 13.3 | - | nC |
| $Q_{gs}$ | Gate-Source Charge | | - | 3.1 | - | nC |
| $Q_{gd}$ | Gate-Drain(“Miller”) Charge | | - | 5 | - | nC |
| **Switching Characteristics** | | | | | | |
| $t_{d(on)}$ | Turn-on Delay Time | $V_{DS}$=15V, $I_D$=25A, $R_{GEN}$=3Ω, $V_{GS}$=10V | - | 15 | - | ns |
| $t_r$ | Turn-on Rise Time | | - | 19 | - | ns |
| $t_{d(off)}$ | Turn-off Delay Time | | - | 35 | - | ns |
| $t_f$ | Turn-off Fall Time | | - | 21 | - | ns |
| **Drain-Source Diode Characteristics and Maximum Ratings** | | | | | | |
| $I_S$ | Maximum Continuous Drain to Source Diode Forward Current | | - | - | 50 | A |
| $I_{SM}$ | Maximum Pulsed Drain to Source Diode Forward Current | | - | - | 200 | A |
| $V_{SD}$ | Drain to Source Diode Forward Voltage | $V_{GS}$=0V, $I_S$=30A | - | - | 1.2 | V |
| trr | Body Diode Reverse Recovery Time | $I_F$=30A,dI/dt=100A/μs | - | 25 | - | ns |
| Qrr | Body Diode Reverse Recovery Charge | | - | 26 | - | nC |

Notes:1. Repetitive Rating: Pulse Width Limited by Maximum Junction Temperature

2. EAS condition: $T_J$=25℃, $V_{DD}$=15V, $V_G$=10V, $R_G$=25Ω, L=0.5mH, $I_{AS}$=12A

3. Pulse Test: Pulse Width≤300μs, Duty Cycle≤0.5%

## RATING AND CHARACTERISTIC CURVES

**Figure1:** Output Characteristics

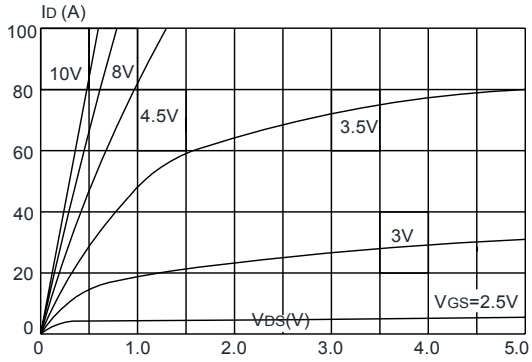


**Figure 2:** Typical Transfer Characteristics

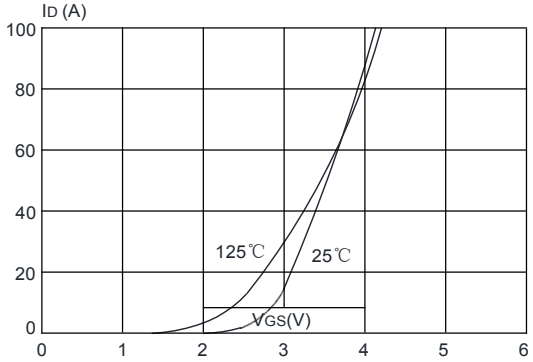


**Figure 3:**On-resistance vs. Drain Current

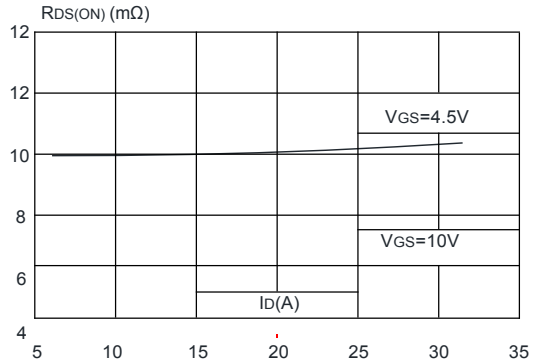


**Figure 4**: Body Diode Characteristics

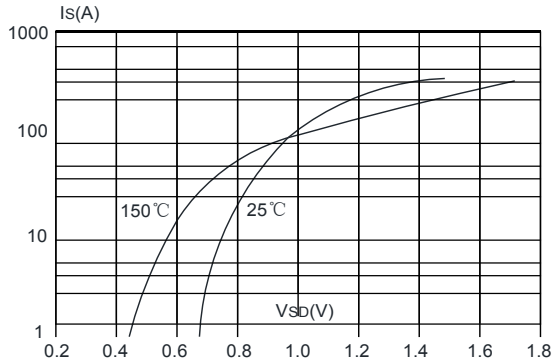


**Figure 5:** Gate Charge Characteristics

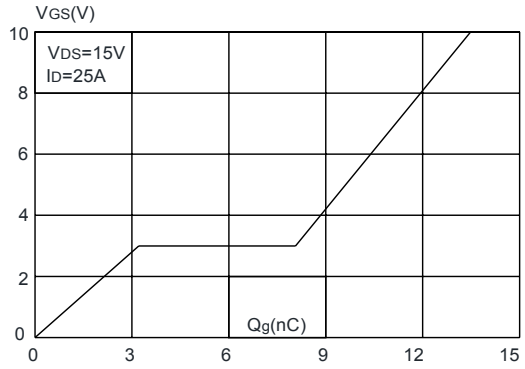


**Figure 6:** Capacitance Characteristics

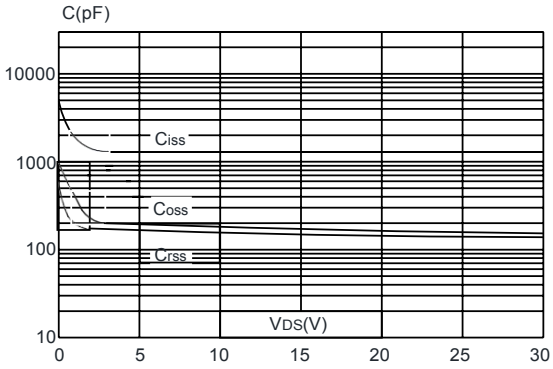

## RATING AND CHARACTERISTIC CURVES

**Figure 7:** Normalized Breakdown Voltage vs. Junction Temperature

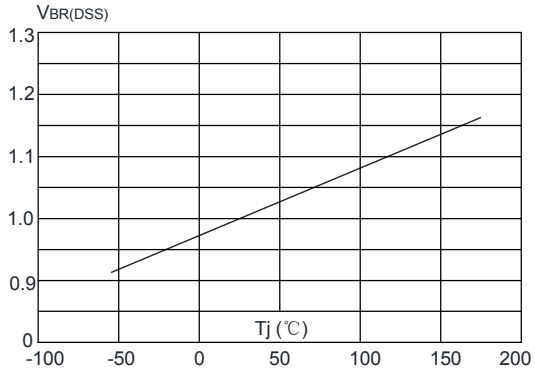


**Figure 8:** Normalized on Resistance vs. Junction Temperature

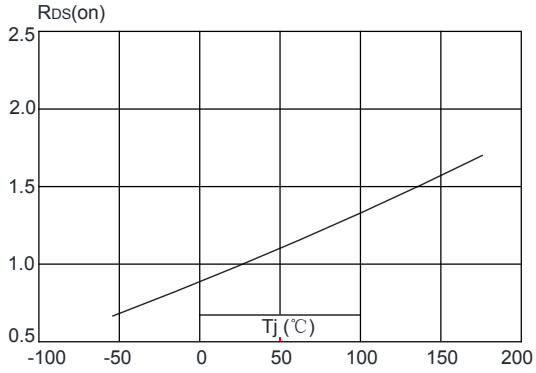


**Figure 9:** Maximum Safe Operating Area

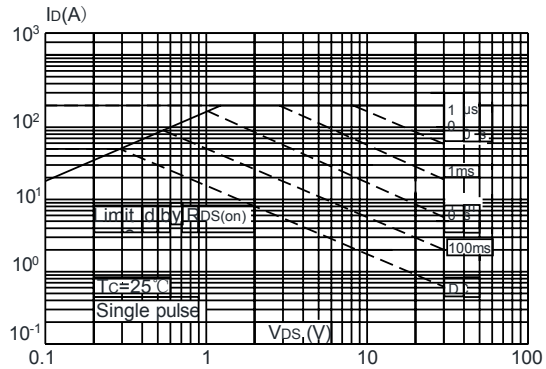


**Figure 10:** Maximum Continuous Drain Current vs. Case Temperature

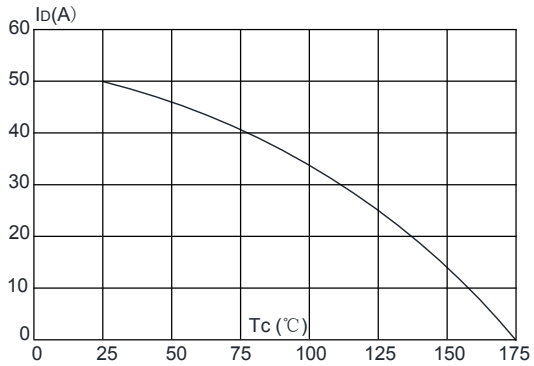


Maximum Effective Transient Thermal Impedance, Junction-to-Case

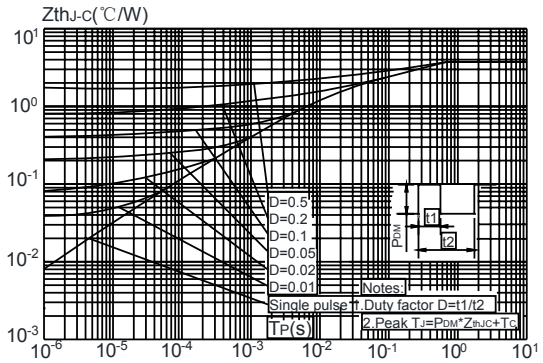

## Test Circuit

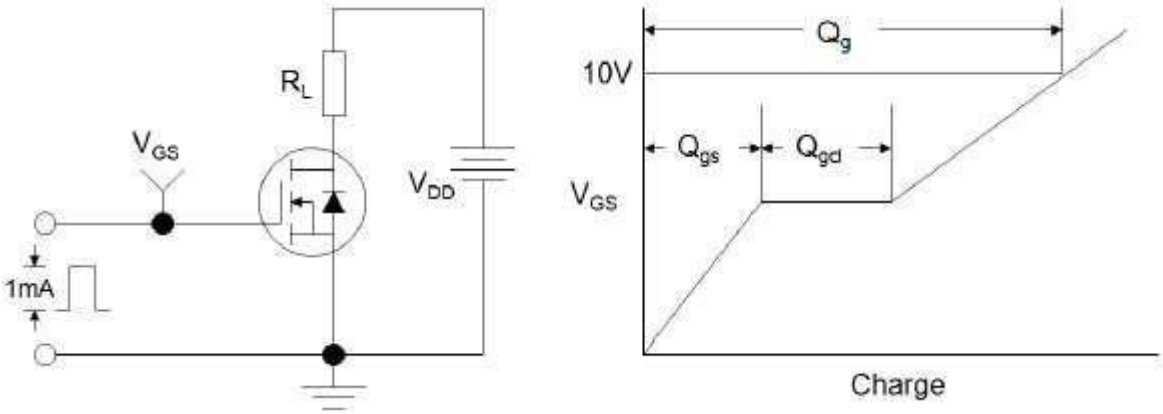


**Figure1:Gate Charge Test Circuit & Waveform**

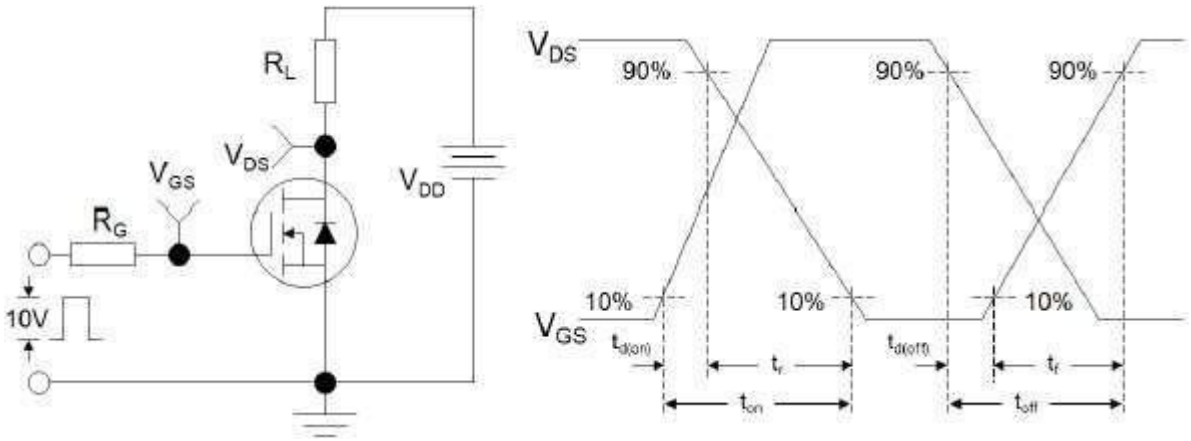


**Figure 2: Resistive Switching Test Circuit & Waveforms**

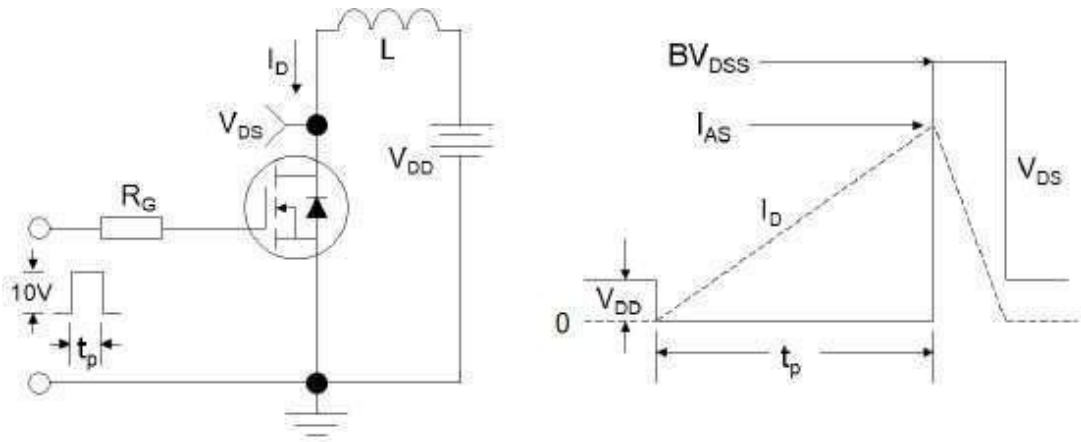


**Figure 3:Unclamped Inductive Switching Test Circuit & Waveforms**

## Soldering parameters

| Reflow Condition | | Pb-Free assembly (see as bellow) |
|---|---|---|
| Pre Heat | -Temperature Min ($T_{s(min)}$) | +150℃ |
| | -Temperature Max($T_{s(max)}$) | +200℃ |
| | -Time (Min to Max) (ts) | 60-180 secs. |
| Average ramp up rate (Liquid us Temp ($T_L$) to peak) | | 3℃/sec. Max |
| $T_{s(max)}$ to $T_L$ - Ramp-up Rate | | 3℃/sec. Max |
| Reflow | -Temperature($T_L$)(Liquid us) | +217℃ |
| | -Temperature($t_L$) | 60-150 secs. |
| Peak Temp ($T_p$) | | +260(+0/-5)℃ |
| Time within 5℃ of actual Peak Temp ($t_p$) | | 30 secs. Max |
| Ramp-down Rate | | 6℃/sec. Max |
| Time 25℃ to Peak Temp ($T_P$) | | 8 min. Max |
| Do not exceed | | +260℃ |

**FIG5:** Reflow condition

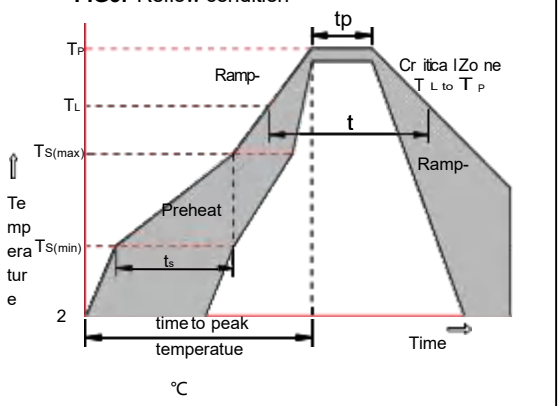


## Package Dimensions & Suggested Pad Layout

TO-252

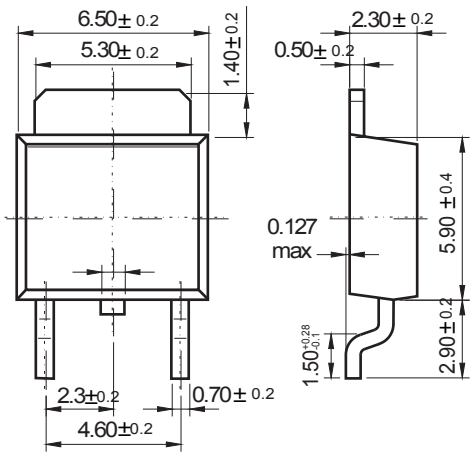


Dimensions in inches and (millimeters)

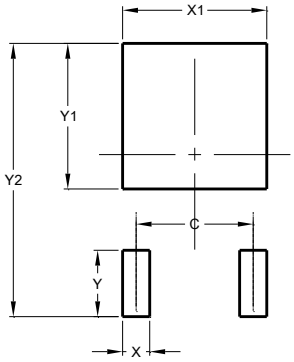


| Dimensions | Value (in mm) |
|---|---|
| C | 4.55 |
| X | 1.50 |
| X1 | 5.80 |
| Y | 2.70 |
| Y1 | 6.00 |
| Y2 | 10.90 |

## Tape & rell specification

Tape

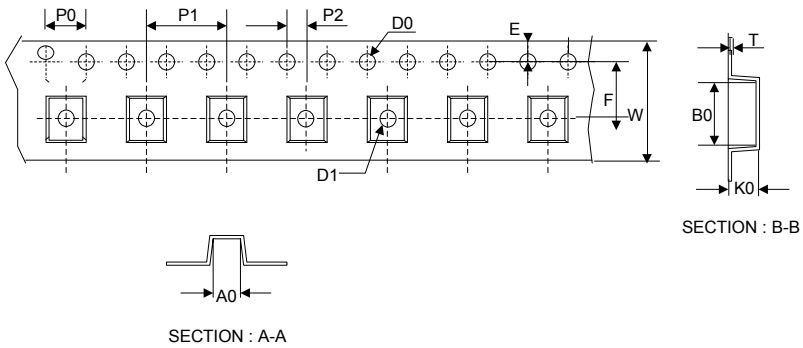


| Symbol | Dimension (mm) |
|---|---|
| P0 | 4.00±0.20 |
| P1 | 8.00±0.20 |
| P2 | 2.00±0.20 |
| D0 | 1.55±0.15 |
| D1 | 1.55±0.20 |
| E | 1.75±0.20 |
| F | 7.50±0.20 |
| W | 16.00±0.20 |
| A0 | 7.10±0.20 |
| B0 | 10.50±0.20 |
| K0 | 2.70±0.20 |
| T | 0.30±0.10 |

13” Reel

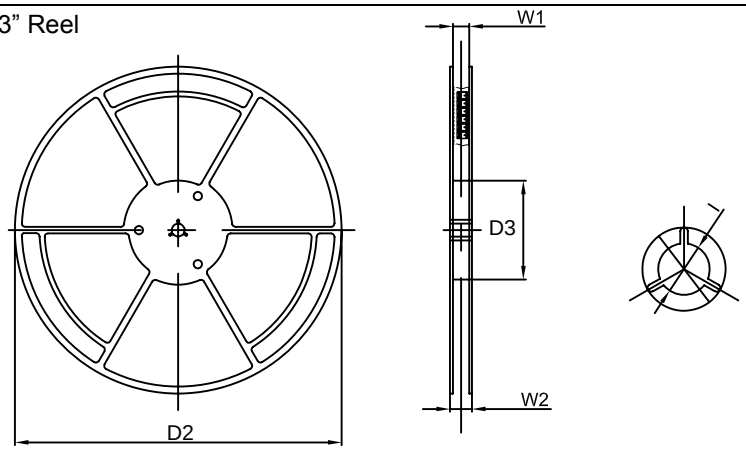


| | |
|---|---|
| D2 | 330.0±5.0 |
| D3 | 100.0±4.0 |
| W1 | 20.0±5.0 |
| W2 | 25.0±5.0 |
| I | 13.0±2.0 |

Quantity: 2500PCS