Nov.1.2026 Copyright 2026 HIROSE ELECTRIC CO., LTD. All Rights Reserved.
In case of consideration for using Automotive equipment / device which demand high reliability, kindly contact our sales window correspondents.

	△数 COUNT	訂正事項 DESCRIPTION OF REVISIONS	擔當 B Y	檢圖 CHKD	年月日 DATE	△数 COUNT	訂正事項 DESCRIPTION OF REVISIONS	擔當 B Y	檢圖 CHKD	年月日 DATE
△					. .	△				. .
△					. .	△				. .
△					. .	△				. .

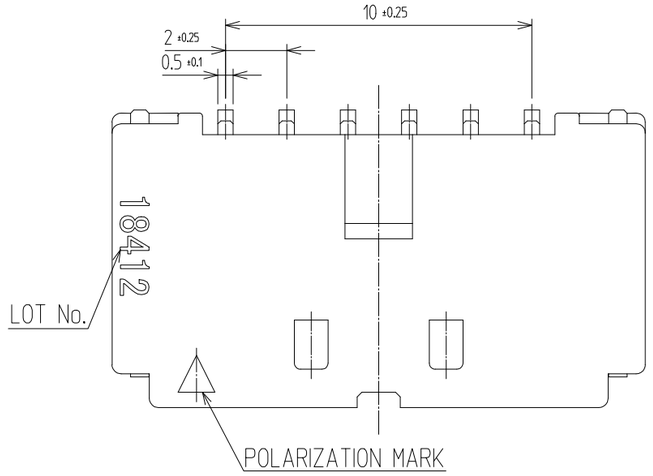

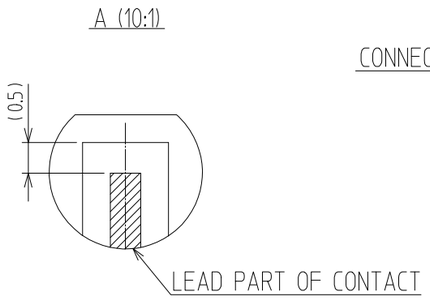

RECOMMENDED PCB LAYOUT(Top-View)

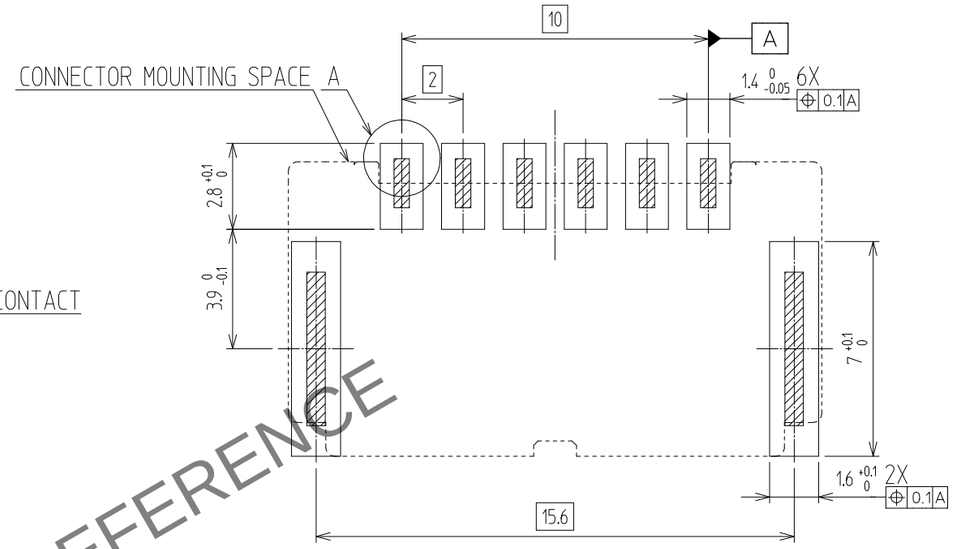

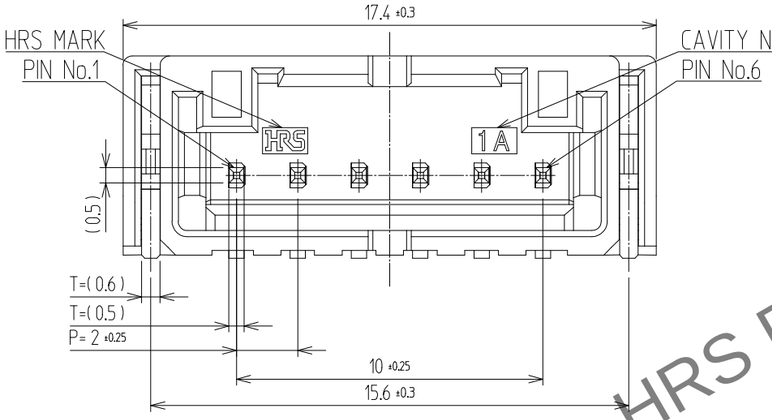

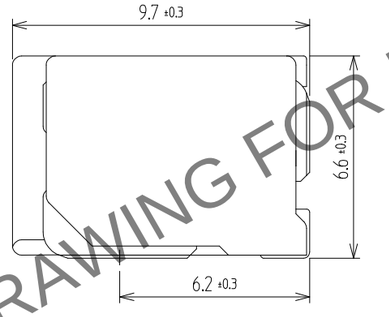

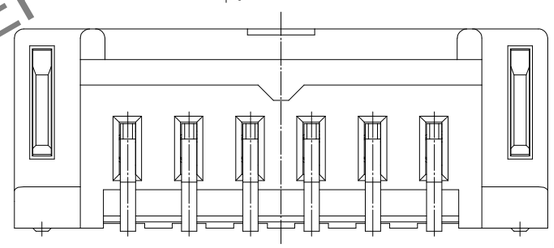

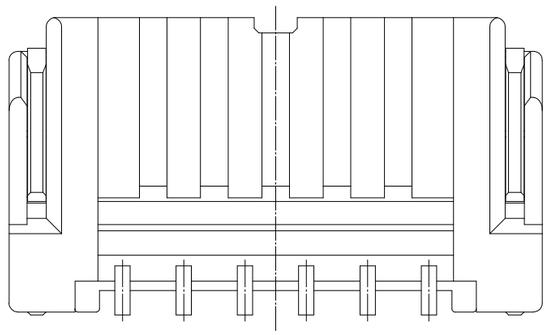

HRS DRAWING FOR REFERENCE

NOTE
1. SOLDERING TEMPERATURE : 250°C PEAK, 10sec MAX.
2. OPERATING TEMPERATURE : -55°~105°C
3. USED REFLOW SYSTEM : IN THE AIR OR NITROGEN
4. NO. OF CYCLES : 2 MAX
5. MATING PART
   FEMALE : DF51K-6S-2C
6. CO-PLANARITY : 0.12 MAX.
7. RECOMMENDED PCB THICKNESS IS 1.6mm.
8. RECOMMENDED SOLDER THICKNESS IS 0.15mm
9. UL(File No. E132750) AUTHORIZATION ARTICLE.
   C-UL(File No. E132750) AUTHORIZATION ARTICLE.

MATING FIGURE (4:1)

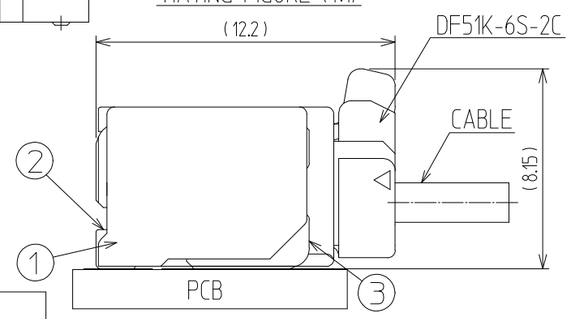

NO.	MATERIAL	FINISH,REMARKS	NO.	MATERIAL	FINISH,REMARKS
3	BRASS	TIN PLATED : 1μm MIN UNDER PLATING : NICKEL 1μm MIN	7	PS	REEL BOBBIN
2	BRASS	CONTACT AREA : GOLD 0.1μm MIN SMT LEAD : GOLD 0.05μm MIN UNDER PLATING : NICKEL 1μm MIN	6	PET	COVER TAPE
			5	CONNECTOR	DF51K-6P-2H
1	LCP	BLACK	4	PS	EMBOSS CARRIER TAPE

CODE NO. (OLD)	DRAWN	DESIGNED	CHECKED	APPROVED	RELEASED
	CHO 22.04.20 J.S	CHO 22.04.20 J.S	LIM 22.04.20 S.M	LIM 22.04.20 S.M	ENG 2023.07.24 DEPT

SCALE 5:1 UNITS mm	DRAWING NO. EDC3-633490 HRS HIROSE KOREA CO.,LTD.	PART NO. DF51K-6P-2H(805) CODE NO CL 6652-0075-8-805 1/2

Nov.1.2026 Copyright 2026 HIROSE ELECTRIC CO., LTD. All Rights Reserved.
In case of consideration for using Automotive equipment / device which demand high reliability, kindly contact our sales window correspondents.

	△数 COUNT	訂正事項 DISCRIPTION OF REVISIONS	擔當 B Y	檢圖 CHKD	年月日 DATE		△数 COUNT	訂正事項 DISCRIPTION OF REVISIONS	擔當 B Y	檢圖 CHKD	年月日 DATE
△					. .	△					. .
△					. .	△					. .
△					. .	△					. .

PACKING STYLE

PACKING STYLE DRAWING

EMBOSS (2:1)

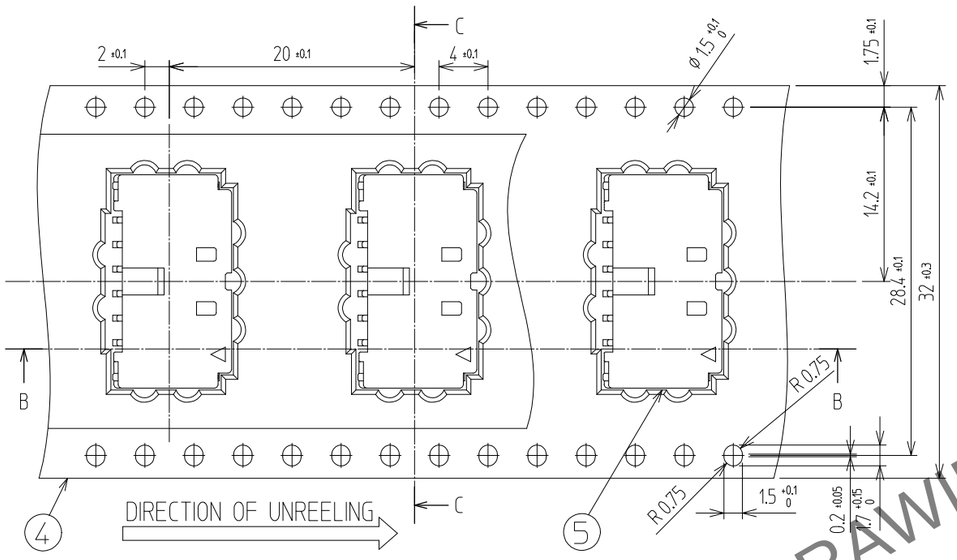

C-C (2:1)

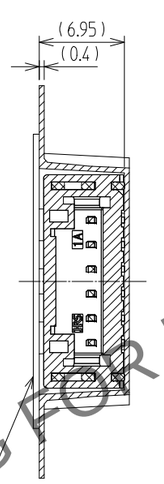

B-B (2:1)

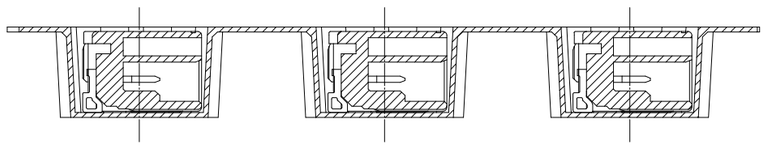

REEL DIMENTSION (FREE)

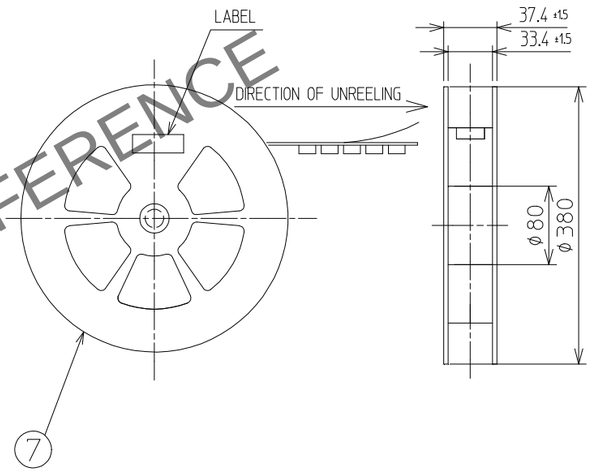

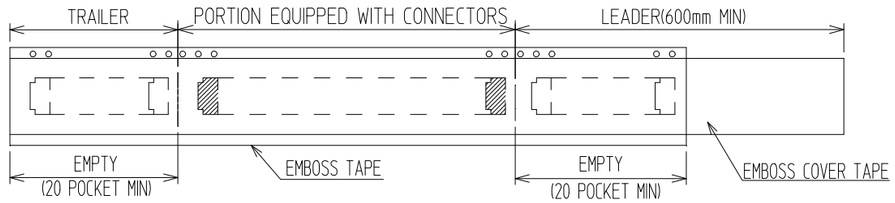

HRS DRAWING FOR REFERENCE

SCALE 5:1 UNITS mm	DRAWING NO. EDC3-633490	PART NO. DF51K-6P-2H(805)
	HRS HIROSE KOREA CO.,LTD.	CODE NO CL 6652-0075-8-805
		2/2