LM2596

DATASHEET

Specification Revision History:

Version	Date	Description
V1.0	2020/06	New
V1.1	2021/03	Modify Ordering Information
V1.2	2023/02	Modify Ordering Information
V1.3	2026/01	Add application precautions and overall typesetting.

General Description

The LM2596 is a 52 KHz fixed frequency PWM buck(step-down) DC/DC converter, capable of driving a 3A load with high efficiency, low ripple and excellent line and load regulation.Requiring a minimum number of external components,the regulator is simple to use and include internal frequency compensation and a fixed-frequency oscillator.

The PWM control circuit is able to adjust the duty ratio linearly from 0 to 100%. An enable function, an over current protection function is built inside. When second current limit function happens, the operation frequency will be reduced from 52KHz to 13KHz. An internal compensation block is built in to minimize external component count.

Features

※ Wide 4.5V to 40V Input Voltage Range
※ 3.3V,5V,12V, and adjustable versions
※ Output Adjustable from 1.23V to 37V
※ Maximum Duty Cycle 100%
※ Minimum Drop Out 1.0V
※ Fixed 52KHz Switching Frequency
※ 3A Constant Output Current Capability
※ Internal Optimize Power Transistor
※ High efficiency
※ TTL shutdown capability
※ Excellent line and load regulation
※ Built in thermal shutdown function
※ Built in current limit function
※ Built in output short protection function
※ Available in TO220-5L/TO263-5L packages

Applications

※ Portable DVD
※ LCD Monitor / TV
※ Battery Charger
※ ADSL Modem
※ Telecom / Networking Equipment

The appearance of the product

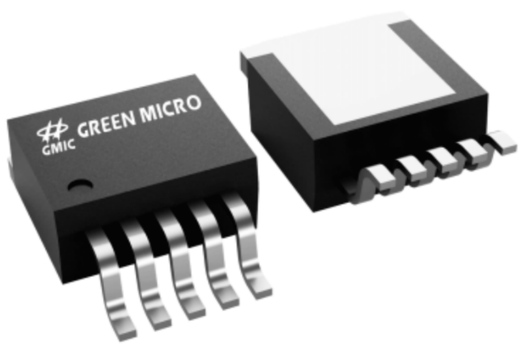

TO-263-5

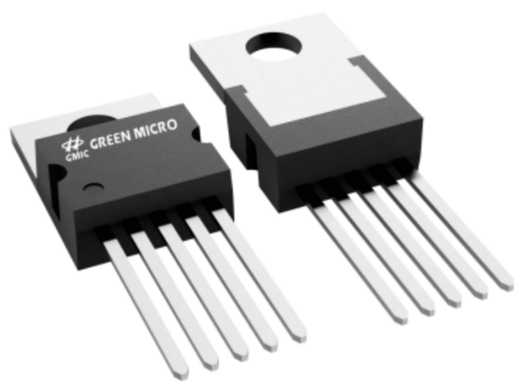

TO-220-5

Ordering Information

Product Model	Package Type	Packing	Packing Qty
LM2596S-ADJNTC	TO-263-5	TUBE	1000PCS/BOX
LM2596S-3.3NTC	TO-263-5	TUBE	1000PCS/BOX
LM2596S-5.0NTC	TO-263-5	TUBE	1000PCS/BOX
LM2596S-12NTC	TO-263-5	TUBE	1000PCS/BOX
LM2596S-ADJOTC	TO-263-5	REEL	500PCS/REEL
LM2596S-3.3OTC	TO-263-5	REEL	500PCS/REEL
LM2596S-5.0OTC	TO-263-5	REEL	500PCS/REEL
LM2596S-12OTC	TO-263-5	REEL	500PCS/REEL
LM2596S-ADJETC	TO-220-5	TUBE	1000PCS/BOX
LM2596S-3.3ETC	TO-220-5	TUBE	1000PCS/BOX
LM2596S-5.0ETC	TO-220-5	TUBE	1000PCS/BOX
LM2596S-12ETC	TO-220-5	TUBE	1000PCS/BOX

Pin Configurations

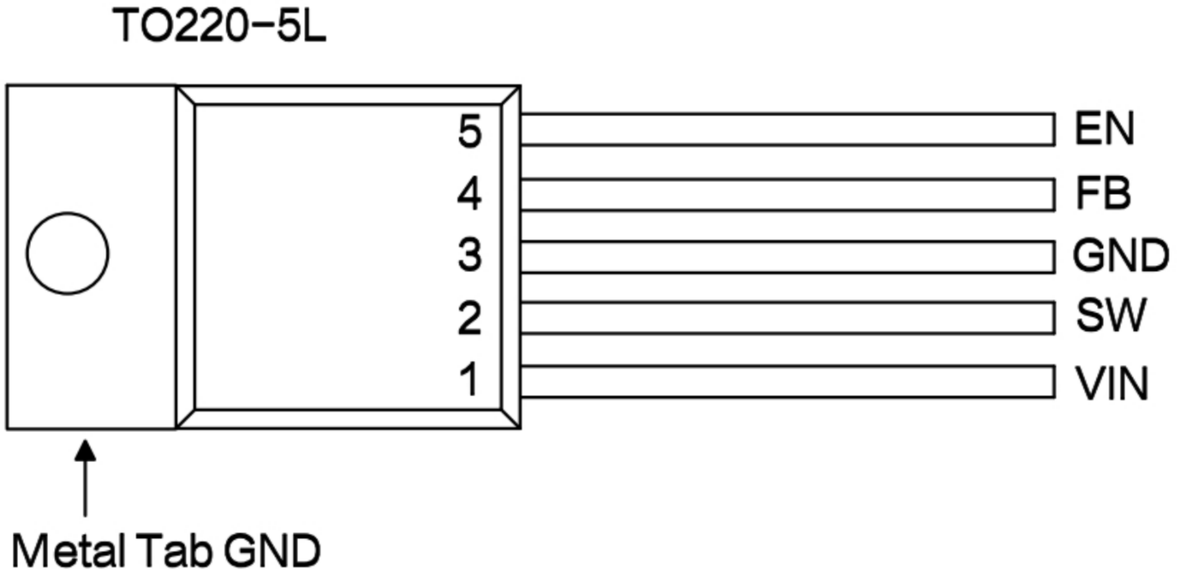

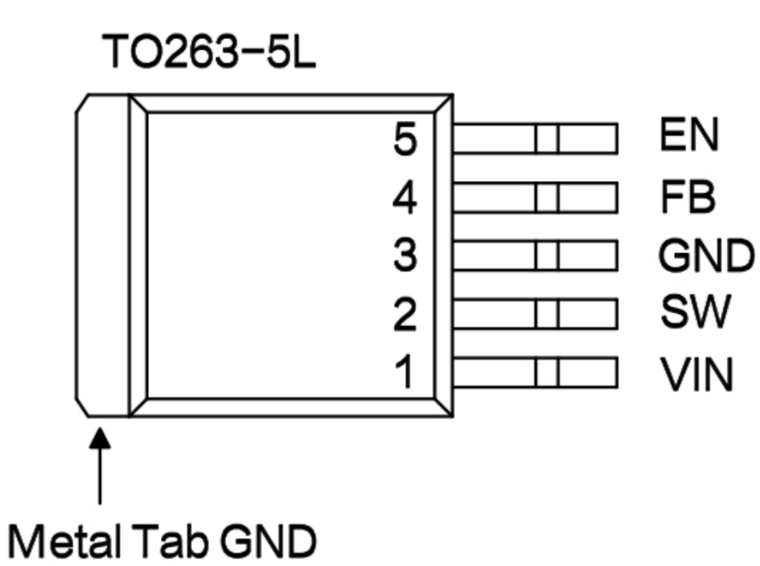

Pin Description

Pin Number	Pin Name	Description
1	VIN	Supply Voltage Input Pin. LM2596 operates from a 4.5V to 40V DC voltage. Bypass Vin to GND with a suitably largecapacitor to eliminate noise on the input.
2	SW	Power Switch Output Pin (SW). Output is the switch node that supplies power to the output.
3	GND	Ground Pin.
4	FB	Feedback Pin (FB). Through an external resistor divider network, Feedback senses the output voltage and regulates it. The feedback threshold voltage is 1.23V.
5	EN	Enable Pin. Drive EN pin low to turn on the device, drive it high to turn it off. Floating is default low.
Tab	GND	Ground Pin.

Function Block

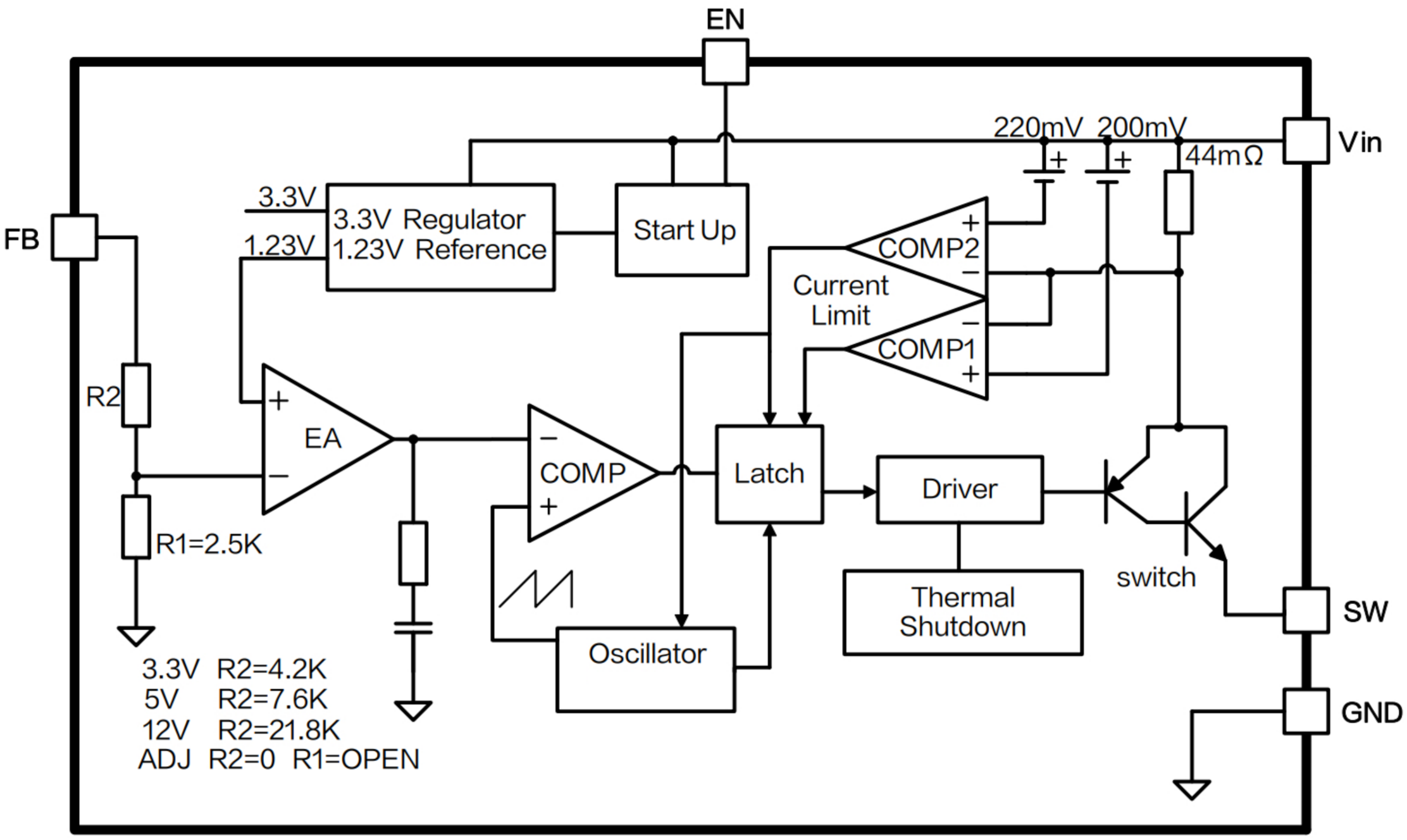

Typical Application Circuit

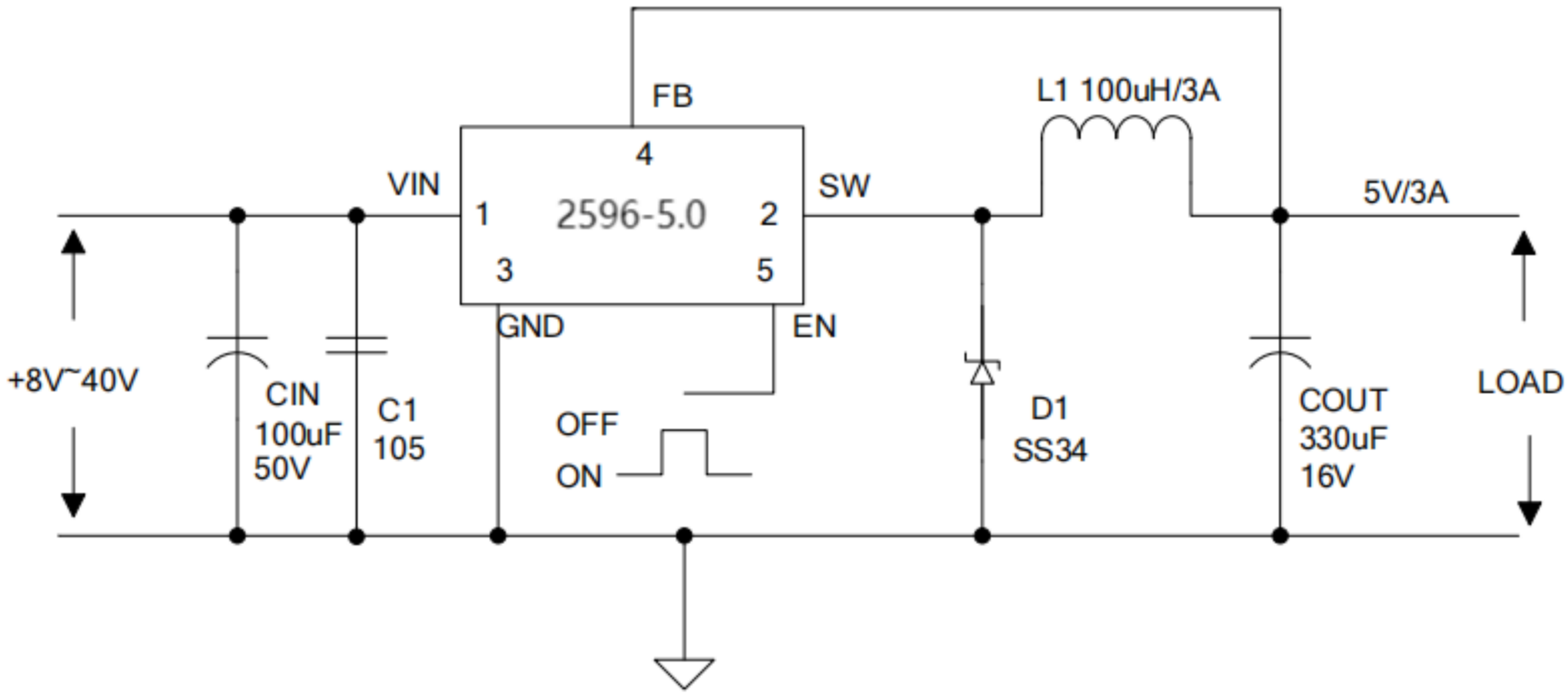

Absolute Maximum Ratings

Note1: Stresses greater than those listed under Maximum Ratings may cause permanent damage to the device. This is a stress rating only and functional operation of the device at these or any other conditions above those indicated in the operation is not implied. Exposure to absolute maximum rating conditions for extended periods may affect reliability.

Parameter	Symbol	Value	Unit
Input Voltage	V_{IN}	-0.3 to 40	V
Feedback Pin Voltage	V_{FB}	-0.3 to VIN	V
Enable Pin Voltage	V_{EN}	-0.3 to VIN	V
Switch Pin Voltage	V_{SW}	-0.3 to VIN	V
Power Dissipation	P_D	Internally limited	mW
Operating Junction Temperature	T_J	-40~125	°C
Storage Temperature	T_{STG}	-65 to 150	°C
Lead Temperature (Soldering, 10 sec)	T_{LEAD}	260	°C
ESD (HBM)		2000	V
MSL		Level3	
Thermal Resistance-Junction to Ambient	RθJA	85	°C / W
Thermal Resistance-Junction to Case	RθJC	45	°C / W

LM2596-3.3 Electrical Characteristics

Ta = 25°C;unless otherwise specified.

Symbol	Parameter	Test Condition	Min.	Typ.	Max.	Unit
VOUT	Output Voltage	Vin = 4.75V to 40V Iload=0.2Ato 3A	3.168	3.3	3.432	V
η	Efficiency	Vin=12V ,Vout=3.3V Iout=3A	-	73	-	%

LM2596-5.0 Electrical Characteristics

Ta = 25°C;unless otherwise specified.

Symbol	Parameter	Test Condition	Min.	Typ.	Max.	Unit
VOUT	Output Voltage	Vin = 7V to 40V， Iload=0.2Ato 3A	4.8	5	5.2	V
η	Efficiency	Vin=12V ,Vout=5V， Iout=3A	-	80	-	%

LM2596-12 Electrical Characteristics

Ta = 25°C;unless otherwise specified.

Symbol	Parameter	Test Condition	Min.	Typ.	Max.	Unit
VOUT	Output Voltage	Vin = 15V to 40V， Iload=0.2Ato 3A	11.52	12	12.48	V
η	Efficiency	Vin=25V ,Vout=12V， Iout=3A	-	90	-	%

LM2596-ADJ Electrical Characteristics

Ta = 25°C;unless otherwise specified.

Symbol	Parameter	Test Condition	Min.	Typ.	Max.	Unit
VOUT	Output Voltage	Vin = 4.5V to 40V, Iload=0.2Ato 3A	1.193	1.23	1.267	V
η	Efficiency	Vin=12V,Vout=3V Iout=3A	-	73	-	%

Electrical Characteristics (DC Parameters)

Vin = 12V for the 3.3V,5V,and Adjustable versions and Vin=24Vforthe 12V version, GND=0V, Vin & GND parallel connect a 220uf/50V capacitor; Iout=500mA, Ta = 25°C; the others floating unless otherwise specified.

Parameters	Symbol	Test Condition	Min.	Typ.	Max.	Unit
Input operation voltage	Vin		4.5		40	V
Shutdown Supply Current	I_S	V_{EN}=5V		50	200	uA
Quiescent Supply Current	I_q	V_{EN} =0V, V_{FB}=Vin		4.5	10	mA
Oscillator Frequency	Fosc		48	52	57	Khz
Switch Current Limit	I_L	V_{FB} =0V	3.6	4.8	6.9	A
EN Pin Threshold	V_{EN}	High (Regulator OFF) Low (Regulator ON)		1.5 0.8		V
EN Pin Input Leakage Current	I_H	V_{EN} =2.5V (OFF)		8	15	uA
	I_L	V_{EN} =0.5V (ON)		0.5	5	uA
Output Saturation Voltage	V_{CE}	V_{FB}=0V I_{out}=3A		1.5	1.8	V
Max. Duty Cycle	D_{MAX}	V_{FB}=0V		100		%

Test Circuit and Layout guidelines

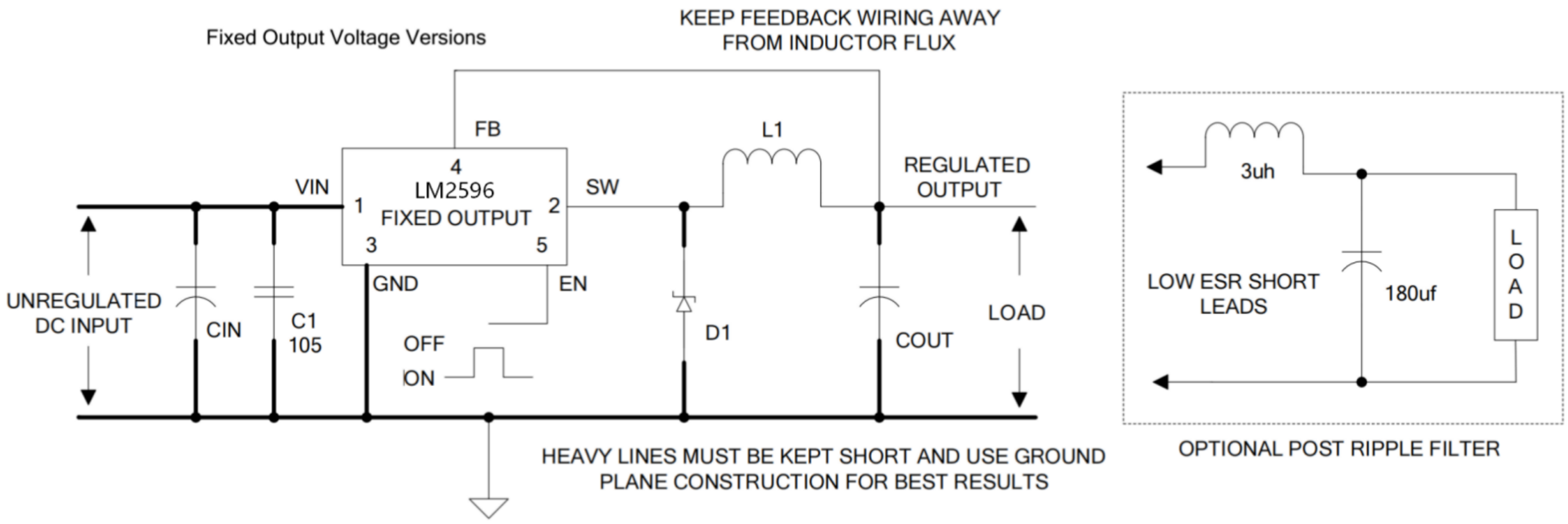

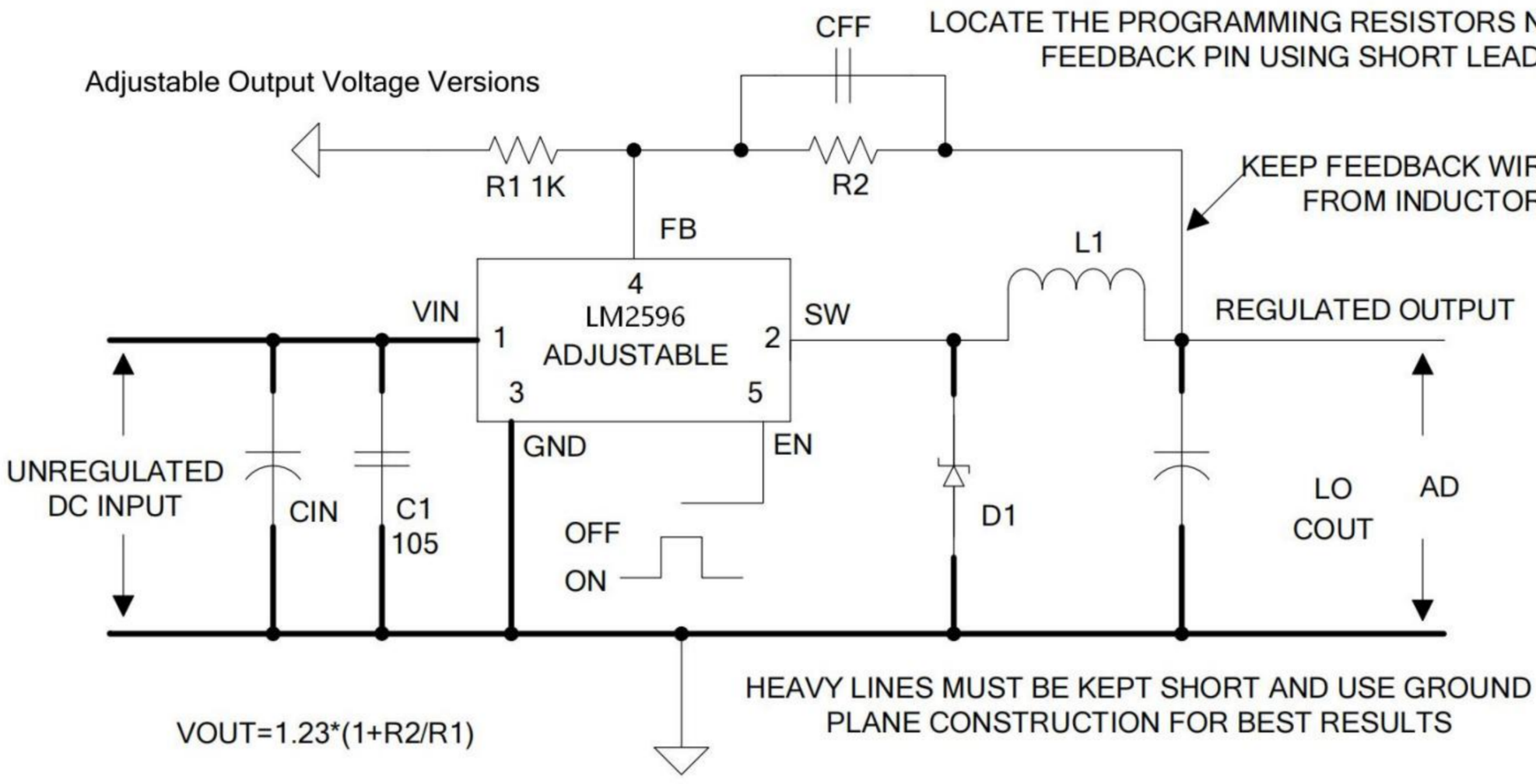

Select R1 to be approximately 1K, use a 1% resistor for best stability.

C1 and CFF are optional; in order to increase stability and reduce the input power line noise, C1 must be placed near to PIN1 and PIN3;

For output voltages greater than approximately 10V, an additional capacitor CFF is required. The compensation capacitor is typically between 100 pf and 33 nf, and is wired in parallel with the output voltage setting resistor, R2. It provides additional stability for high output voltage, low input-output voltages, and/or very low ESR output capacitors, such as solid tantalum capacitors.

CFF=1/(31*1000*R2); This capacitor type can be ceramic, plastic, silver mica, etc. (Because of the unstable characteristics of ceramic capacitors made with Z5U material, they are not recommended.)

LM2596 Series Buck Regulator Design Procedure (Fixed Output)

Conditions			Inductor (L1)	Output Capacitor (COUT)			
				Through Hole Electrolytic		Surface Mount Tantalum	
Output Voltage (V)	Load Current (A)	Max Input Voltage (V)	Inductance (uH)	Panasonic HFQ Series (uF/V)	Nichicon PL Series (uF/V)	AVX TPS Series (uF/V)	Sprague 595D Series (uF/V)
3.3	3	5	22	470/25	560/16	330/6.3	390/6.3
		7	22	560/35	560/35	330/6.3	390/6.3
		10	22	680/35	680/35	330/6.3	390/6.3
		40	33	560/35	470/35	330/6.3	390/6.3
	2	6	22	470/25	470/35	330/6.3	390/6.3
		10	33	330/35	330/35	330/6.3	390/6.3
		40	47	330/35	270/50	220/10	330/10
5	3	8	22	470/25	560/16	220/10	330/10
		10	22	560/25	560/25	220/10	330/10
		15	33	330/35	330/35	220/10	330/10
		40	47	330/35	270/35	220/10	330/10
	2	9	22	470/25	560/16	220/10	330/10
		20	68	180/35	180/35	100/10	270/10
		40	68	180/35	180/35	100/10	270/10
12	3	15	22	470/25	470/25	100/16	180/16
		18	33	330/25	330/25	100/16	180/16
		30	68	180/25	180/25	100/16	120/20
		40	68	180/35	180/25	100/16	120/20
	2	15	33	330/25	330/25	100/16	180/16
		20	68	180/25	180/25	100/16	120/20
		40	150	82/25	82/25	68/20	68/25

LM2596 Series Buck Regulator Design Procedure (Adjustable Output)

Output Voltage (V)	Through Hole Output Electrolytic			Surface Mount Output Capacitor		
	Panasonic HFQ Series (uF/V)	Nichicon PL Series (uF/V)	Feedforward Capacitor	AVX TPS Series (uF/V)	Sprague 595D Series (uF/V)	Feedforward Capacitor
2	820/35	820/35	33nF	330/6.3	470/4	33nF
4	560/35	470/35	10nF	330/6.3	390/6.3	10nF
6	470/25	470/35	3.3nF	220/10	330/10	3.3nF
9	330/25	330/25	1.5nF	100/16	180/16	1.5nF
12	330/25	330/25	1nF	100/16	180/16	1nF
15	220/25	220/35	680pF	68/20	120/20	680pF
24	220/35	150/35	560pF	33/25	33/25	220pF
28	100/50	100/50	390pF	10/35	15/50	220pF

Schottky Diode Selection Table

Current	Surface Mount	Through Hole	VR (The same as system maximum input voltage)				
			20V	30V	40V	50V	60V
1A		√	1N5817	1N5818	1N5819		
3A		√	1N5820	1N5821	1N5822		
		√	MBR320	MBR330	MBR340	MBR350	MBR360
	√		SK32	SK33	SK34	SK35	SK36
	√			30WQ03	30WQ04	30WQ05	
		√		31DQ03	31DQ04	31DQ05	
		√	SR302	SR303	SR304	SR305	SR306
5A		√	1N5823	1N5824	1N5825		
		√	SR502	SR503	SR504	SR505	SR506
		√	SB520	SB530	SB540	SB550	SB560
	√			50WQ03	50WQ04	50WQ05	

Typical System Application for 3.3V Version

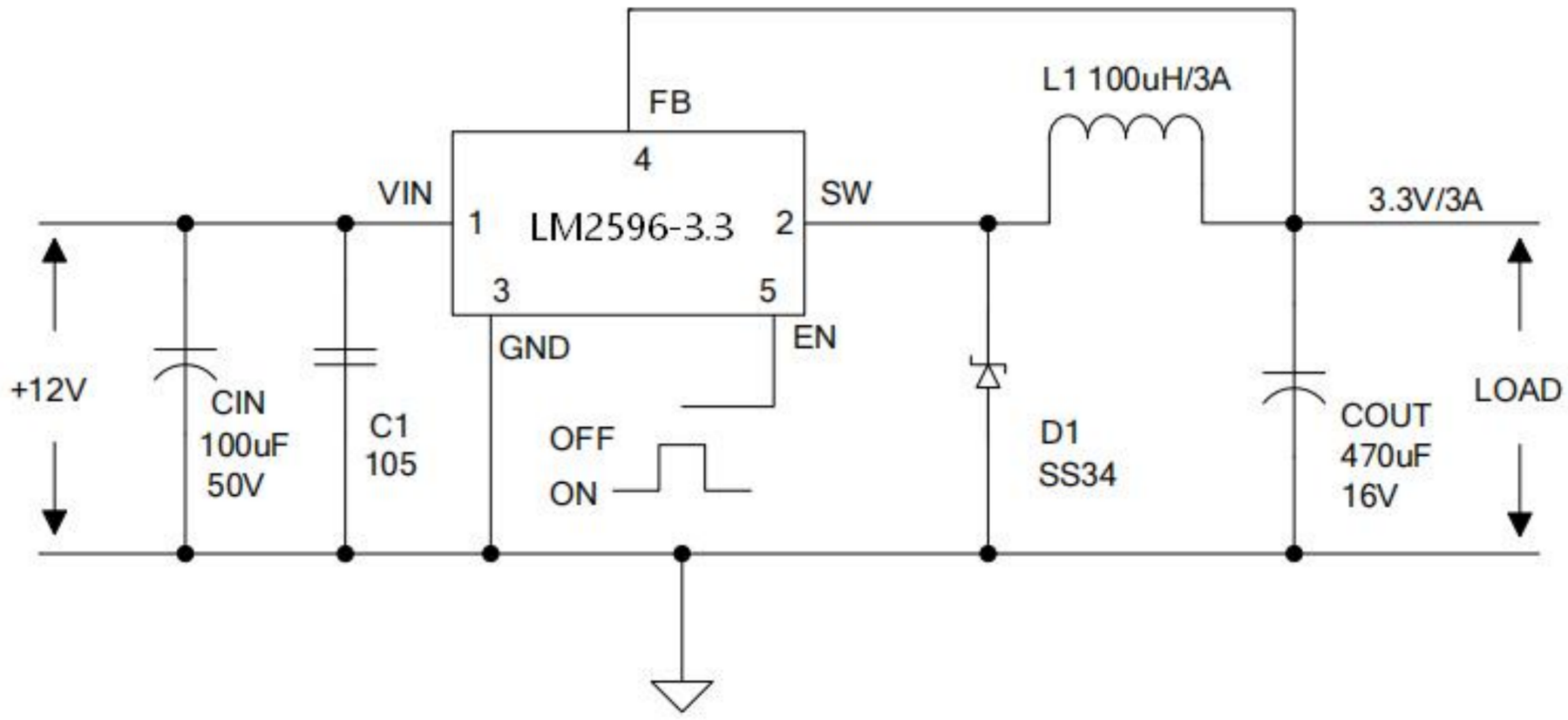

Typical System Application for 5V Version

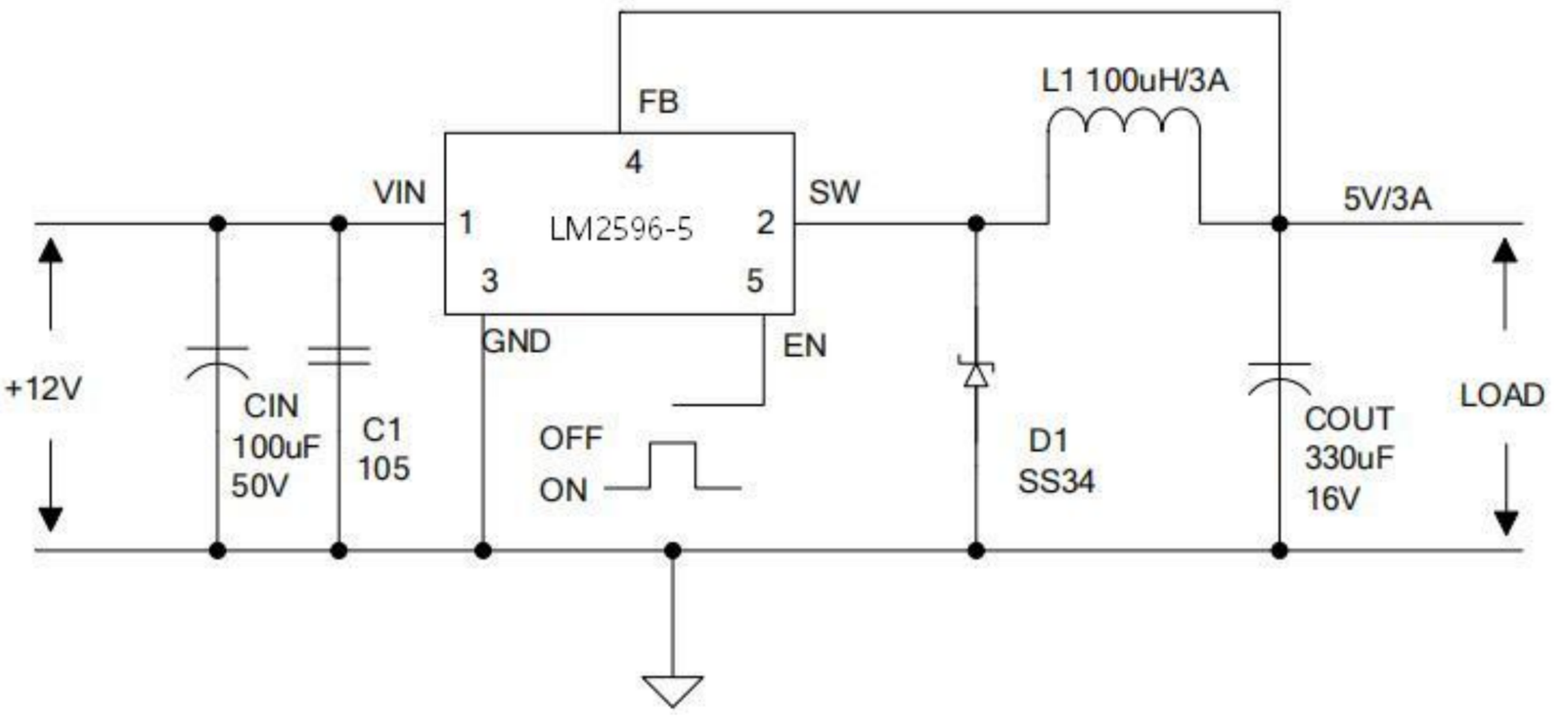

Typical System Application for 12V Version

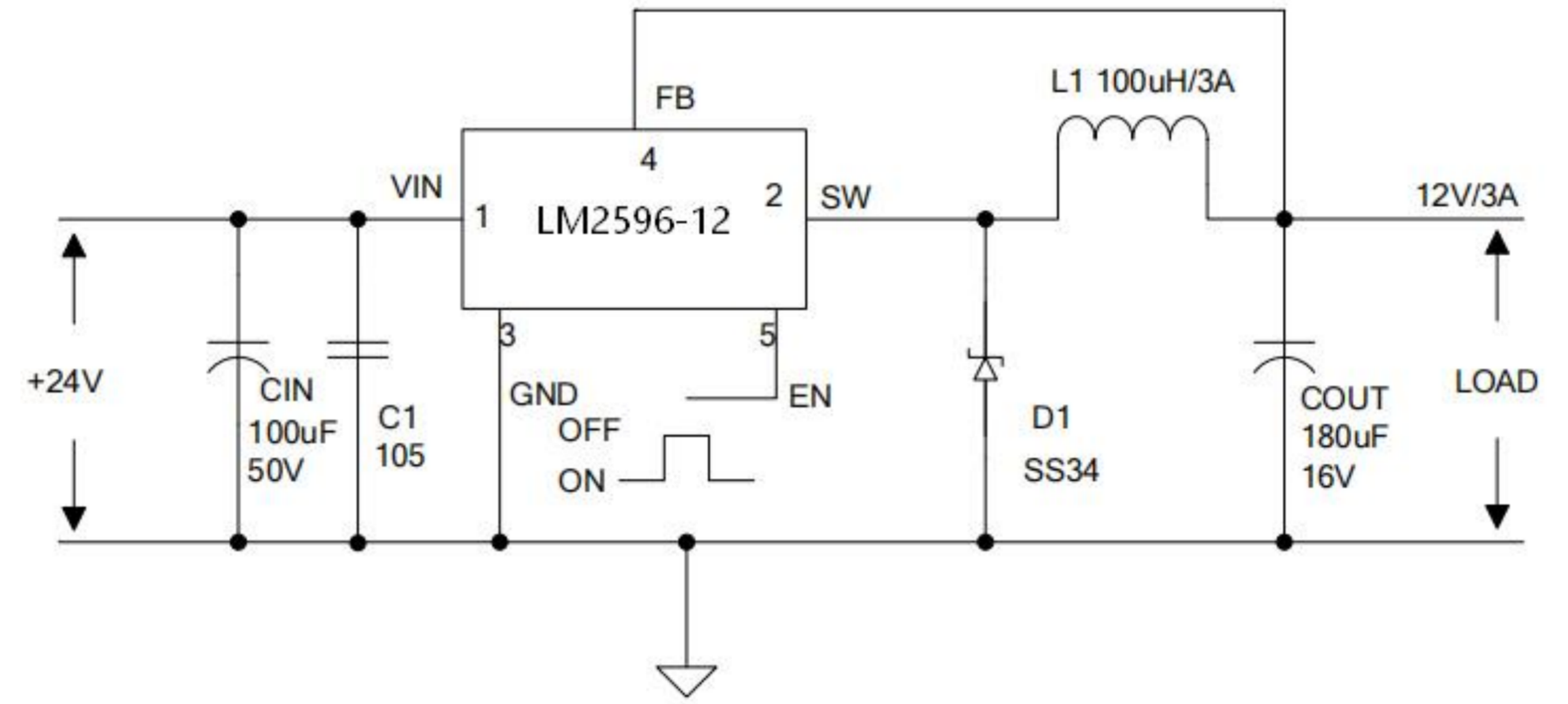

Typical System Application for ADJ Version

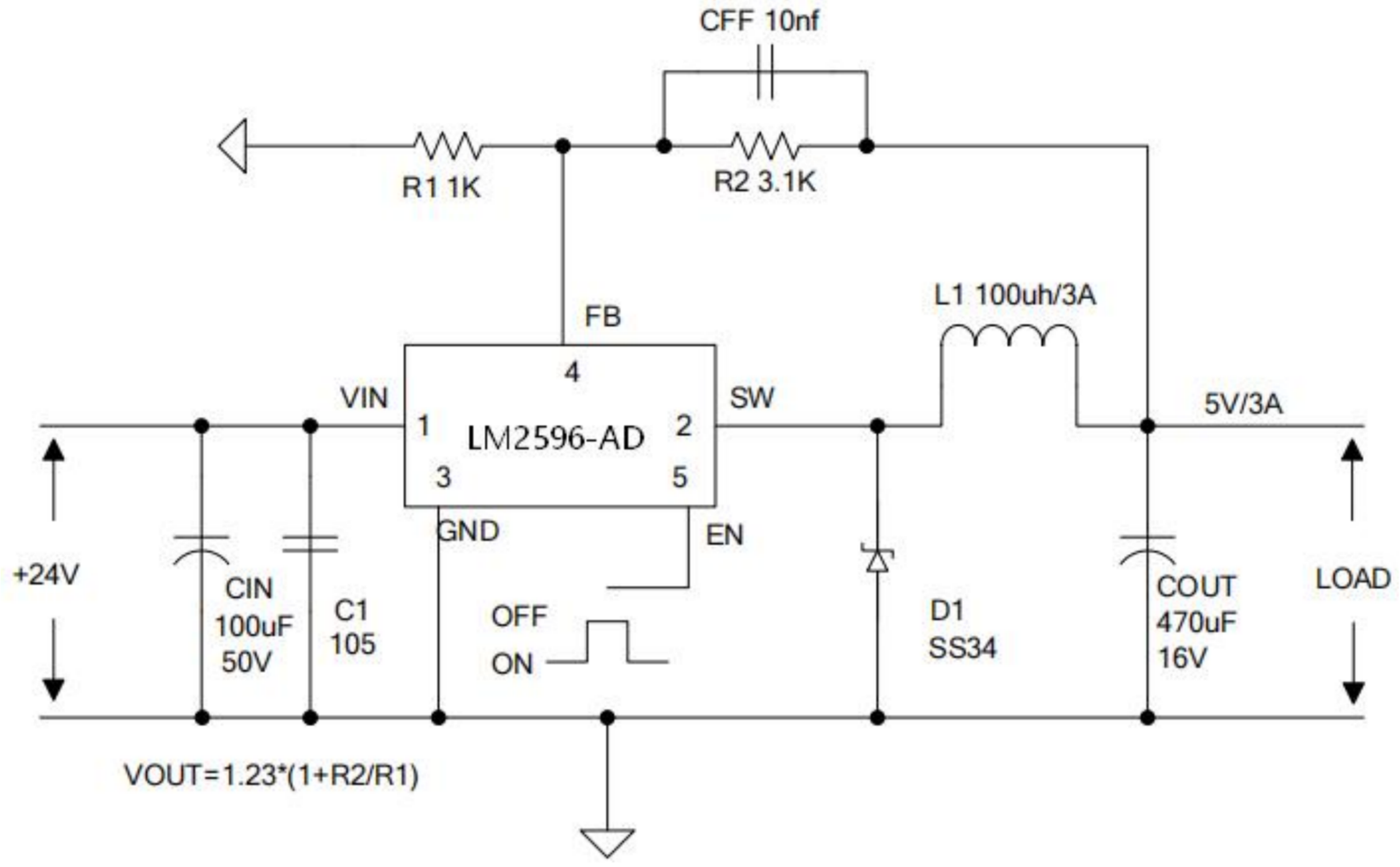

High Power Application Circuit

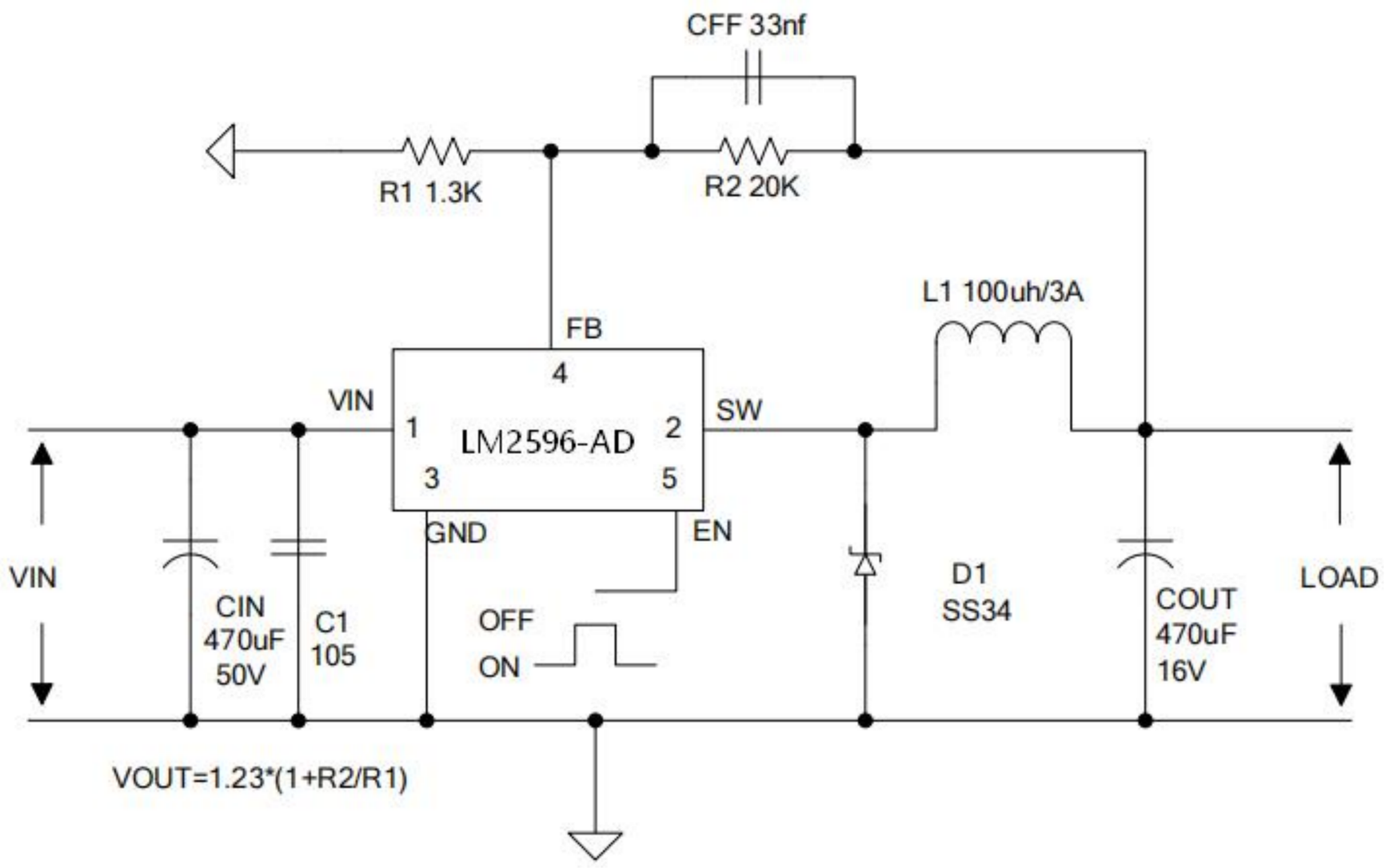

Outline Dimensions

TO-263-5

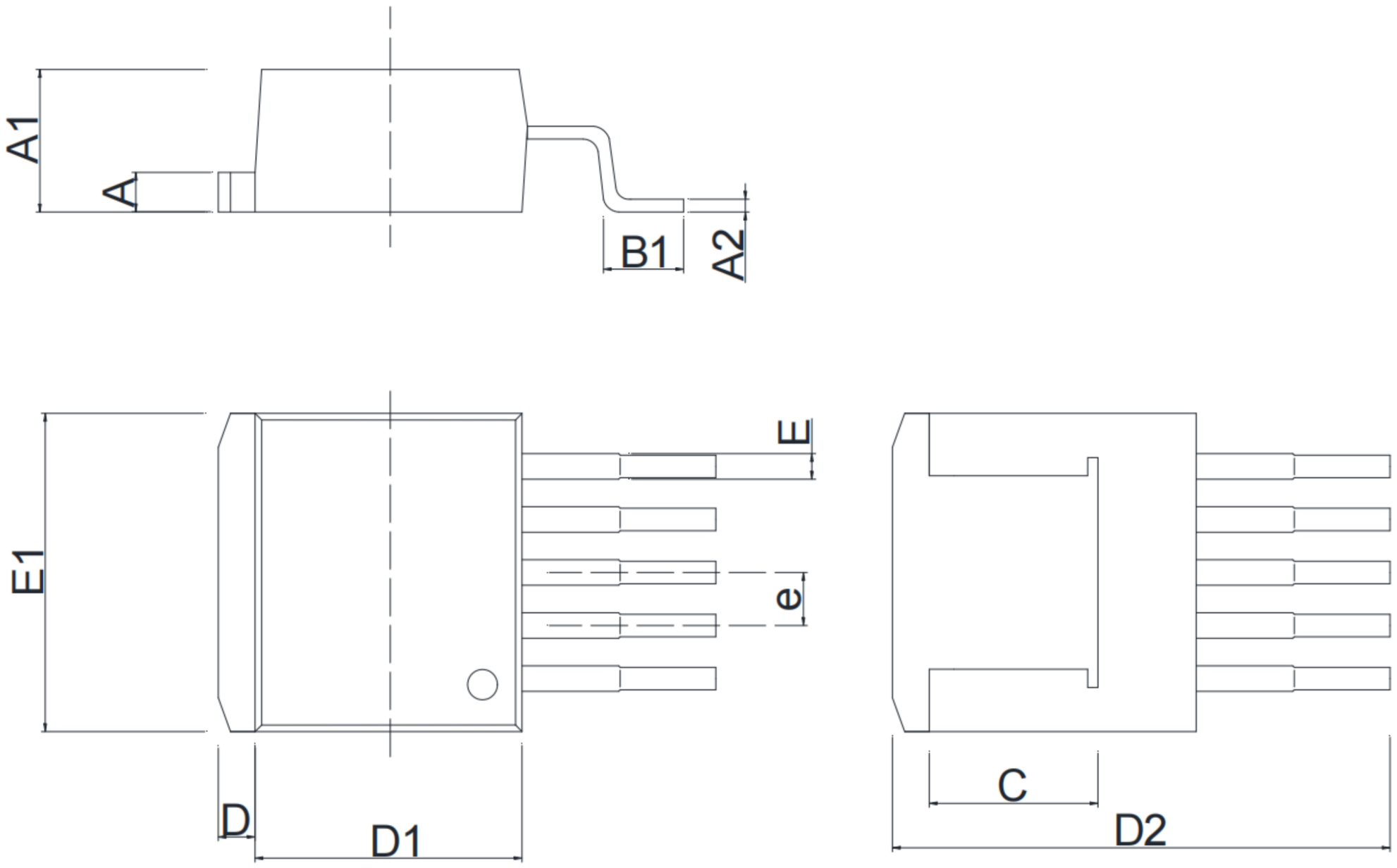

Symbol	Dimensions In Millimeters		Dimensions In Inches	
	Min	Max	Min	Max
A	1.170	1.370	0.046	0.054
A1	4.470	4.670	0.176	0.184
A2	0.310	0.530	0.012	0.021
B1	2.340	2.740	0.092	0.108
C	5.080 REF		0.200 REF	
D	1.170	1.370	0.046	0.054
D1	8.500	8.900	0.335	0.350
D2	14.550	15.550	0.572	0.612
E	0.660	0.860	0.025	0.034
E1	10.010	10.310	0.394	0.406
e	1.700（BSC）		0.067（BSC）	

TO-220-5

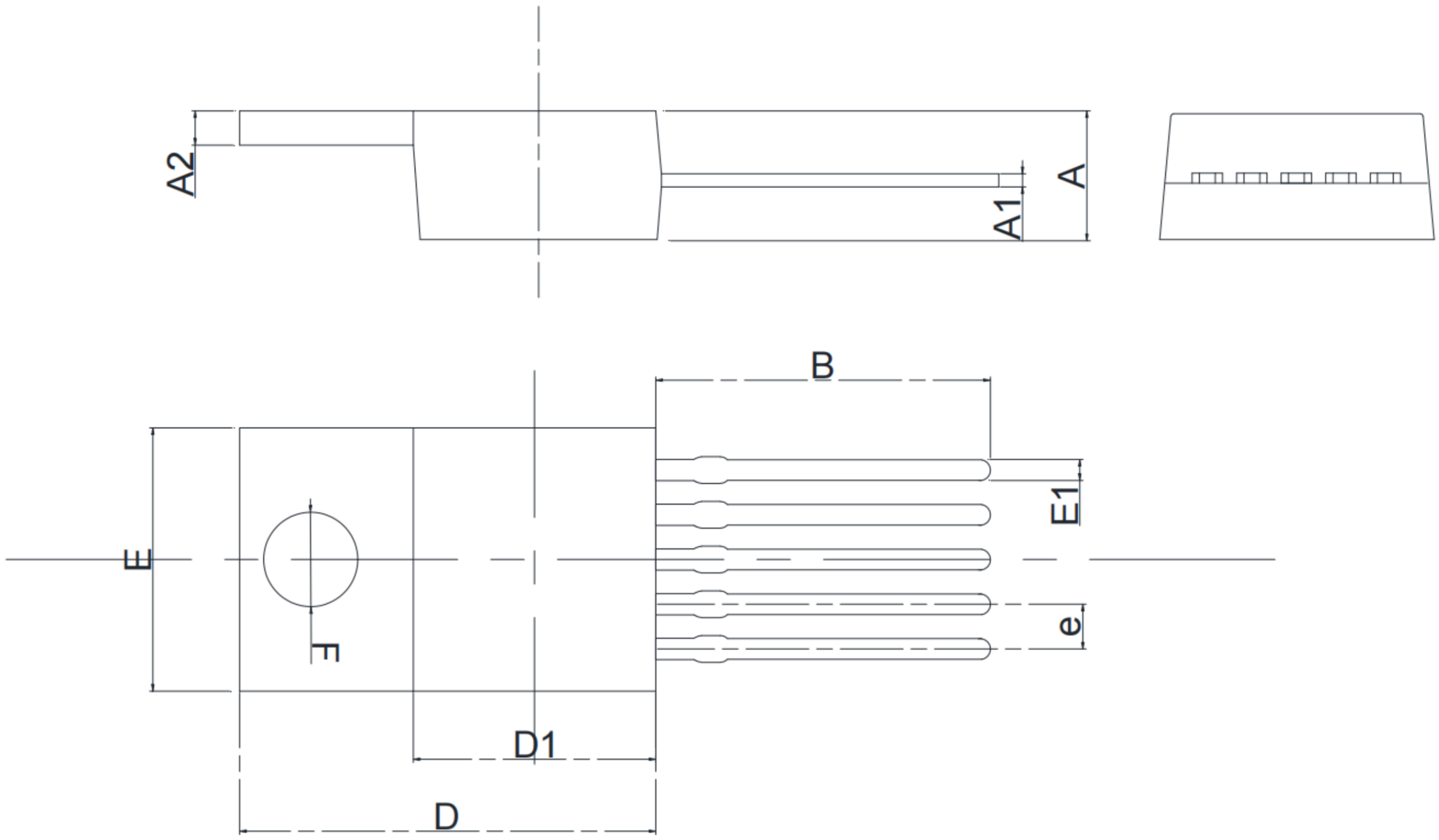

Symbol	Dimensions In Millimeters		Dimensions In Inches	
	Min	Max	Min	Max
A	4.300	4.700	0.169	0.185
A1	0.450	0.600	0.017	0.023
A2	1.250	1.400	0.049	0.055
B	12.880	13.380	0.507	0.527
D	15.500	15.900	0.610	0.626
D1	9.000	9.400	0.354	0.370
E	9.700	10.100	0.381	0.398
E1	0.660	0.914	0.025	0.036
e	1.702（BSC）		0.670（BSC）	
F	Φ3.500	Φ3.700	Φ0.137	Φ0.146

Important Notice

- Green Micro chip reserves the right to change products and documents without notice. Customers should obtain and verify the completeness of the latest technical information before placing orders. Meanwhile, Green Micro chip shall not assume any responsibility or obligation for non-officially revised documents.

- Any parameters in the entire product specification are for reference only, and actual application testing shall prevail. When customers use the products for system design, they must comply with safety regulations and independently assume the following responsibilities: selecting suitable Green Micro chip products according to application requirements; completing design verification and full-link testing of the application; and ensuring that the application complies with safety regulations or other requirements of the target market. Customers shall bear all personal or property losses caused by design defects or illegal operations, which shall have no relation to Green Micro chip.

- Green Micro chip products are prohibited from being used in scenarios such as life support, military equipment, and key aerospace applications. All accidents and legal liabilities arising from out-of-scope use shall be borne by the user, and Green Micro chip shall not be held responsible.

- All technical resources of Green Micro chip (including data sheets and reference designs) are provided "as is", without guarantee of no defects or universality, and without any express or implied warranties. The documents are only authorized for product development and research described in this document. Unauthorized use of intellectual property, public reproduction, and reverse engineering are strictly prohibited. All claims and losses caused by illegal use shall be borne by the user, and Green Micro chip shall not be liable.