AT24C16

DATASHEET

Specification Revision History:

Version	Date	Description
V1.0	2020/08	New
V1.1	2021/06	Modify Ordering Information
V1.2	2023/02	Modify Ordering Information
V1.3	2025/05	Add application precautions and overall typesetting.

Features

※ Two-Wire Serial Interface,I^2C^{TM} Compatible

— Bi-directional data transfer protocol

※ Wide-voltage Operation

— Vcc=1.7V to 5.5V

※ Speed: 1 MHz(1.7V~5.5V)

※ Standby current(max.):1μA, 5.5V

※ Operating current (max.):1.5 mA, 5.5V

※ Sequential &Random Read Features

※ Memory organization:16Kb(2048x 8)

※ Page Size: 16 bytes

※ Page write mode

— Partial page writes allowed

— Addition write lockable page

— Identification Page

※ Self-timed write cycle:5 ms(max.)

※ Endurance:

— 1 million Write cycles at 25°C

※ Data retention

— 100 years at 25°C

※ Packages:SOIC,TSSOP,UDFN and SOT23

※ ESD Protection > 4000V

※ Lead-free,RoHS,Halogen free,Green

※ Noise immunity on inputs,besides Schmitt trigger

General Description

The 24C16 is a 16-Kbit electrically erasable programmable read only memory (EEPROM) device operating up to 85 °C. The 24C16 contains a memory array of 16K bits (2,048x8), which is organized in 16-byte per page.

The EEPROM operates in a wide voltage range from 1.7V to 5.5V running up to 1MHz, which fits most application.

The product provides low-power operations and low standby current. The device is offered in Lead-free, RoHS, halogen free or Green package. The available package types are 8-pin SOIC, TSSOP, UDFN and SOT23.

The 24C16 is compatible to the standard I2C bus protocol. The simple bus consists of Serial Clock (SCL) and Serial Data (SDA) signals. Utilizing such bus protocol, a Master device, such as a microcontroller, can usually control one or more Slave devices, alike this 24C16. The bit stream over the SDA line includes a series of bytes, which identifies a particular Slave device, an instruction, an address within that Slave device, and a series of data, if appropriate. The 24C16 also has a Write Protect function via WP pin to cease from overwriting the data stored inside the memory array.

In order to refrain the state machine from entering into a wrong state during power-up sequence or a power toggle off-on condition, a power on reset circuit is embedded. During power-up, the device does not respond to any instructions until the supply voltage (V_{CC}) has reached an acceptable stable level above the reset threshold voltage. Once V_{CC} passes the power on reset threshold, the device is reset and enters into the Standby mode. This would also avoid any inadvertent Write operations during power-up stage. During power-down process, the device will enter into standby mode, once V_{CC} drops below the power on reset threshold voltage. In addition, the device will be in standby mode after receiving the Stop command, provided that no internal write operation is in progress. Nevertheless, it is illegal to send a command unless the V_{CC} is within its operating level.

This product optionally offers an additional page (Identification Page) of 16 bytes. The Identification Page can be used o store sensitive application parameters which can be (later) permanently locked in Read-only mode.

The appearance of the product

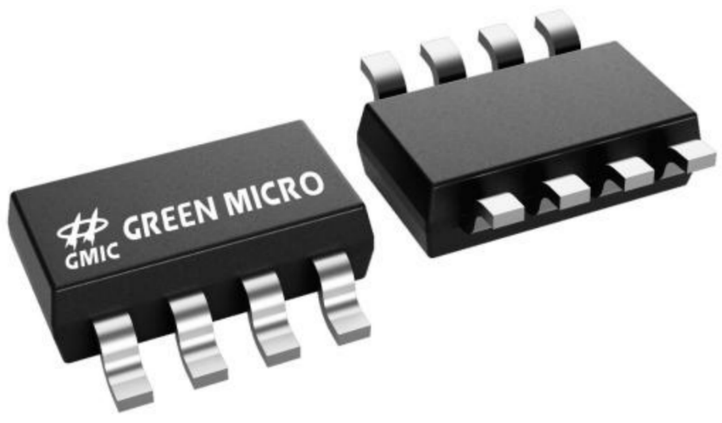

SOP-8

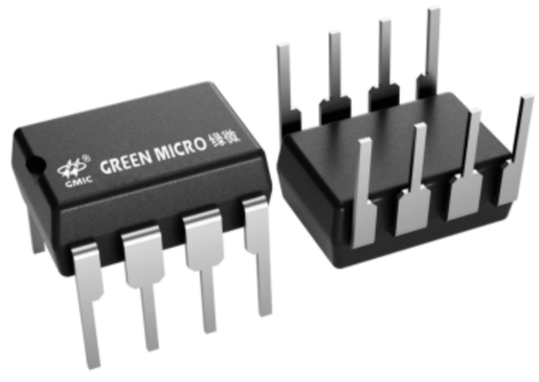

DIP-8

Ordering Information

Product Model	Package Type	Packing	Packing Qty
AT24C16BS	SOP-8	REEL	4000PCS/REEL
AT24C16BD	DIP-8	TUBE	2000PCS/BOX
AT24C16N	SOP-8	REEL	4000PCS/REEL

Functional Block Diagram

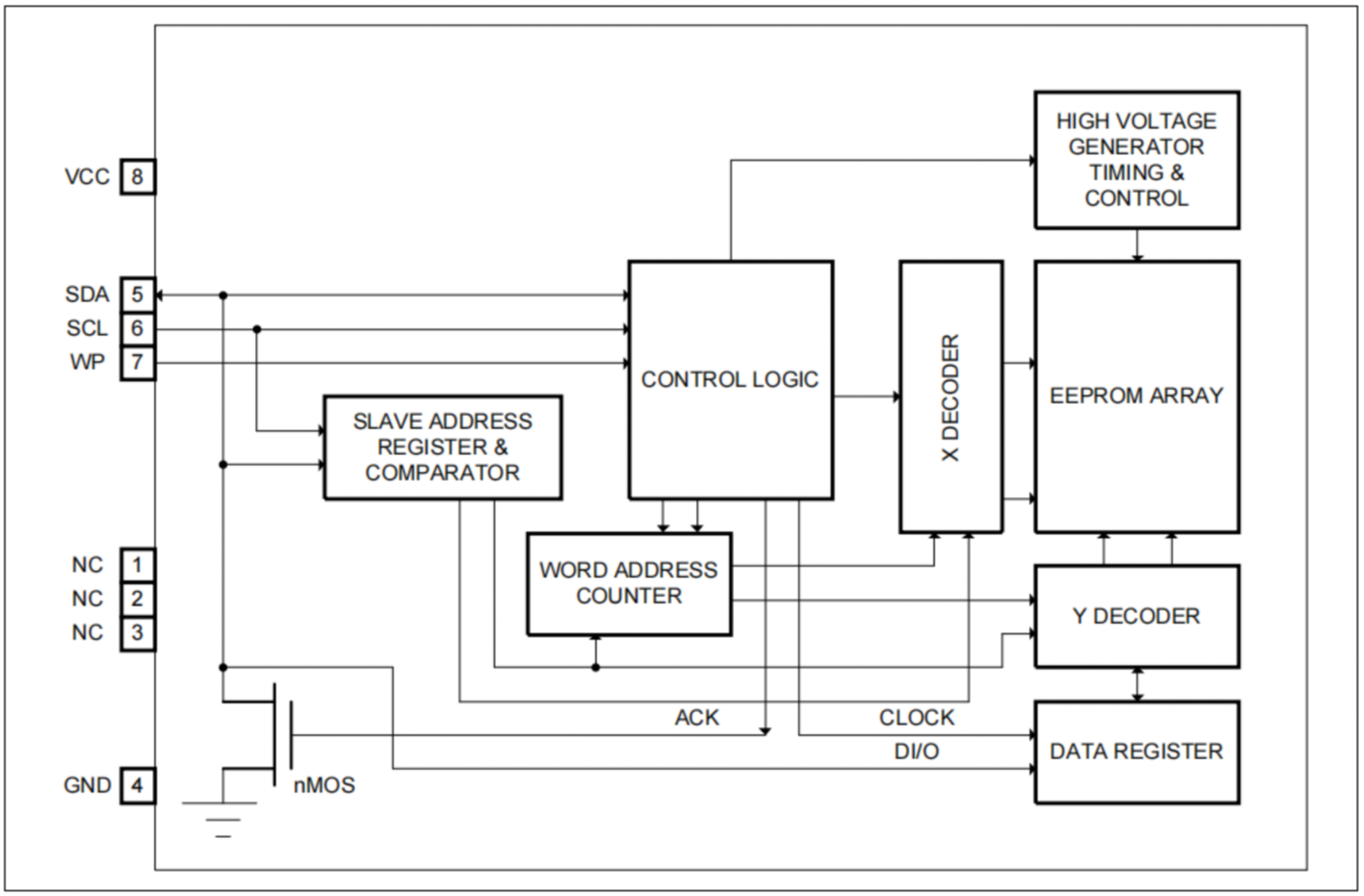

Pin Configuration

Pin SOP, TSSOP

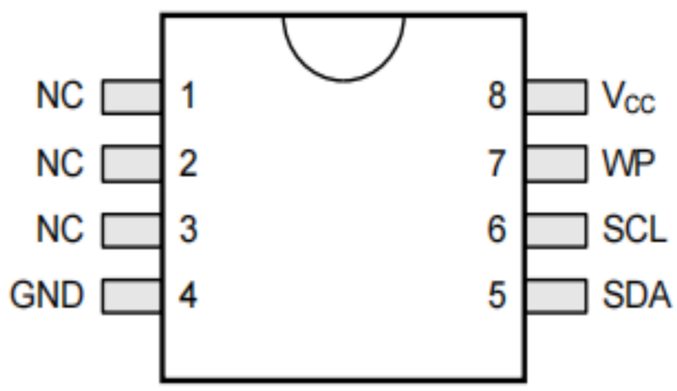

Lead SOT23

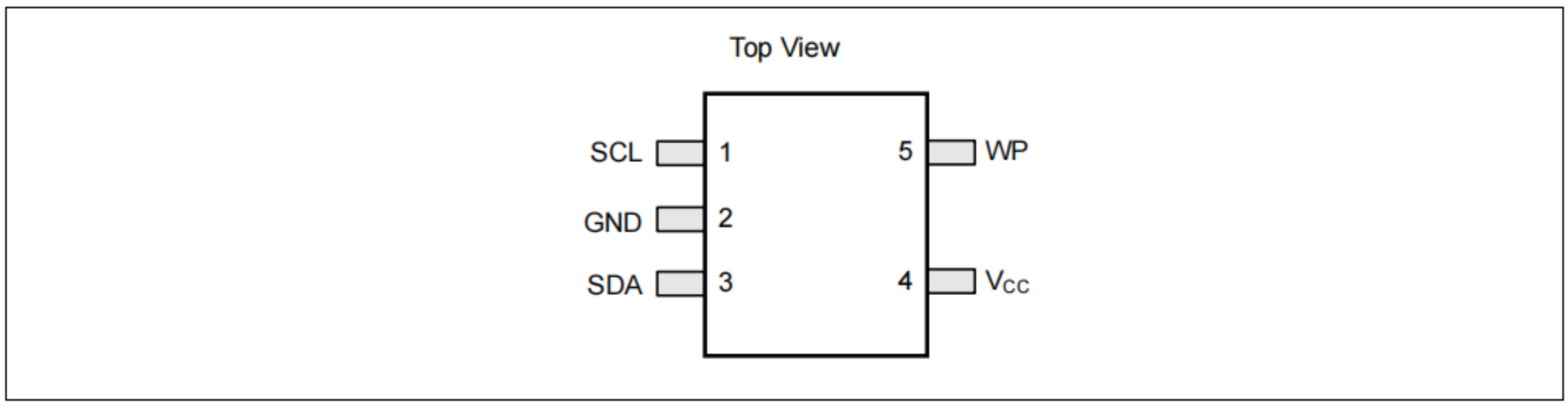

Pin Definition

Pin No.	Pin Name	I/O	Definition
1	NC	-	No Connect
2	NC	-	No Connect
3	NC	-	No Connect
4	GND	-	Ground
5	SDA	I/O	Serial Address, Data input and Data output
6	SCL	I	Serial Clock Input
7	WP	I	Write Protect Input
8	VCC	-	Power Supply

Pin Descriptions

SCL

This input clock pin is used to synchronize the data transfer to and from the device.

SDA

The SDA is a bi-directional pin used to transfer addresses and data into and out of the device. The SDA pin is an open drain output and can be wired with other open drain or open collector outputs. However, the SDA pin requires a pull-up resistor connected to the power supply.

WP

WP is the Write Protect pin. While the WP pin is connected to the power supply of 24C16, the entire array becomes Write Protected (i.e. the device becomes Read only). When WP is tied to Ground or left floating, the normal write operations are allowed.

VCC

Supply voltage

GND

Ground of supply voltage

Device Operation

The 24C16 serial interface supports communications using the standard 2-wire bus protocol, such as I^2C.

2-WIRE Bus

The two-wire bus is defined as Serial Data (SDA), and Serial Clock (SCL). The protocol defines any device that sends data onto the SDA bus as a transmitter, and the receiving devices as receivers. The bus is controlled by Master device that generates the SCL, controls the bus access, and generates the Start and Stop conditions. The 24C16 is the Slave device.

Figure 1. Typical System Bus Configuration

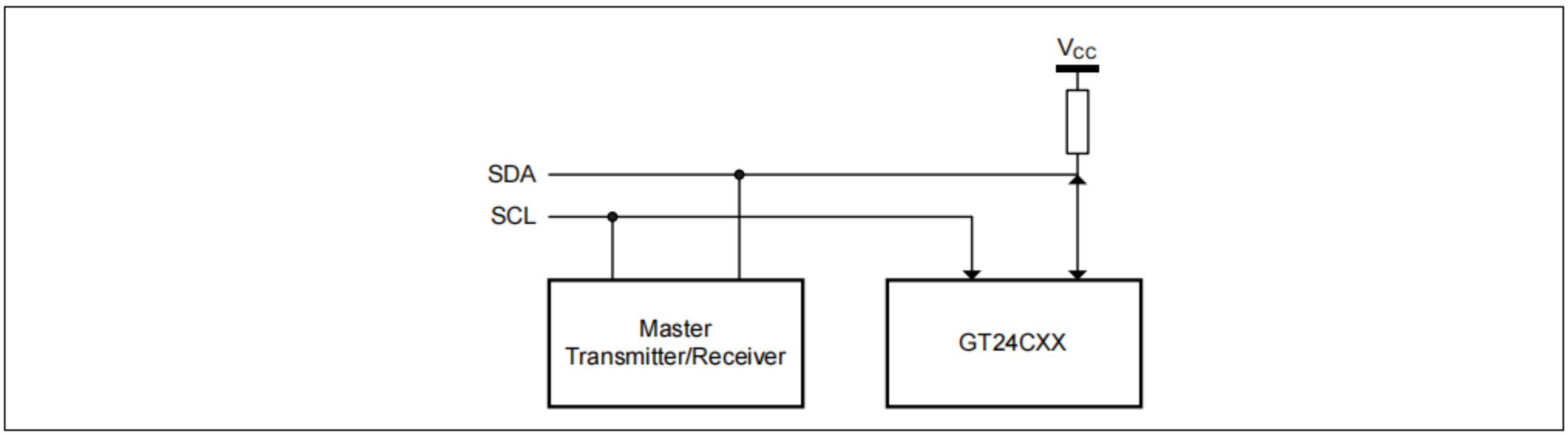

The Bus Protocol

Data transfer may be initiated only when the bus is not busy. During a data transfer, the SDA line must remain stable whenever the SCL line is high. Any changes in the SDA line while the SCL line is high will be interpreted as a Start or Stop condition.

The state of the SDA line represents valid data after a Start condition. The SDA line must be stable for the duration of the High period of the clock signal. The data on the SDA line may be changed during the Low period of the clock signal. There is one clock pulse per bit of data. Each data transfer is initiated with a Start condition and terminated by a Stop condition.

Figure 2. Data Validity Protocol

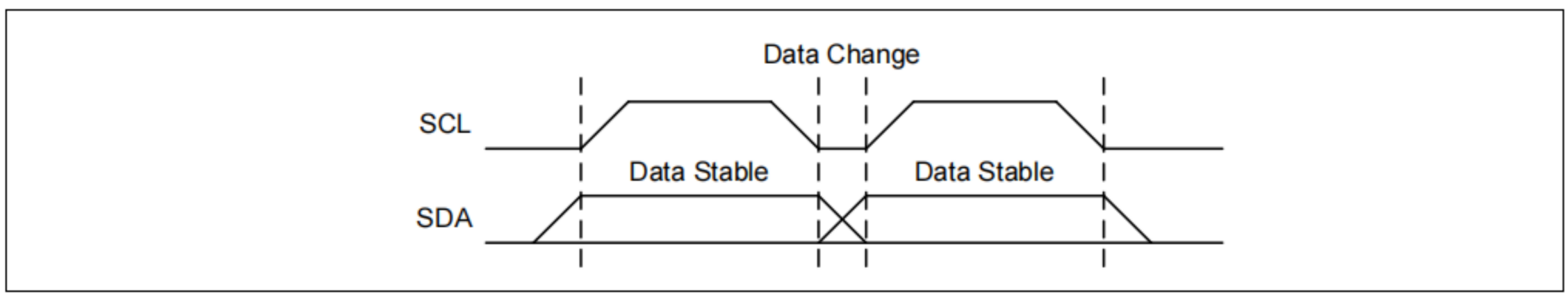

Start Condition

The Start condition precedes all commands to the device and is defined as a High to Low transition of SDA when SCL is High. The EEPROM monitors the SDA and SCL lines and will not respond until the Start condition is met.

Stop Condition

The Stop condition is defined as a Low to High transition of SDA when SCL is High. All operations must end with a Stop condition.

Figure 3. Start and Stop Conditions

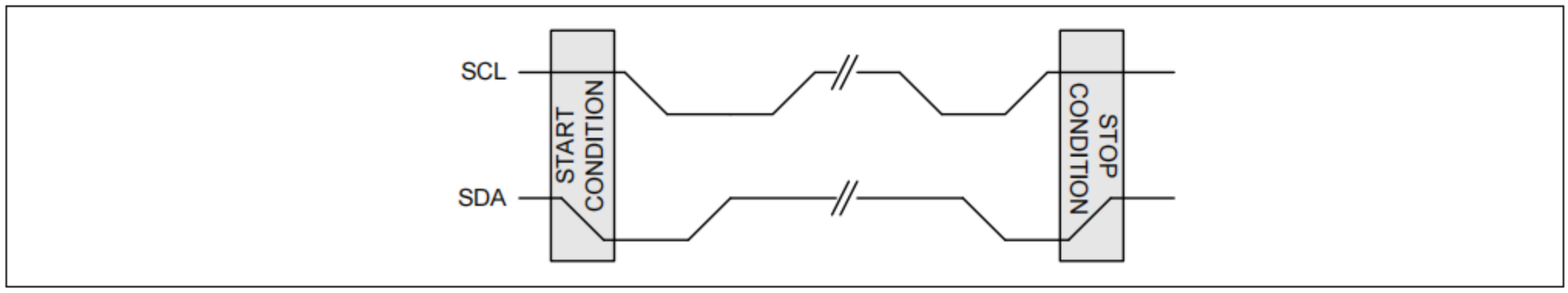

Acknowledge

After a successful data transfer, each receiving device is required to generate an ACK. The Acknowledging device pulls down the SDA line.

Figure 4. Output Acknowledge

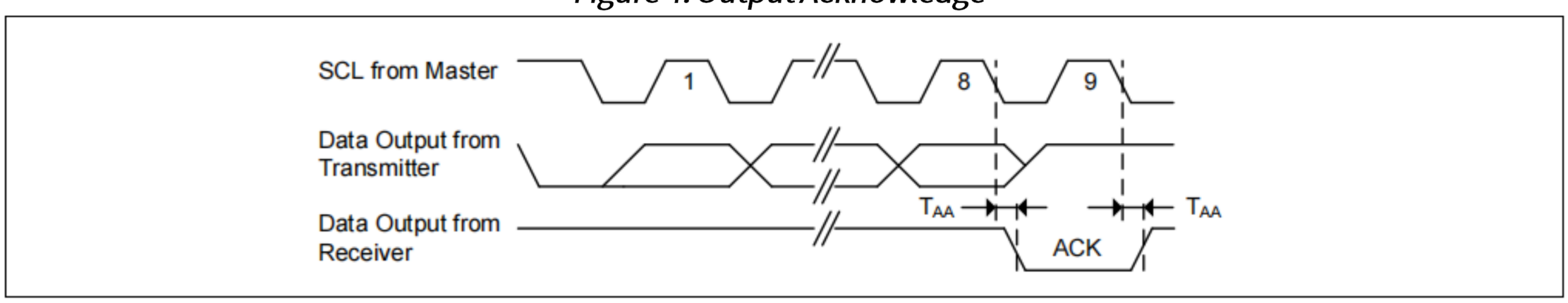

Reset

The 24C16 contains a reset function in case the 2-wire bus transmission on is accidentally interrupted (e.g. a power loss), or needs to be terminated mid-stream. The reset is initiated when the Master device creates a Start condition. To do this, it may be necessary for the Master device to monitor the SDA line while cycling the SCL up to nine times. (For each clock signal transition to High, the Master checks for a High level on SDA.) In the event that the device is still non-responsive or remains active on the SDA bus, a power cycle must be used to reset the device.

Standby Mode

While in standby mode, the power consumption is minimal. The 24C16 enters into standby mode during one of the following conditions: a) After Power-up, while no Op-code is sent; b) After the completion of an operation and followed by the Stop signal, provided that the previous operation is not Write related; or c) After the completion of any internal write operations.

Device Addressing

The Master begins a transmission on by sending a Start condition, then sends the address of the particular Slave devices to be communicated. The Slave device address is 8 bits format as shown in Figure. 5.

The four most significant bits of the Slave address are fixed (1010) for 24C16.

The 24C16 utilizes bits B2, B1 and B0 to address one of the eight 256-byte blocks in the device. Only one 24C16H unit can be connected onto the same 2-wire bus.

The last bit of the Slave address specifies whether a Read or Write operation is to be performed. When this bit is set to 1, Read operation is selected. While it is set to 0, Write operation is selected.

After the Master transmits the Start condition and Slave address byte appropriately, the associated 2-wire Slave device,24C16, will respond with ACK on the SDA line. Then 24C16 will pull down the SDA on the ninth clock cycle, signaling that it received the eight bits of data.

The 24C16 then prepares for a Read or Write operation by monitoring the bus.

Figure 5. Device Address

Bit	7	6	5	4	3	2	1	0
Main Array	1	0	1	0	B2	B1	B0	R/$\overline{W}$
ID Page	1	0	1	1	X	X	X	R/$\overline{W}$

Note: ID page is optional for different part number.

Write Operation

Byte Write

In the Byte Write mode, the Master device sends the Start condition and the Device address information (with the R/W set to Zero) to the Slave device. After the Device generates an ACK, the Master sends the byte address that is to be written into the address pointer of the 24C16. After receiving another ACK from the Device, the Master device transmits the data byte to be written into the address memory location. The 24C16 acknowledges once more and the Master generates the Stop condition, at which time the device begins its internal programming cycle. While this internal cycle is in progress, the device will not respond to any request from the Master device. (Refer to Figure 6. Byte Write Diagram)

Figure 6. Byte Write

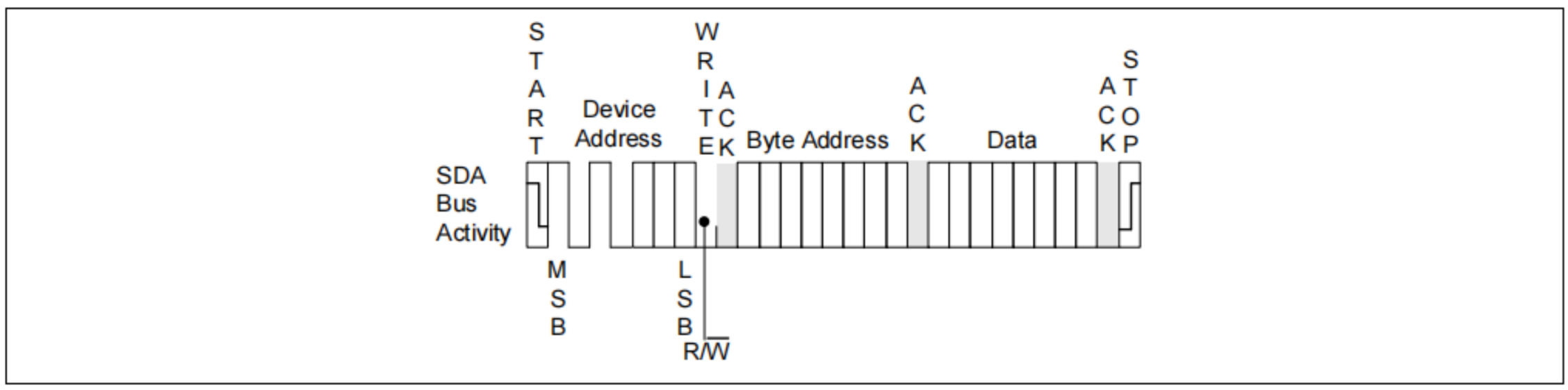

Page Write

The 24C16 is capable of 16-byte Page-Write operation. A Page-Write is initiated in the same manner as a Byte Write, but instead of terminating the internal Write cycle after the first data word is transferred, the Master device can transmit up to 15 more bytes. After the receipt of each data word, the EEPROM responds immediately with an ACK on SDA line, and the four lower order data word address bits are internally incremented by one, while the higher order bits of the data word address remain constant. If a byte address is incremented from the last byte of a page, it returns to the first byte of that page. If the Master device should transmit more than 16 bytes prior to issuing the Stop condition, the address counter will “roll over,” and the previously written data will be overwritten. Once all 16 bytes are received and the Stop condition has been sent by the Master, the internal programming cycle begins. At this point, all received data is written to the 24C16 in a single Write cycle. All inputs are disabled until completion of the internal Write cycle. (Refer to Figure 7. Page Write Diagram)

Figure 7. Page Write

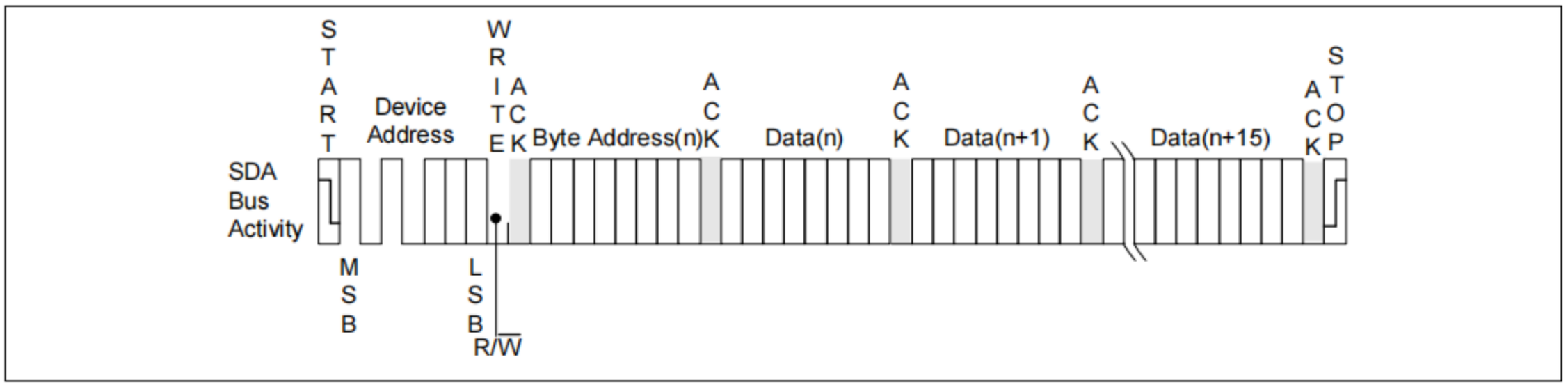

Acknowledge (ACK) Polling

The disabling of the inputs can be used to take advantage of the typical Write cycle time. Once the Stop condition is issued to indicate the end of the host's Write operation, the 24C16 initiates the internal Write cycle. ACK polling can be initiated immediately. This involves issuing the Start condition followed by the Device address for a Write operation. If the EEPROM is still busy with the Write operation, no ACK will be returned. If the 24C16 has completed the Write operation, an ACK will be returned and the host can then proceed with the next Read or Write operation.

Read Operation

Read operations are initiated in the same manner as Write operations, except that the (R/W) bit of the Device address is set to “1”. There are three Read operation options: current address read, random address read and sequential read.

Current Address Read

The 24C16 contains an internal address counter which maintains the address of the last byte accessed, incremented by one. For example, if the previous operation is either a Read or Write operation addressed to the address location n, the internal address counter would increment to address location n+1. When the EEPROM receives the Device Addressing Byte with a Read operation (R/W bit set to “1”), it will respond an ACK and transmit the 8-bit data byte stored at address location n+1. The Master should not acknowledge the transfer but should generate a Stop condition so the 24C16 discontinues transmission. If 'n' is the last byte of the memory, the data from location '0' will be transmitted. (Refer to Figure 8. Current Address Read Diagram.)

Figure 8. Current Address Read

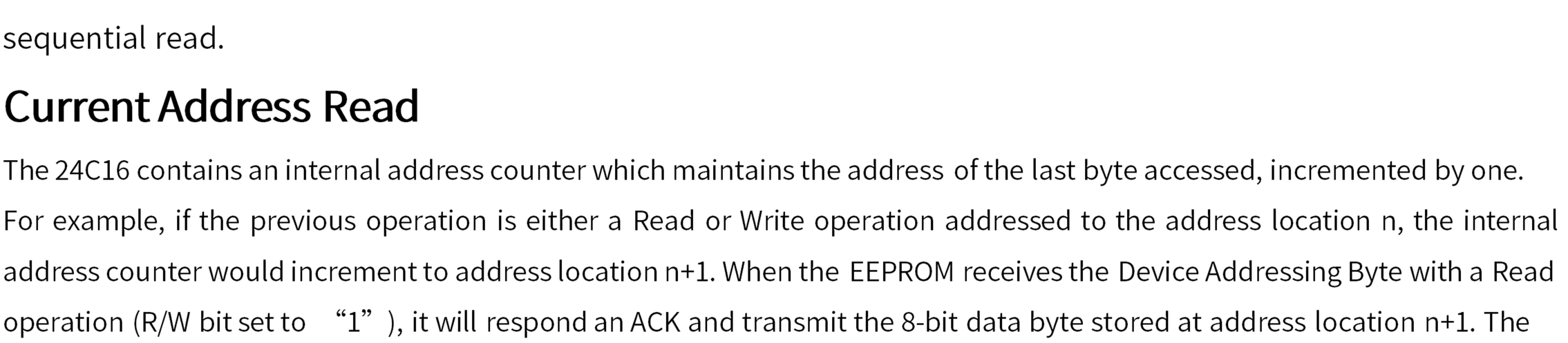

Random Address Read

Selective Read operations allow the Master device to select at random any memory location for a Read operation. The Master device first performs a 'dummy' Write operation by sending the Start condition, Device address and byte address of the location it wishes to read. After the 24C16 acknowledges the byte address, the Master device resends the Start condition and the Device address, this time with the R/W bit set to one. The EEPROM then responds with its ACK and sends the data requested. The Master device does not send an ACK but will generate a Stop condition. (Refer to Figure 9. Random Address Read Diagram.)

Figure 9. Random Address Read

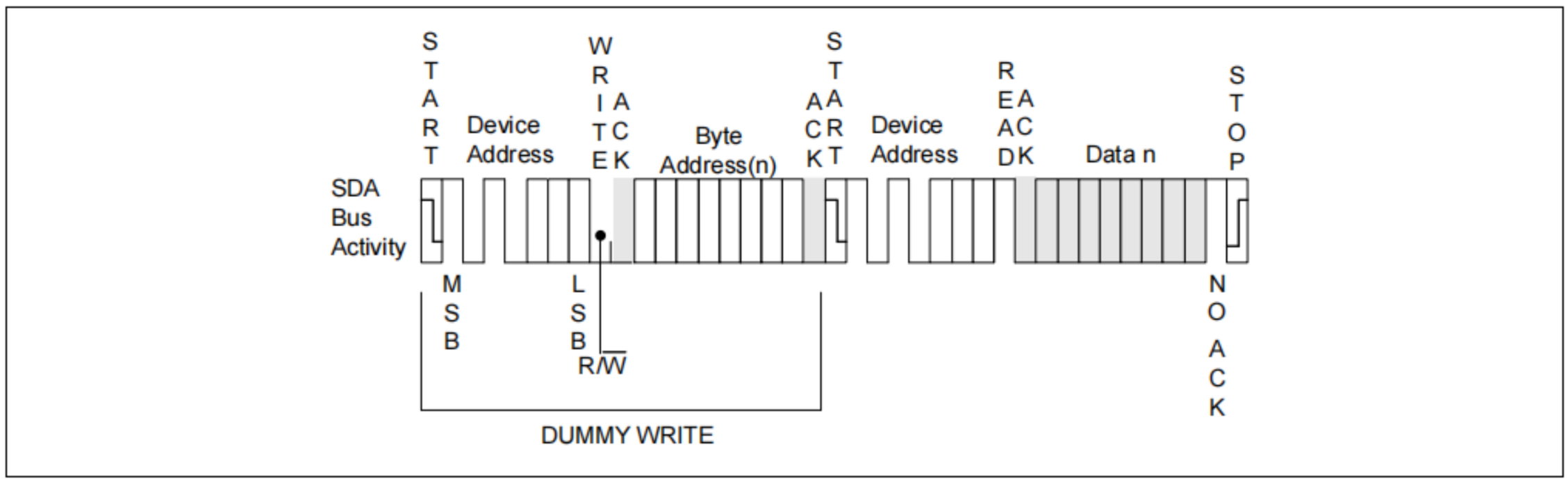

Sequential Read

Sequential Reads can be initiated as either a Current Address Read or Random Address Read. After the 24C16 sends the initial byte sequence, the Master device now responds with an ACK indicating it requires additional data from the 24C16. The EEPROM continues to output data for each ACK received. The Master device terminates the sequential Read operation by pulling SDA High (no ACK) indicating the last data word to be read, followed by a Stop condition. The data output is sequential, with the data from address n followed by the data from address n+1, n+2 ... etc. The address counter increments by one automatically, allow the entire memory contents to be serially read during sequential Read operation. When the memory address boundary of the array is reached, the address counter "rolls over" to address 0, and the device continues to output data. (Refer to Figure 10. Sequential Read Diagram)

Figure 10. Sequential Read

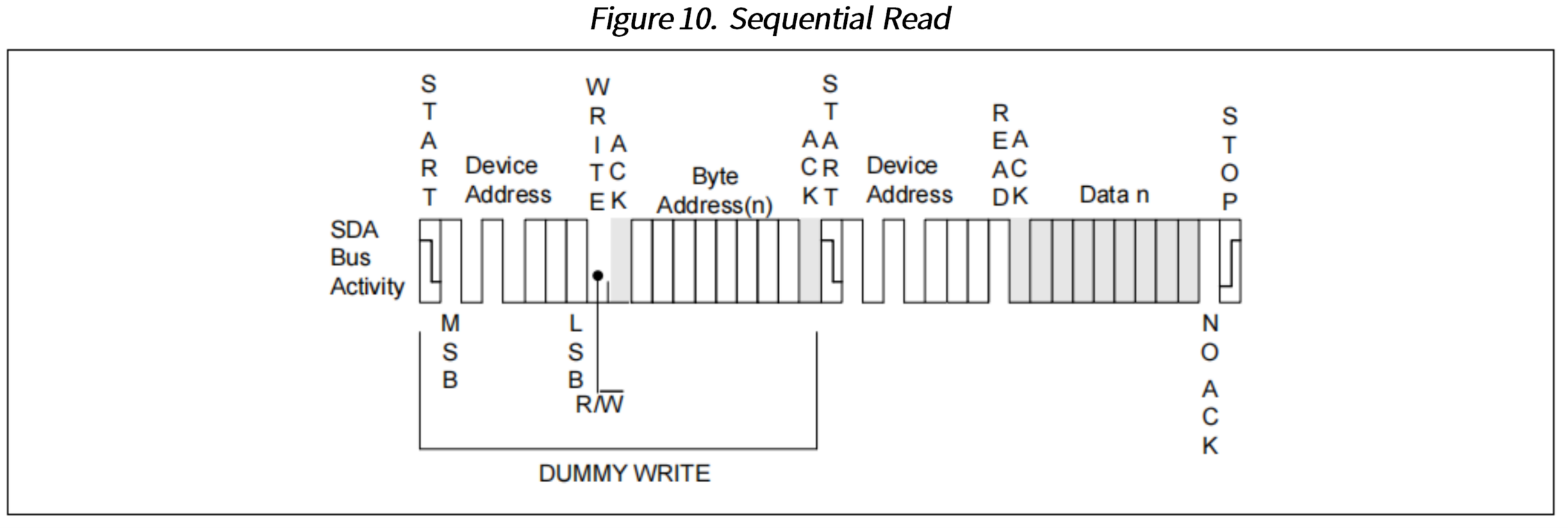

Identification Page

The 24C16 optionally offers an additional Identification Page (16 bytes) in addition to the 16Kbit memory, The Identification page are available for application specific data.

Once the application-specific data are written in the Identification page, the whole Identification page should be permanently locked in Read-only mode.

Write Identification Page

The Identification Page (16 bytes) is an additional page which can be written. It is written by issuing the Write Identification Page instruction. This instruction uses the same protocol and format as Page Write (into memory array), except for the following differences:

- Device type identifier = 1011b
- MSB address bits B2, B1, B0 and [A7:A4] are don't care, except for address bit A7 which must be “0”. LSB address bits [A3:A0] define the byte address inside the Identification page.

If the Identification page is locked, the data bytes transferred during the Write Identification Page instruction are not acknowledged (NoAck).

Lock Identification Page

The Lock Identification Page instruction (Lock ID) permanently locks the Identification page in Read-only mode. The Lock ID instruction is similar to Byte Write (into memory array) with the following specific conditions:

- Device type identifier = 1011b
- Address bit A7 must be ‘1’; all other address bits are don't care
- The data byte must be equal to the binary value xxxx xx1x, where x is don't care

Read Identification Page

The Identification Page can be read by issuing a Read Identification Page instruction. This instruction uses the same protocol and format as the Random Address Read (from memory array) with device type identifier defined as 1011b. MSB address bits B2, B1, B0 and [A7:A4] are don't care, except for address bit A7 which must be “0”. LSB address bits [A3:A0] define the byte address inside the Identification page. The number of bytes to read in the ID page must not exceed the page boundary (e.g.: when reading the Identification Page from location 10d, the number of bytes should be less than or equal to 6, as the ID page boundary is 16 bytes).

Read lock status

The locked/unlocked status of the Identification page can be checked by transmitting a specific truncated command [Identification Page Write instruction + one data byte] to the device. The device returns an acknowledge bit if the Identification page is unlocked, otherwise a NoAck bit if the Identification page is locked.

Right after this, it is recommended to transmit to the device a Start condition followed by a Stop condition, so that:

- Start: the truncated command is not executed because the Start condition resets the device internal logic.
- Stop: the device is then set back into Standby mode by the Stop condition.

Delivery State

24C16 is shipped erased status with all bytes value as FFh.

Application Recommendation

Operating Supply Voltage

Prior to selecting the memory and issuing instructions to it, a valid and stable VCC voltage within the specified [VCC(min),VCC(max)] range must be applied. This voltage must remain stable and valid until the end of the transmission of the instruction and, for a Write instruction, until the completion of the internal Write cycle (tW).
In order to filter out small ripples on VCC, it is recommended to connect a decoupling capacitor (typically 0.1µf) between VCC and GND. In addition, it is recommended to tie the pull-up resistor to the same VCC power source as EEPROM, if MCU is powered by a different VCC power source.

Power-up conditions

During power ramp up, once VCC level reaches the power on reset threshold, the EEPROM internal logic is reset to a known state. While VCC reaches the stable level above the minimum operation voltage, the EEPROM can be operated properly.
Therefore, in a good power on reset, VCC should always begin at 0V and rise straight to its normal operating level, instead of being at an uncertain level. Only after a good power on reset, can EEPROM work normally.
At power-up, the device does not respond to any instruction until VCC reaches the internal threshold voltage (this threshold is defined in the DC characteristic Table as VRES).
When VCC passes over the POR threshold, the device is reset and in the following state:

- in the Standby power mode
- deselected

As soon as the VCC voltage has reached a stable value within the [VCC(min), VCC(max)] range, the device is ready for operation.

Power-down

During power-down (continuous decrease in the VCC supply voltage below the minimum VCC operating voltage), the device must be in Standby power mode (that is after a STOP condition or after the completion of the Write cycle tW if an internal Write cycle is in progress).

Electrical Characteristics

Absolute Maximum Ratings

Symbol	Parameter	Value	Unit
V_S	Supply Voltage	-0.5 to 6.5	V
V_P	Voltage on Any Pin	–0.5 to 6.5	V
T_{STG}	Storage Temperature	–65 to +150	°C
I_{OUT}	Output Current	5	mA
V_{ESD}	Electrostatic pulse (Human Body model)	>4000	V

Note: Stress greater than those listed under Absolute Maximum Ratings may cause permanent damage to the device. This is a stress rating only and functional operation of the device at these or any other condition outside those indicated in the operational sections of this specification is not implied. Exposure to absolute maximum rating conditions for extended periods may affect reliability.

Operating Range

Range	Ambient Temperature (T_A)	V_{CC}
Industrial Grade	–40°C to +85°C	1.7V to 5.5V

Capacitance

Symbol	Parameter[1, 2]	Conditions	Max.	Unit
C_{IN}	Input Capacitance	V_{IN} = 0V	6	pF
$C_{I/O}$	Input/ Output Capacitance	$V_{I/O}$ = 0V	8	pF

Notes: [1] Tested initially and after any design or process changes that may affect these parameters and not 100% tested.

[2] Test conditions: T_A = 25°C, f = 1 MHz, V_{CC} = 5.0V.

Reliability

Symbol	Parameter	Condition	Min.	Unit
Endr	Endurance	Ta=+25°C	1 million	Program / Erase Cycles
DR	Data Retention	Ta=+25°C	100	Years

Power Up/Down and Voltage Drop

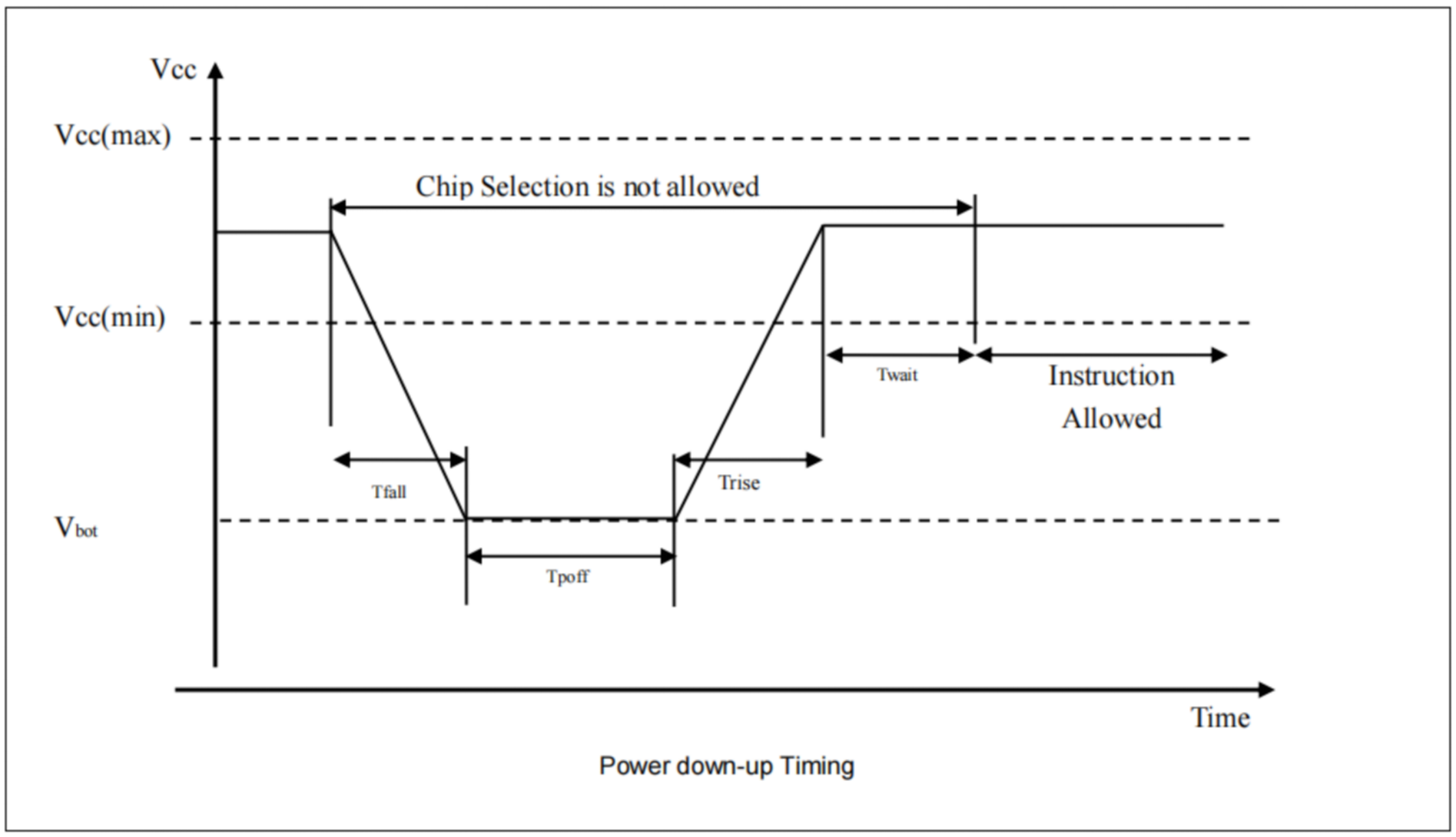

Power down-up Timing

Symbol	Parameter	min	max	unit
V_{bot}	VCC at power off		0.2	V
Tfall	VCC min to Vbot	1		ms
Tpoff	VCC at power off time	20		ms
Trise	Vbot to VCC min	0	1	ms
Twait	VCC Min to Instruction	2		ms

* All parameters may be changed after the design or process change.

DC Electrical Characteristic

Symbol	Parameter [1]	Test Conditions	Min.	Typ.	Max.	Unit
V_{CC}	Supply Voltage		1.7		5.5	V
V_{IH}	Input High Voltage(WP, A0, A1, A2)		0.7*V_{CC}		V_{CC}+0.5	V
	Input High Voltage(SCL and SDA)		0.7*V_{CC}		V_{CC}+0.5	
V_{IL}	Input Low Voltage		-0.5		0.3* V_{CC}	V
I_{LI}	Input Leakage Current	Vcc=5.5V,VIN = VCC max	—		2	μA
I_{LO}	Output Leakage Current	Vcc=5.5V	—		2	μA
V_{OL1}	Output Low Voltage	Vcc=1.7V,I_{OL} = 1.5 mA	—		0.2	V
V_{OL2}	Output Low Voltage	Vcc=2.5V,I_{OL} = 2.1 mA	—		0.4	V
I_{SB1}	Standby Current	Vcc=1.7V,V_{IN} = VCC or GND	—	0.2	1	μA
I_{SB2}	Standby Current	Vcc=2.5V,V_{IN} = VCC or GND	—	0.3	1	μA
I_{SB3}	Standby Current	Vcc=5.5V,V_{IN} = VCC or GND	—	0.5	1	μA
I_{CC1}	Read Current	Vcc=1.7V,Read at 1 MHz			0.5	mA
		Vcc=2.5V,Read at 1 MHz			0.8	mA
		Vcc=5.5V,Read at 1 MHz	—		1.2	mA
I_{CC2}	Write Current	Vcc=5.5V,During tWR			1.5	mA
V_{RES}	Internal reset threshold voltage				0.2	V

Note: The parameters are characterized but not 100% tested.

AC Electrical Characteristic

Symbol	Parameter [1][2]	1.7V≤Vcc≤5.5V Slow Mode		1.7V≤Vcc≤5.5V Fast Mode		Unit
		Min.	Max.	Min.	Max.	
F_{SCL}	SCK Clock Frequency		400		1000	KHz
T_{LOW}	Clock Low Period	1300	—	500	—	ns
T_{HIGH}	Clock High Period	600	—	260	—	ns
T_R	Rise Time (SCL and SDA)	—	300	—	120	ns
T_F	Fall Time (SCL and SDA)	—	300	—	120	ns
$T_{SU:STA}$	Start Condition Setup Time	600	—	260	—	ns
$T_{SU:STO}$	Stop Condition Setup Time	600	—	260	—	ns
$T_{HD:STA}$	Start Condition Hold Time	600	—	260	—	ns
$T_{SU:DAT}$	Data In Setup Time	100	—	50	—	ns
$T_{HD:DAT}$	Data In Hold Time	0	—	0	—	ns
T_{AA}	Clock to Output Access time (SCL Low to SDA Data Out Valid)	100	900	50	400	ns
T_{DH}	Data Out Hold Time (SCL Low to SDA Data Out Change)	100	—	50	—	ns
T_{WR}	Write Cycle Time	—	5	—	5	ms
T_{BUF}	Bus Free Time Before New Transmission	1300	—	500	—	ns
T	Noise Suppression Time	—	50	—	50	ns
Endr	Endurance (5.5V,25°C,page mode)	1 million				cycles

Notes: [1] The parameters are characterized but not 100% tested.

[2] AC measurement conditions:

R_L (connects to VCC): 1.3 kΩ (2.5V, 5.0V), 10 kΩ (1.7V)

C_L = 100 pF

Input pulse voltages: 0.3*V_{CC} to 0.7*V_{CC}

Input rise and fall times: ⩽50 ns

Timing reference voltages: half V_{CC} level

Timing Diagrams

Figure 11. Bus Timing

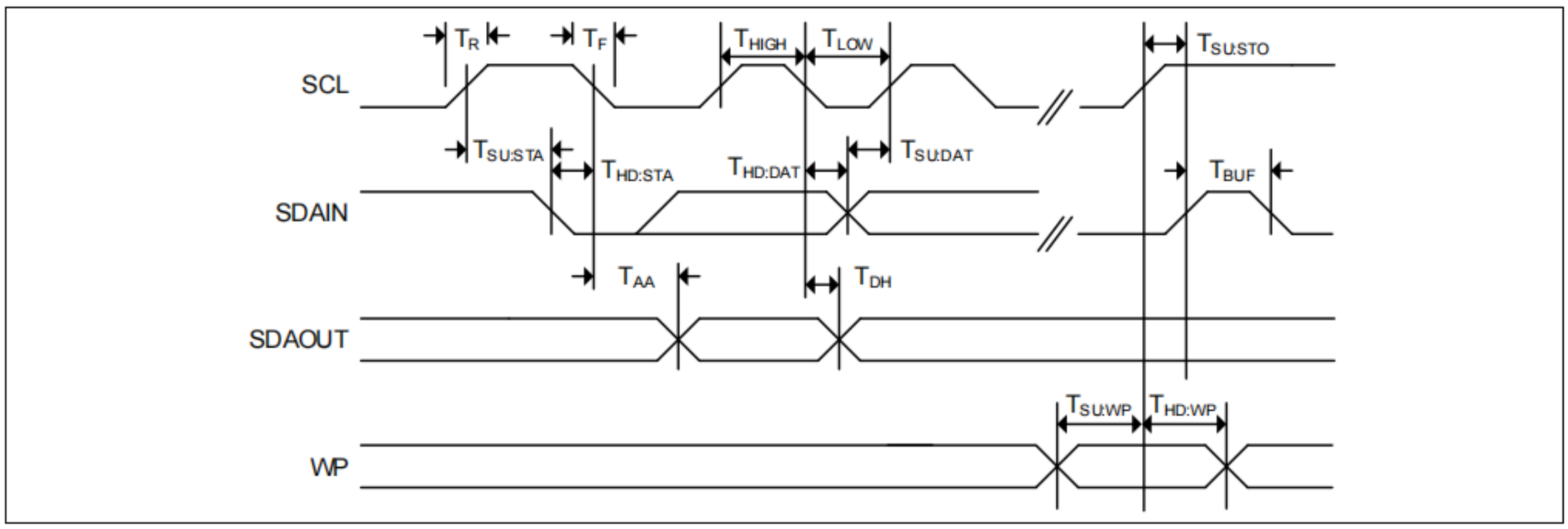

Figure 12. Write Cycle Timing

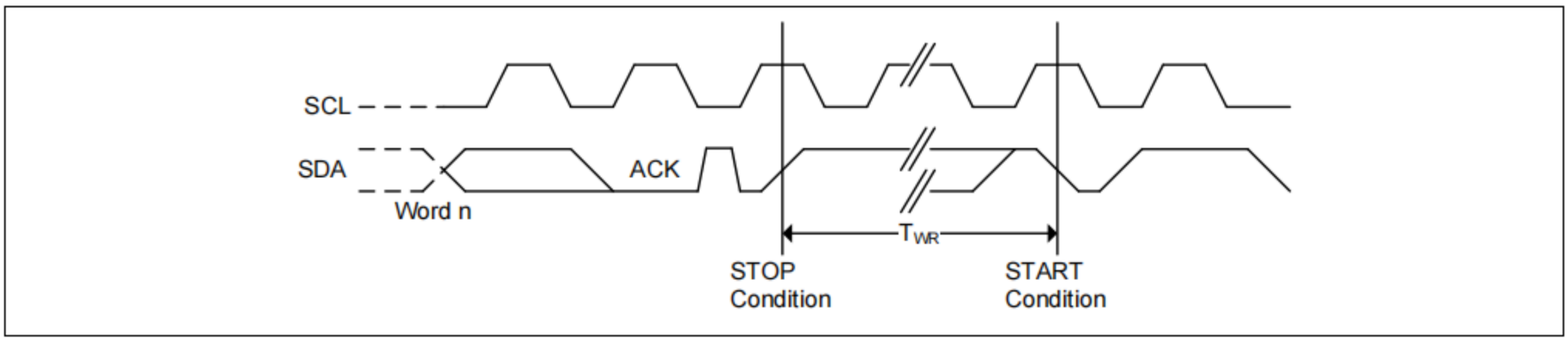

Outline Dimensions

SOP-8

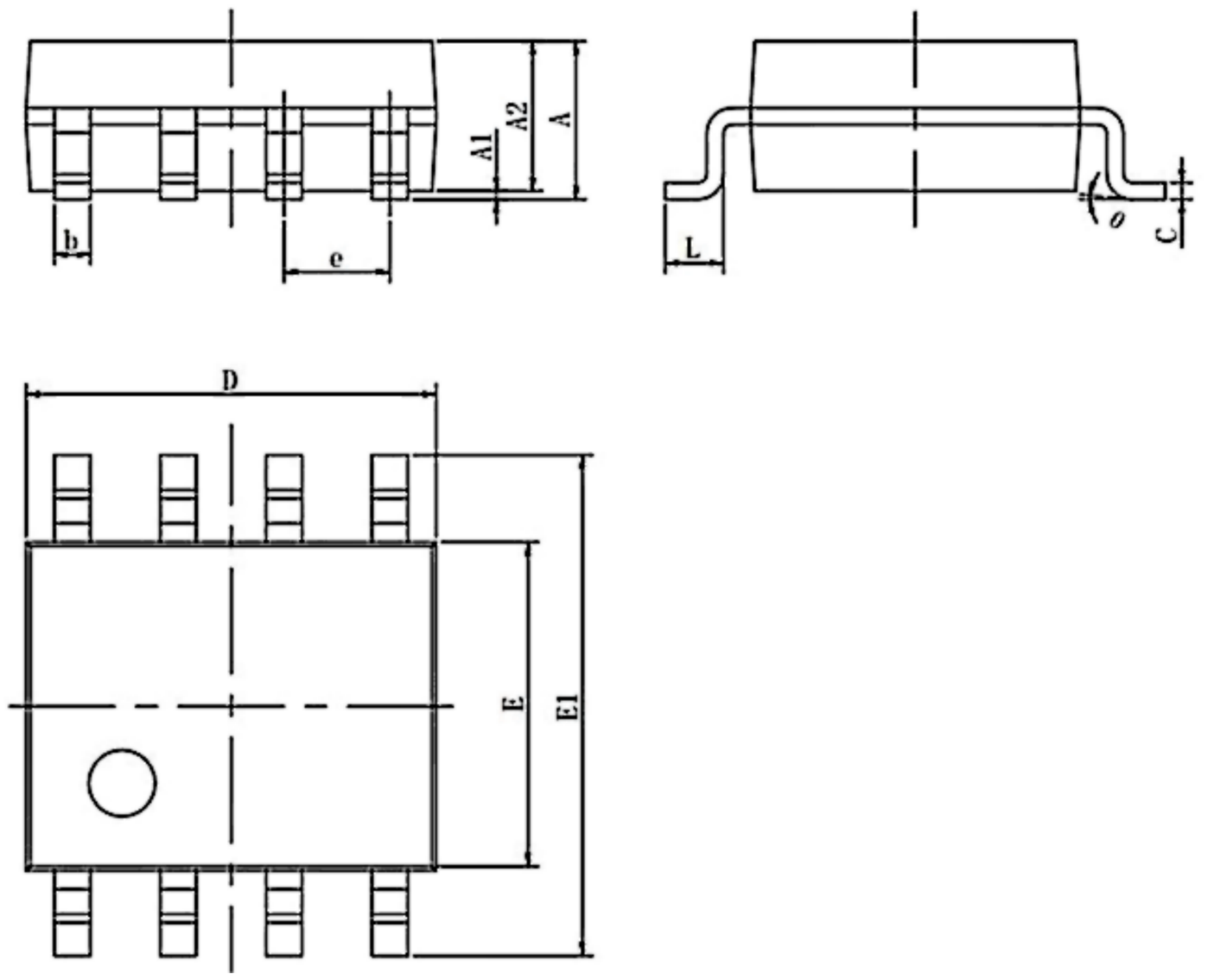

Symbol	Dimensions In Millimeters		Dimensions In Inches	
	Min	Max	Min	Max
A	1.350	1.800	0.053	0.071
A1	0.050	0.250	0.004	0.010
A2	1.250	1.550	0.053	0.061
b	0.330	0.510	0.013	0.020
C	0.170	0.250	0.006	0.010
D	4.780	5.000	0.185	0.197
E	3.800	4.000	0.150	0.157
E1	5.800	6.300	0.228	0.244
e	1.270(BSC)		0.050(BSC)	
L	0.400	1.270	0.016	0.050
θ	0°	8°	0°	8°

DIP-8

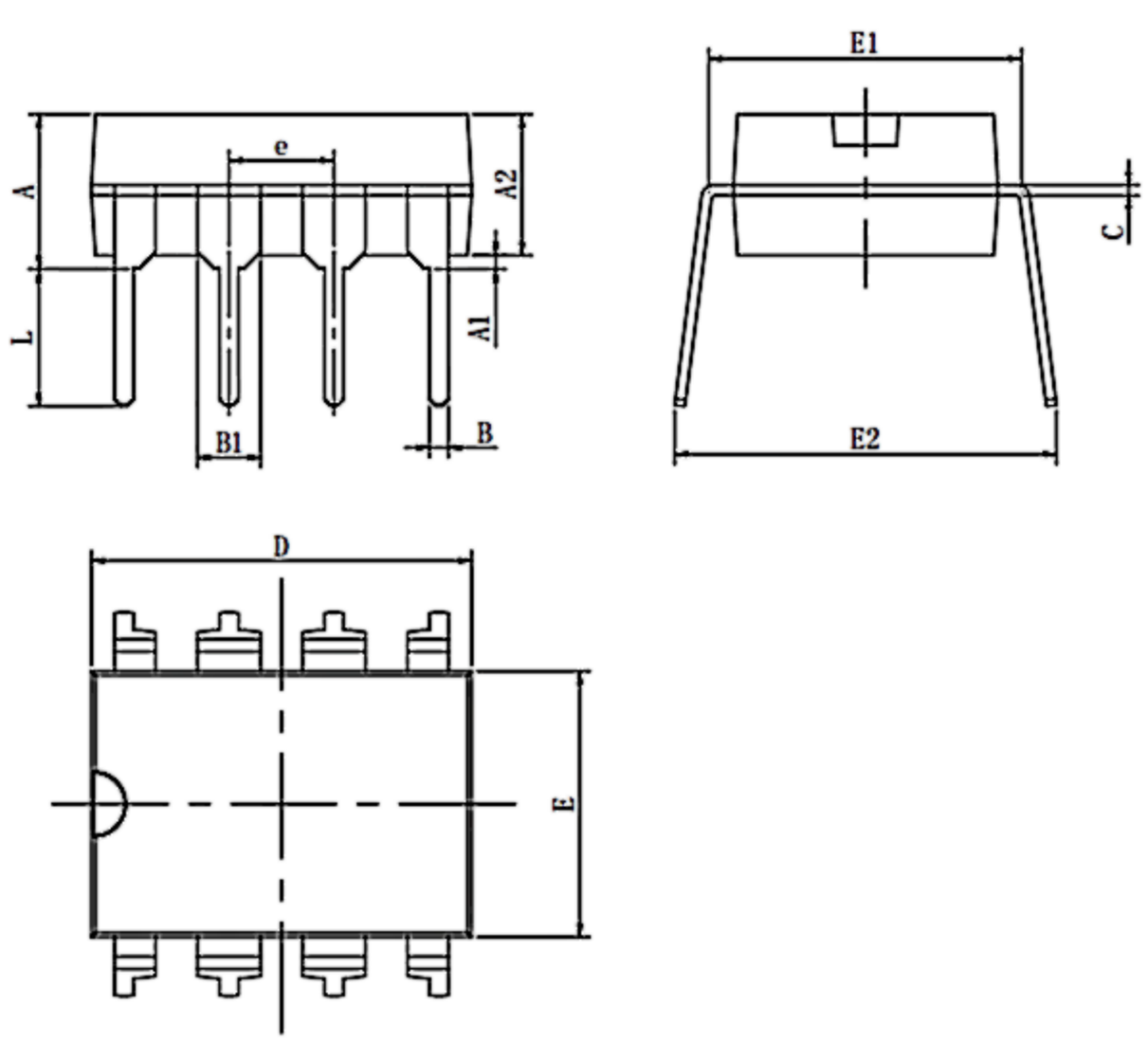

Symbol	Dimensions In Millimeters		Dimensions In Inches	
	Min	Max	Min	Max
A	3.710	4.310	0.146	0.170
A1	0.510		0.020	
A2	3.200	3.600	0.126	0.142
B	0.380	0.570	0.015	0.022
B1	1.524(BSC)		0.060(BSC)	
C	0.204	0.360	0.008	0.014
D	9.000	9.400	0.354	0.370
E	6.200	6.600	0.244	0.260
E1	7.320	7.920	0.288	0.312
e	2.540(BSC)		0.100(BSC)	
L	3.000	3.600	0.118	0.142
E2	8.400	9.000	0.331	0.354

Important Notice

- Green Micro chip reserves the right to change products and documents without notice. Customers should obtain and verify the completeness of the latest technical information before placing orders. Meanwhile, Green Micro chip shall not assume any responsibility or obligation for non-officially revised documents.

- Any parameters in the entire product specification are for reference only, and actual application testing shall prevail. When customers use the products for system design, they must comply with safety regulations and independently assume the following responsibilities: selecting suitable Green Micro chip products according to application requirements; completing design verification and full-link testing of the application; and ensuring that the application complies with safety regulations or other requirements of the target market. Customers shall bear all personal or property losses caused by design defects or illegal operations, which shall have no relation to Green Micro chip.

- Green Micro chip products are prohibited from being used in scenarios such as life support, military equipment, and key aerospace applications. All accidents and legal liabilities arising from out-of-scope use shall be borne by the user, and Green Micro chip shall not be held responsible.

- All technical resources of Green Micro chip (including data sheets and reference designs) are provided "as is", without guarantee of no defects or universality, and without any express or implied warranties. The documents are only authorized for product development and research described in this document. Unauthorized use of intellectual property, public reproduction, and reverse engineering are strictly prohibited. All claims and losses caused by illegal use shall be borne by the user, and Green Micro chip shall not be liable.