MF72 SERIES NTC Thermistor Datasheet

Features

- MF72 Series NTC thermistors for inrush current limiting
- Resistance tolerance <20%
- Big material constant(B value),small residual resistance
- Fast resporse,Long life and high reliability
- Excellent solder ability,Highly stable electrical characteristics

HNTC MF72 Series

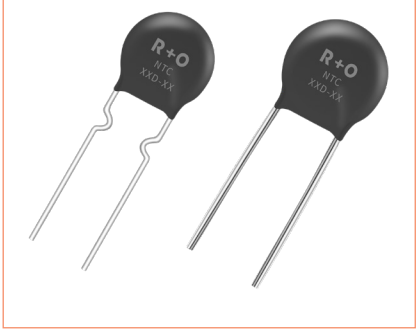

Applications

- Inrush current limiting, e.g. in switch-mode power supplies, soft-start motors
- Switching power-supply, switch power ,ups power
- Electronic energy saving lamps electronic ballast and all kinds of electric heater
- Household electrical appliances, AUDIO-visual equipment
- Communications, electronic motors, lighting

Part Number Code



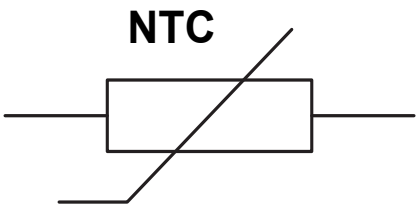

Recommended Soldering Conditions

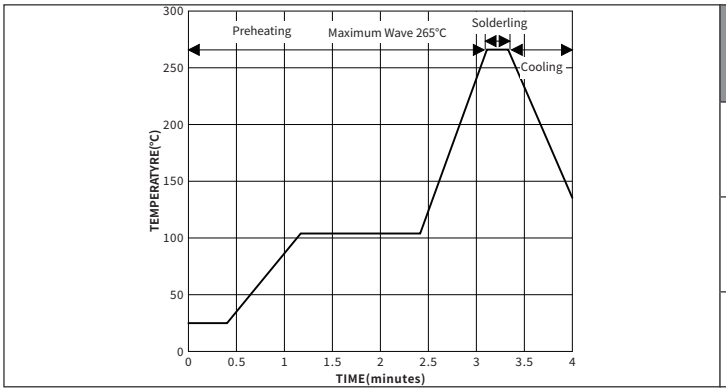

Item	Conditions
Peak Temperature	265°C
Dipping Time	10 secs. Max
Soldering	1 time

Recommendation Reworking Conditions with Soldering Iron

Item	Conditions
Temperature of Soldering Iron-tip	360°C Max
Soldering Time	3 secs. Max
Distance from Thermistor	2 mm Min

Electrical Characteristics (Ta=25°C Unless otherwise specified)

PARAMETER	Symbol	CONDITION	VALUE	UNIT
Rated Zero-Power Resistance	R_{25}	T_a=25°C ±0.2°C	10±20%	Ω
B Constant (Material Constant)	$B_{25/85}$	25°C /85°C	2800±10%	K
Max. steady State current	I_{max}	/	1	A
Max Shock Capacity	C_T	240V ac	82	μF
Thermal Dissipation Constant	δ	stationary in the air	9 typ	mW/°C
Thermal Time Constant	τ	stationary in the air	30 typ	sec
Residual Resistance	/	Max.steady State current	0.789	Ω
Operating Temperature Range	/	/	-40 to + 150	°C

Component Materials

Wrapper	Down-lead	Coating color
Modified phenolic resin	CP Wire	Black

Physical Dimensions (mm)

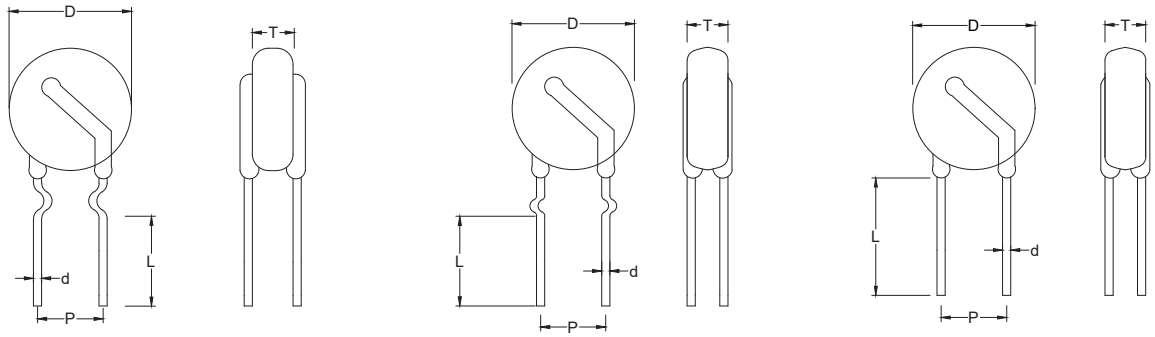

Inside Type　　Outside Type　　Straight Type

Note: Default inside type for long lead.

D (Max mm)	L(Min. mm)	d (mm)	T (Max. mm)	P (mm)
9.0	15.0	0.6±0.1	5.0	5.0±1.0

Ordering Information

Part Number	DELIVERY MODE	MPQ(PCS)
MF72 10D-7	Bulk	1,000

Electrical Test

Items	Test Methods and Remarks
Nominal Zero-Power Resistance at 25°C	Ambient temperature：25±0.2°C ;
Nominal B Constant	Measure the resistance at the ambient temperature of 25±0.05°C , 50±0.05°C or 85±0.05°C . $B_{(25/50℃)} = \frac{\ln R_{25}-\ln R_{50}}{1/T_{25}-1/T_{50}}$ $B_{(25/85℃)} = \frac{\ln R_{25}-\ln R_{85}}{1/T_{25}-1/T_{85}}$
Thermal Time Constant	The total time for the temperature of the thermistor to change by 63.2% of the difference from ambient temperature T0 (°C) to T1 (°C) by the drastic change of the power applied to thermistor from Non-zero Power to Zero-Power state, normally expressed in second(S)
Dissipation Factor	The required power which makes the NTC thermistor body temperature raise 1 °C through self-heated, normally expressed in milliwatts per degree Celsius (mW/°C). It can be calculated by the following formula: $\delta = \frac{W}{T-T_0}$

Reliability Test

Items	Test Conditions & Methods	Requirements
Tensile strength of terminals	Gradually applying the force specified and duration 10±1s Leads Diameter : 0.5 ＜ d ⩽ 0.8 ， Pull: 10N Leads Diameter : 0.8 ＜ d ⩽ 1.25 ， Pull: 20N	No visible damage, R25 ΔR/R ⩽ ±25%
Solderability	The leads are immersed in a tin fluid 6mm from the thermistor. The tin fluid temperature is 245±5°C , and the dip soldering time is 2s to 3s.	The solder is evenly coated on the surface of the lead immersed part, and the tin area is over 95%.
Solder resistance	Leads are immersed in a tin fluid at a distance of 6mm from the thermistor. The tin fluid temperature is 260±5°C , the dip soldering time is 10s±1s.	No visible damage, R25 ΔR/R ⩽ ±25%
Thermal shock	Temperature: -40±5°C , 30min / cycle, interval time 5min; temperature: +150±5°C , 30min / cycle, interval time 5min; 5 cycles	No visible damage, R25 ΔR/R ⩽ ±25%
High temperature storage	Temperature: 150±5°C , time:1000±24h	No visible damage, R25 ΔR/R ⩽ ±25%
Steady state damp heat	Temperature: 40±2°C，90 ～ 95% RH， time:1000±24h	No visible damage, R25 ΔR/R ⩽ ±25%
Maximum steady state current Life test	25±5°C ,Maximum steady state current，1000±24 hrs	No visible damage, R25 ΔR/R ⩽ ±25%
Endurance	25±5°C ,Maximum steady state current , Capacitance at 240Vac , 1min on / 5 min off ， 1000 cycles	No visible damage, R25 ΔR/R ⩽ ±25%
Insulation resistance	MIL-STD-202F, Method 302 ， 500VDC for 1min,between the leads and the coating laye	No visible damage, ⩾ 500MΩ

Environmental Specification

Storage temperature:	-10°C to +40°C
Storage Conditions:	Light-proof, Hermetically Sealed, Moisture-proof; The components should be left in their original packing to avoid soldering problems due to oxidized contacts.
Relative humidity:	< 75 % RH
Storage period	The components should be employed within 12 months after delivery,the components should be resealed after opening the packing.

Electrical Characteristics (Ta=25°C Unless otherwise specified)

Items	Characteristic Description	Characteristic curve
Derating Curve of Imax	When the applied ambient temperature of the product is lower than 0 °C or higher than 25 °C , the maximum allowable working current Imax should be reduced, and the amount of reduction is shown in the curve below.	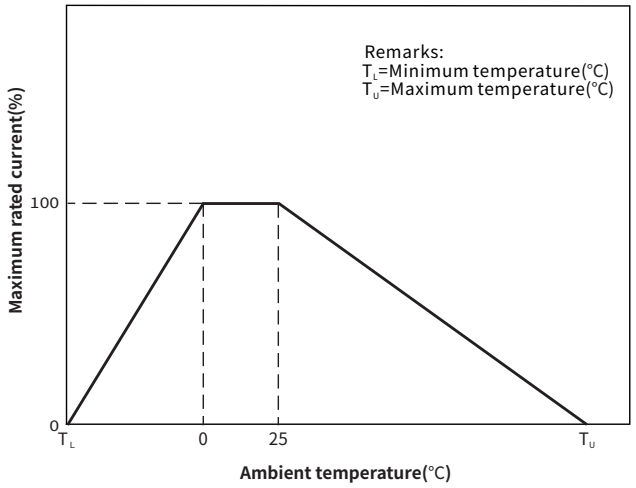
R-T Characteristic Curve	R-T characteristic is the relationship between zero-power resistance and bodu temperature of the thermistor . The resistance value of the NTC thermistor is measured under a current with a sufficiently low spontaneous heat.	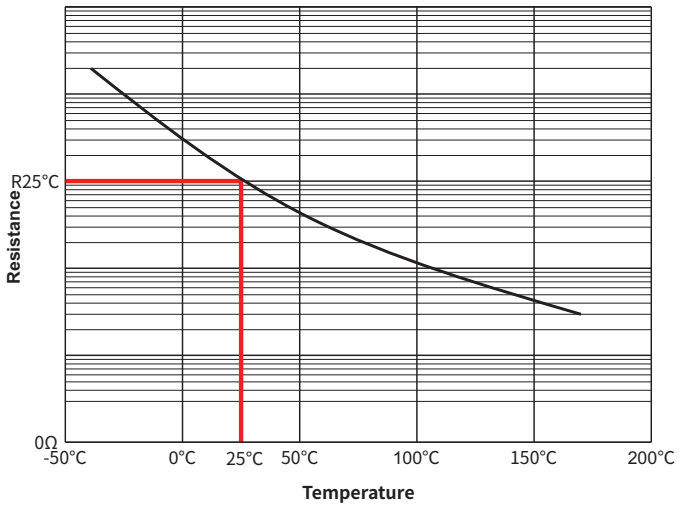
V-I Static Characteristic curve	In regions with low current, as the current gradually increases, the voltage of the ohmic contact also gradually rises. By dissipating heat from the surface of the thermistor and other parts, the self-heating caused by the current flow does not lead to an increase in the resistance temperature. However, when the heat generation is large, the temperature of the thermistor itself rises and the resistance value decreases. In such regions, the proportional relationship between current and voltage no longer holds.	