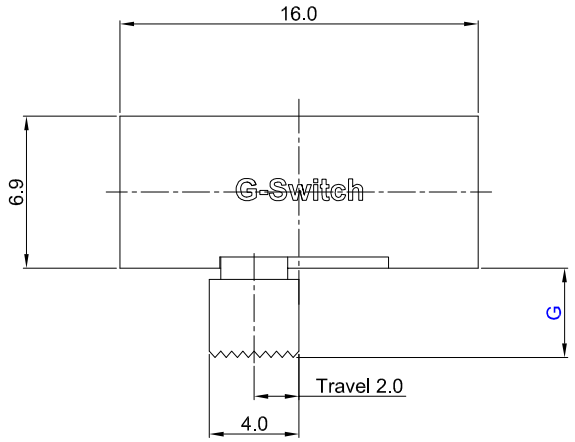

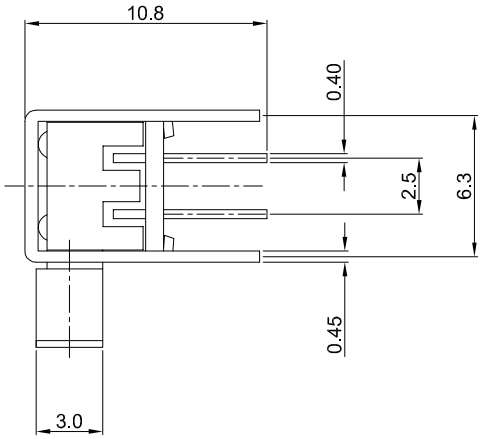

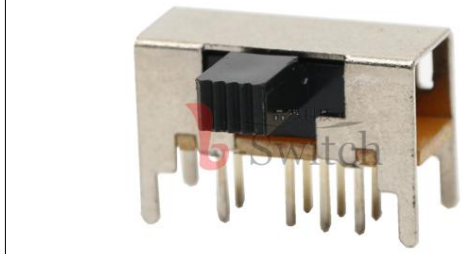

SK-23D05-G045

SK:Horizontal shank

G-Switch P/N

Switch Height(mm)

G020=2.0	G030=3.0
G040=4.0	G045=4.5
G050=5.0	G055=5.5
G060=6.0	G065=6.5
G070=7.0	G075=7.5
G080=8.0	G085=8.5
G090=9.0	G095=9.5
G100=10.0	

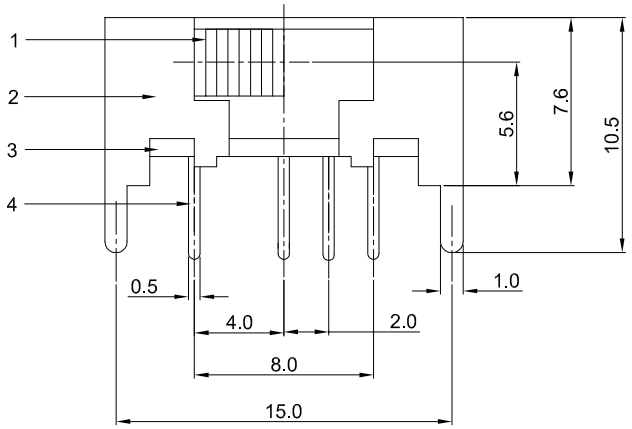

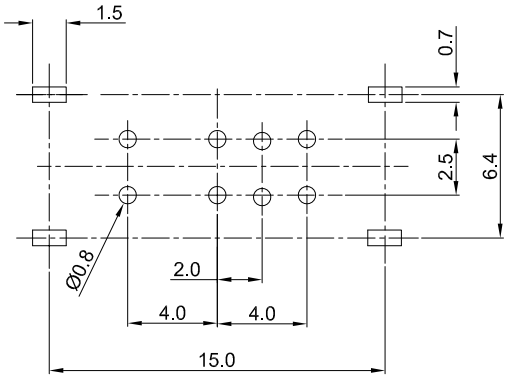

RECOMMENDED PCB LAYOUT
TOLERANCE:±0.05

G-Switch Specification:

1.Operating temperature range: -40°C ~ +85°C
2.Rating: 0.3A.50V DC
3.Insulation resistance: 100MΩ min.100V DC
4.Dielectric strength: 500V AC for 1 min
5.Contact resistance: 100mΩ max.
6.Terminals arrangement: 2P3T
7.Travel: 2.0±0.3mm
8.Switch lifetime: 5,000Cycles

NO.	PART NAME	MATERIAL	REMARK
7	SPRING	STEEL WIRE	
6	STEEL BALL	STEEL WIRE	
5	CONTACT	PBS STRIP	Ag PLATED
4	TERMINAL	BRASS STRIP	Ag PLATED
3	BASE	PHENOLIC RESIN	
2	FRAME	STEEL STRIP	Ni PLATED
1	KNOB	PA66	BLACK

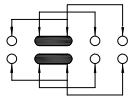

CIRCUIT DIAGRAM

Pb Process Capable

RoHS Compliant
EU RoHS Standards

SCALE: 1:1	UNIT: mm	Title:	Horizontal Slide Switch DIP 16.0×7.6×H4.5mm
SIZE: A4		Molde Code:	SK-23D05-G045

Unless otherwise General Tolerance:

X.	±0.40
X.x	±0.30
X.xx	±0.20
X°	±3°

DRAWN	CHECKED	APPROVED	DATE
Lai	Chen	Chen	2025.11.09

品赞科技
b-Switch
www.dg-switch.com

REV: A0 SHEET: 1/1