

DIM A	DIM B	CONTACT AREA	MODEL CODE
0.60	7.47 with steel welded feet	Au3u"	GT-USB-9116A01-03
0.90			GT-USB-9116A02-03
1.20			GT-USB-9116A03-03
1.40			GT-USB-9116A04-03
1.60			GT-USB-9116A05-03
0.60	without steel welded feet		GT-USB-9116A06-03
0.90			GT-USB-9116A07-03
1.20			GT-USB-9116A08-03
1.60			GT-USB-9116A09-03



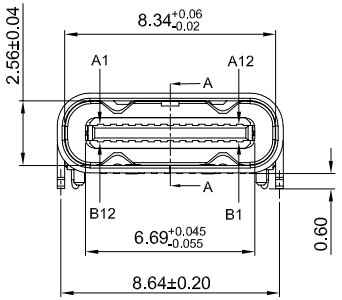

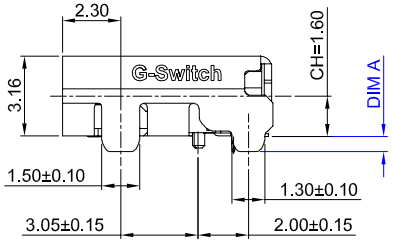

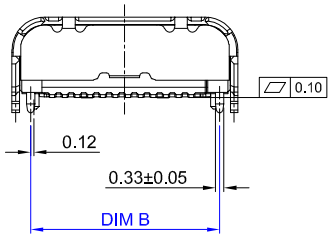

G-Switch USB-C Specification:

1.Current rated: 10A on vbus/1.25A
on vconn/0.25A on other
Voltage rating: 48V AC/DC
2.Withstanding voltage: 100V AC/minute
3.Contact resistance: 40mΩ Max
4.Insulation resistance: 100MΩ Min
5.Operating temperature: -40°C ~ +85°C
6.Mating force: 5N~20N
7.Unmating force: 8N~20N,after durability test: 6N~20N
8.Durability cycle:10,000 cycles
9.Data transmission rate up to 40Gbps
10.Compliant with: IEC62680-1-3

USB IF TID:16013

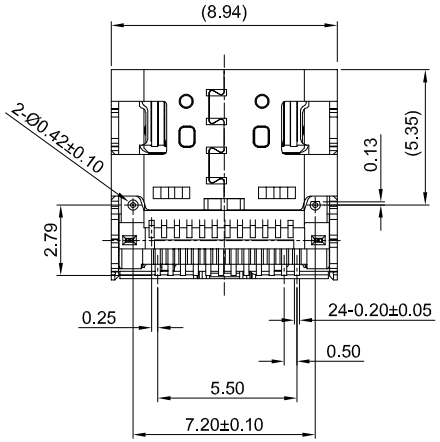

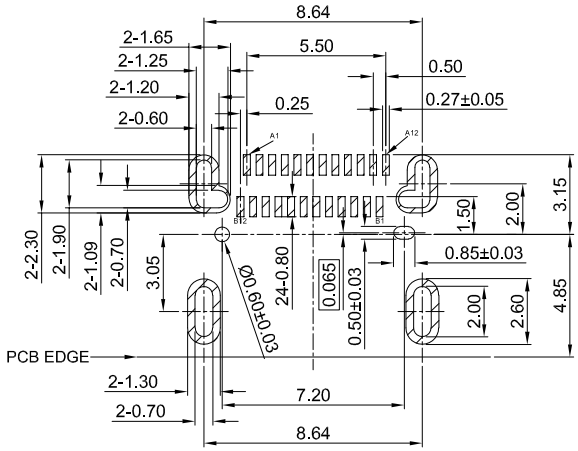

PCB REFERENCE DIAGRAM
TOLERANCE:±0.05

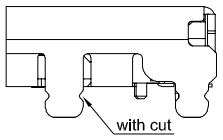

NOTE:
DIM A: 1.2、1.4、1.6 with cut
DIM A: 0.6、0.9 without cut

A1	A2	A3	A4	A5	A6	A7	A8	A9	A10	A11	A12
GND	TX1+	TX1-	VBUS	CC1	D+	D-	SBU1	VBUS	RX2-	RX2+	GND
First	Second	Second	First	Second	Second	Second	Second	First	Second	Second	First

B12	B11	B10	B9	B8	B7	B6	B5	B4	B3	B2	B1
GND	RX1+	RX1-	VBUS	SBU2	D-	D+	CC2	VBUS	TX2-	TX2+	GND
First	Second	Second	First	Second	Second	Second	Second	First	Second	Second	First

NO.	PARTS	MATERIAL	REMARKS
1	SHELL	STAINLESS STEEL 304	Ni30u"MIN PLATED
2	MID PLATE	STAINLESS STEEL 301	--
3	HOUSING	PA9T	BLACK UL 94V-0
4	TERMINALS	COPPER ALLOY C18140	Au PLATED ON CONTACT AREA G/F PLATED ON SOLDER AREA

Pb Process Capable
RoHS Compliant EU RoHS Standards
Halogen Free Compliant Halogen Free

SCALE: 1:1	UNIT: mm	Title:	Horizontal Type-C 24P Female SMT CH=1.60 L=8.17mm
SIZE: A4		Model Code:	GT-USB-9116AXX-XX

Unless otherwise General Tolerance:

X.	±0.40
X.x	±0.30
X.xx	±0.20
X.xxx	±0.10
X°	±5°

DRAWN	CHECKED	APPROVED	DATE
Wu	Xia	Chen	2025.02.06

品赞科技 b-Switch www.dg-switch.com

REV: A0 SHEET: 1/1