20V P-Channel MOSFET

1 General Description

1.1 Features

- Trench FET Power MOSFET
- V_{DS}=-20V
- I_D=-2.8A
- $R_{DS(ON)}$≤85mΩ (at V_{GS}=-4.5V)
- $R_{DS(ON)}$≤110mΩ (at V_{GS}=-2.5V)

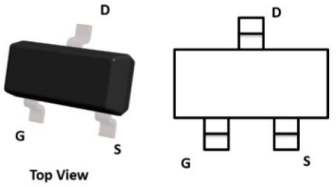

1.2 Typical Applications

- Load Switch for Portable Devices
- DC/DC Converter

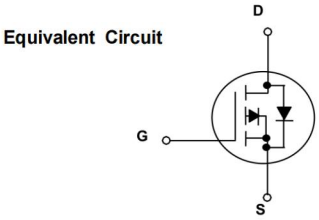

2 Package and Ordering Information

PACKAGE	DEVICE	PACKING	QUANTITY (pcs)
SOT-23	SI2301A	REEL	3000/REEL

3 Absolute Maximum Ratings(Ta=25℃ Unless otherwise specified)

PARAMETER	SYMBOL	Rating	UNIT
Drain-Source Voltage	V_{DS}	-20	V
Gate-Source Voltage	V_{GS}	±12	V
Continuous Drain Current	I_D	-2.8	A
Pulsed Drain Current	I_{DM}	-12	A
Power Dissipation	P_D	0.4	W
Junction Temperature	T_J	150	℃
Storage Temperature Range	T_{STG}	-55 to +150	℃
Thermal Characteristics			
Thermal Resistance Junction-Ambient (t≤5s)	$R_{\theta JA}$	125	℃/W

4 Electrical Characteristics(Ta=25℃ Unless otherwise specified)

PARAMETER	SYMBOL	TEST CONDITION	MIN	TYP	MAX	UNIT
Static Parameters						
Drain-Source Breakdown Voltage	BV_{DSS}	V_{GS}=0V,I_D=-250μA	-20	-	-	V
Zero Gate Voltage Drain Current	I_{DSS}	V_{DS}=-20V,V_{GS}=0V	-	-	-1	μA
Gate- Body Leakage Current	I_{GSS}	V_{GS}=±8V,V_{DS}=0V	-	-	±100	nA
Gate Threshold Voltage	$V_{GS(th)}$	V_{DS}=V_{GS},I_D=-250μA	-0.4	-	-1	V
Static Drain-Source On-Resistance	$R_{DS(on)}$	V_{GS}=-4.5V,I_D=-2.8A	-	-	85	mΩ
		V_{GS}=-2.5V,I_D=-2.0A	-	-	110	
Forward Transconductance	g_{FS}	V_{DS}=-5.0V,I_D=-2.8A	-	6.5	-	S
Dynamic Parameters						
Input Capacitance	C_{iss}	V_{DS}=-10V,V_{GS}=0V f=1MHZ	-	405	-	pF
Output Capacitance	C_{oss}		-	75	-	
Reverse Transfer Capacitance	C_{rss}		-	55	-	
Gate Resistance	R_g	f=1MHZ	-	6	-	Ω
Total Gate Charge	Q_g	V_{DS}=-10V,V_{GS}=-4.5V,I_D=-3A	-	5.5	10	nC
		V_{DS}=-10V,V_{GS}=-2.5V I_D=-3A	-	3.3	6	
Gate-Source Charge	Q_{gs}		-	0.7	-	
Gate-Drain Charge	Q_{gd}		-	1.3	-	
Turn-on Delay Time	$t_{d(on)}$	V_{GS}=-10V,I_D=-1A,V_{GEN}=-4.5V R_L=10Ω, R_g=1Ω,	-	3	-	ns
Rise Time	t_r		-	2.5	-	
Turn-off Delay Time	$t_{d(off)}$		-	25	-	
Fall Time	t_f		-	4	-	
Drain-source Body Diode Characteristics Parameters						
Diode Forward Voltage	V_{SD}	I_S=-0.7A	-	-0.8	-1.2	V
Maximum Body-Diode Continuous Current	I_S	-	-	-	-1.3	A
Pulse diode forward current	I_{SM}	-			-10	A

Notes:

a.Pulse Test:Pulse Width＜300μs,Duty Cycle ≤2%.

b.Guaranteed by design,not subject to production testing.

5 Package Outline Dimensions

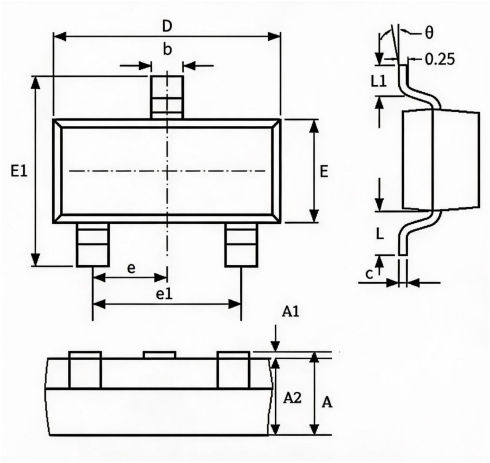

Symbol	Millimeters		Inches	
	Min	Max	Min	Max
A	0.90	1.15	0.035	0.04
A1	0	0.10	0	0.004
A2	0.90	1.05	0.035	0.041
b	0.30	0.50	0.012	0.020
c	0.08	0.15	0.003	0.006
D	2.80	3.00	0.110	0.118
E	1.20	1.40	0.047	0.055
E1	2.25	2.55	0.089	0.100
e	0.95 TYP.		0.037 TYP.	
e1	1.80	2.00	0.071	0.079
L	0.55REF.		0.022REF.	
L1	0.30	0.50	0.012	0.020
θ	0°	8°	0°	8°

Disclaimer

1. All information contained in this document is for reference only. Shandong Baocheng Electronics Co.,Ltd reserves the right to revise this document, product specifications and related data at any time without prior notice. Customers shall obtain and confirm the latest product documents and specifications before purchasing or using the products.

2. Under no circumstances shall the Company be liable for any failure or damage caused by the operation of semiconductor devices beyond the maximum rated values.

3. Shandong Baocheng Electronics Co.,Ltd does not warrant the suitability of its products for any specific application and assumes no responsibility for customer's complete machine design or application debugging. Without written approval, products are prohibited from being used as key components of life support equipment. The Company shall not be liable for any consequences arising from unauthorized use.

4. No intellectual property license of Shandong Baocheng Electronics Co.,Ltd is granted, explicitly or implicitly, through this document.