SP30N08P8

30V N-Channel MOSFET

Product Summary

$V_{(BR)DSS}$	$R_{DS(on)TYP}$	I_D
30V	8.5mΩ@10V	10.3A
	11.5mΩ@4.5V	

合肥矽普半导体
Siliup Semiconductor Technology Co.Ltd
技术 品质 服务
www.siliup.com

Feature

- Fast Switching
- Low Gate Charge and Rdson
- 100% Single Pulse avalanche energy Test

Applications

- Power Switching Application
- Hard switched and high frequency circuits
- Uninterruptible Power Supply

Package

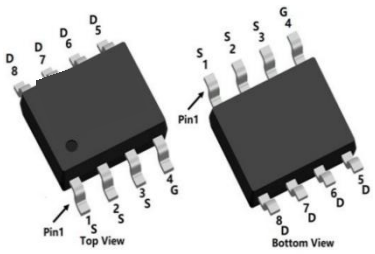

SOP-8L

Circuit Diagram

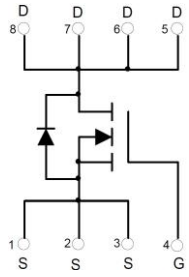

Marking

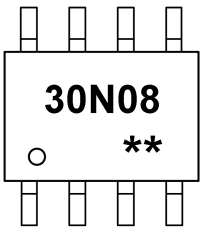

30N08 :Device Code
**** :Week Code

Order Information

Device	Package	Unit/Tape
SP30N08P8	SOP-8L	4000

Absolute maximum ratings (Ta=25℃,unless otherwise noted)

Parameter	Symbol	Rating	Units
Drain-Source Voltage	V_{DS}	30	V
Gate-Source Voltage	V_{GS}	±20	V
Continuous Drain Current(Ta=25℃)	I_D	10.3	A
Continuous Drain Current(Ta=100℃)	I_D	6.8	A
Pulsed Drain Current	I_{DM}	41.2	A
Single Pulse Avalanche Energy[1]	E_{AS}	6	mJ
Power Dissipation(Ta=25℃)	P_D	2.3	W
Power Dissipation(Ta=100℃)	P_D	0.92	W
Thermal Resistance Junction-to-Ambient	$R_{\theta JA}$	54	℃/W
Storage Temperature Range	T_{STG}	-55 to 150	℃
Operating Junction Temperature Range	T_J	-55 to 150	℃

Electrical characteristics (Ta=25℃, unless otherwise noted)

Parameter	Symbol	Conditions	Min.	Typ.	Max.	Unit
Static Characteristics						
Drain-Source Breakdown Voltage	BV_{DSS}	VGS=0V , ID=250uA	30	-	-	V
Drain-Source Leakage Current	I_{DSS}	VDS=24V , VGS=0V , TJ=25℃	-	-	1	uA
Gate-Source Leakage Current	I_{GSS}	VGS=±20V , VDS=0V	-	-	±100	nA
Gate Threshold Voltage	$V_{GS(th)}$	VGS=VDS , ID =250uA	1.0	1.6	2.2	V
Static Drain-Source On-Resistance	$R_{DS(ON)}$	VGS=10V , ID=8A	-	8.5	10.5	mΩ
		VGS=4.5V , ID=6A	-	11.5	15.5	
Gate Resistance	R_G	VDS=15V , VGS=0V , f=1MHz	-	1.52	-	Ω
Dynamic characteristics						
Input Capacitance	C_{iss}	VDS=15V , VGS=0V , f=1MHz	-	1068	-	pF
Output Capacitance	C_{oss}		-	132	-	
Reverse Transfer Capacitance	C_{rss}		-	116	-	
Total Gate Charge	Q_g	VDS=15V , VGS=10V , ID=10A	-	20.8	-	nC
Gate-Source Charge	Q_{gs}		-	2.4	-	
Gate-Drain Charge	Q_{gd}		-	4.2	-	
Gate Pleteau Vlotage	$V_{pleteau}$		-	3	-	V
Switching Characteristics						
Turn-On Delay Time	$T_{d(on)}$	VDD=15V , VGS=10V , RG=6Ω , ID=10A	-	6.6	-	nS
Rise Time	T_r		-	338	-	
Turn-Off Delay Time	$T_{d(off)}$		-	18	-	
Fall Time	T_f		-	10	-	
Diode Characteristics						
Diode Forward Voltage	V_{SD}	VGS=0V , IS=1A , TJ=25℃	-	-	1.2	V
Diode Continuous Current	I_S		-	-	10.3	A
Reverse recover time	T_{rr}	IS=10A , di/dt=100A/us , TJ=25℃	-	8	-	nS
Reverse recovery charge	Q_{rr}		-	1.8	-	nC

Note :

1. The EAS test condition is VDD=25V, VGS=10V, L=0.1mH, RG=25Ω

Typical Characteristics

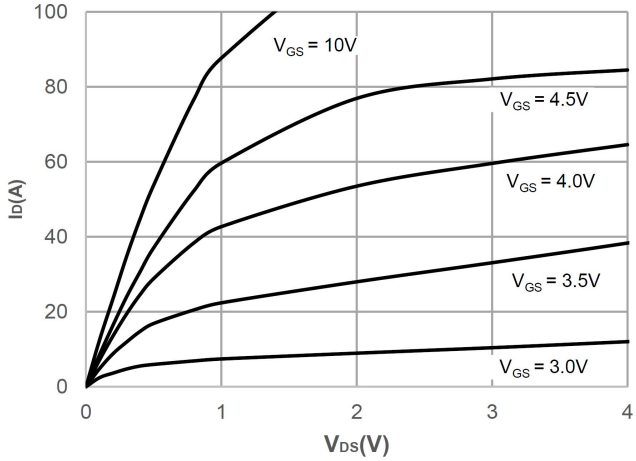

Output Characteristics

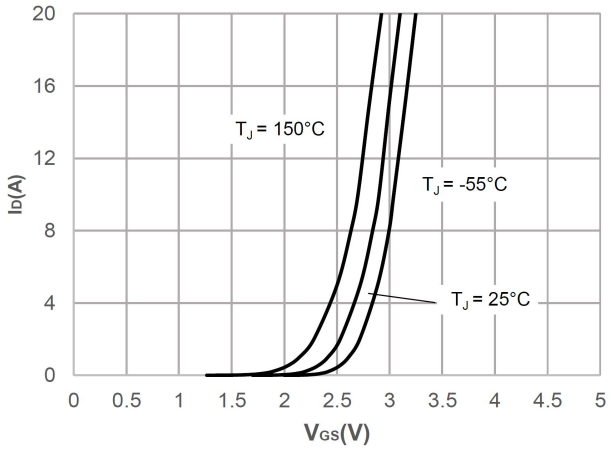

Typical Transfer Characteristics

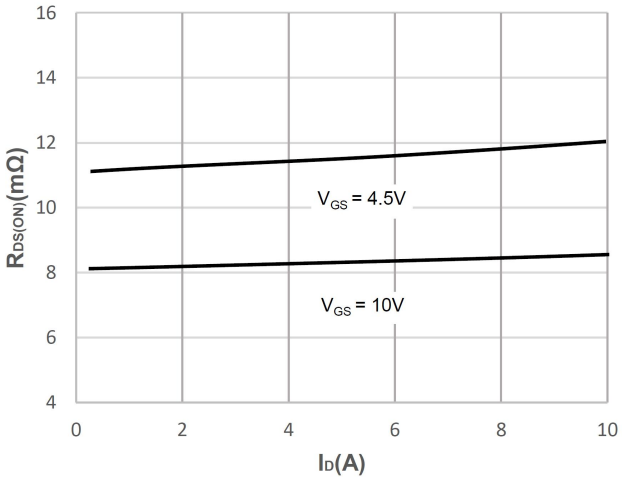

On-resistance vs. Drain Current

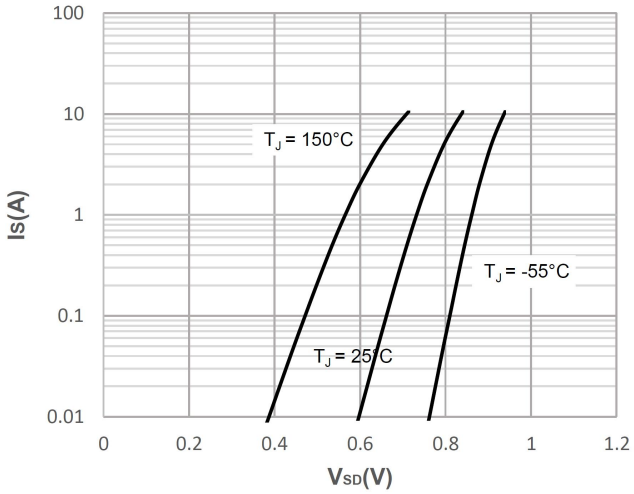

Body Diode Characteristics

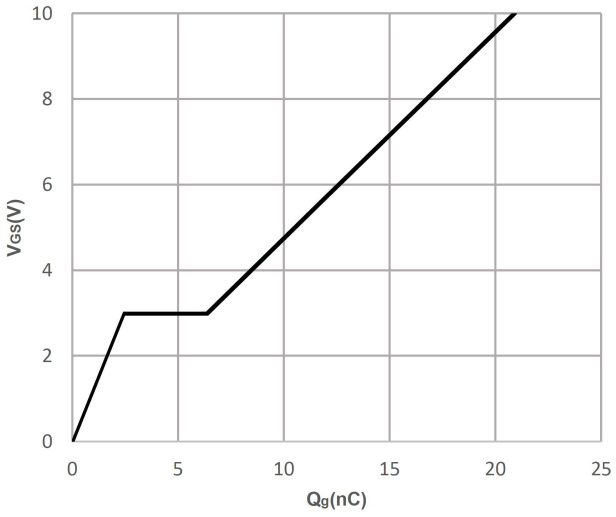

Gate Charge Characteristics

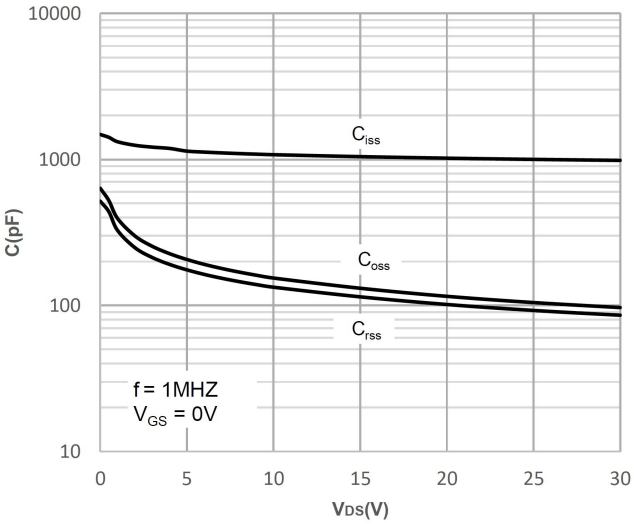

Capacitance Characteristics

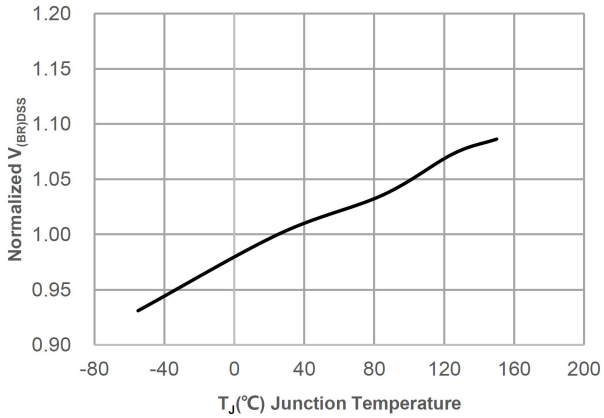

Normalized Breakdown voltage vs. Junction Temperature

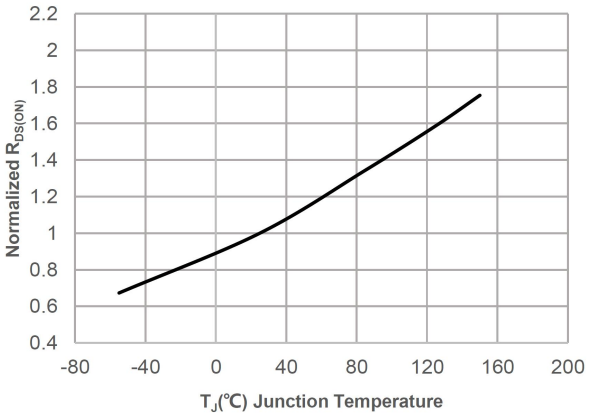

Normalized on Resistance vs. Junction Temperature

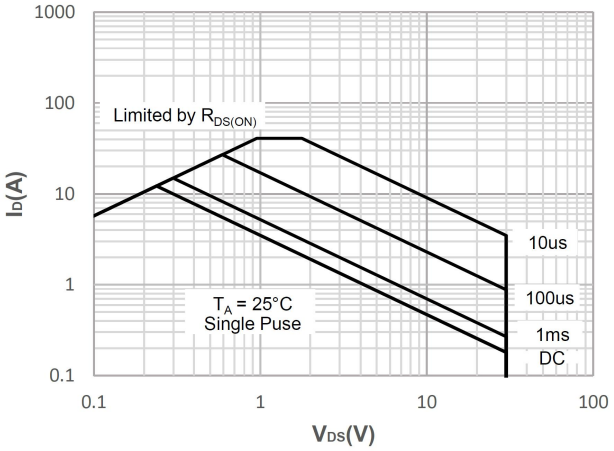

Maximum Safe Operating Area

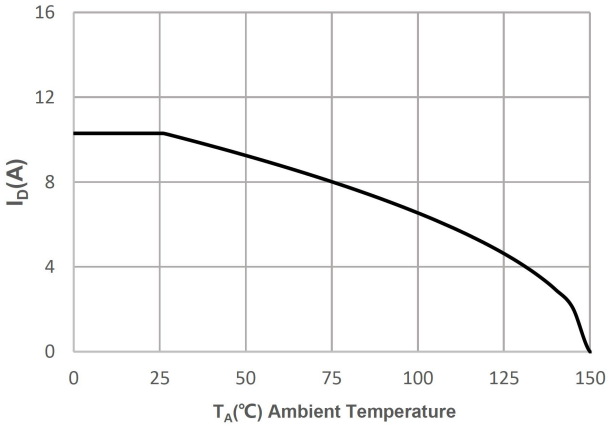

Maximum Continuous Drian Current vs. Ambient Temperature

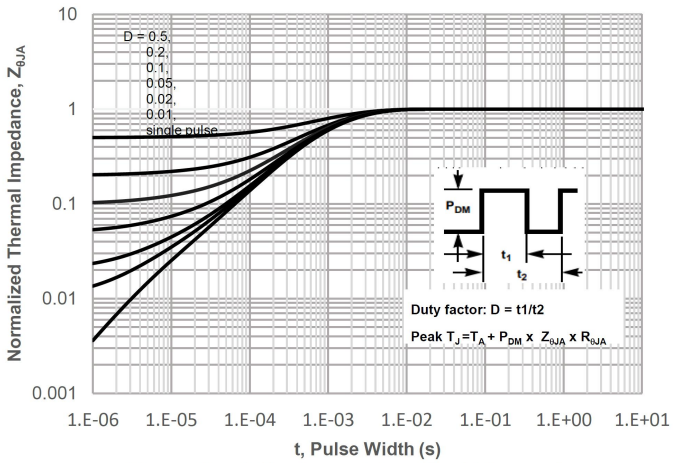

Normalized Maximum Transient Thermal Impedance

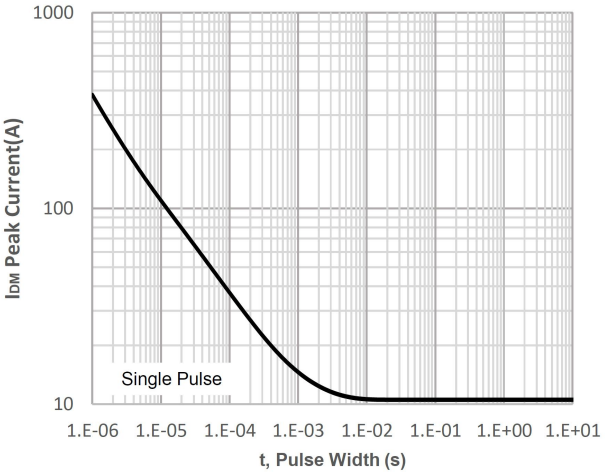

Peak Current Capacity

Test Circuit

Gate Charge

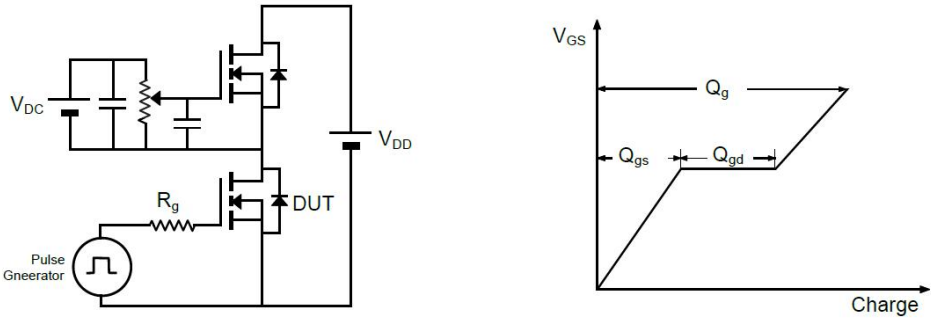

Resistive Load Switching Time

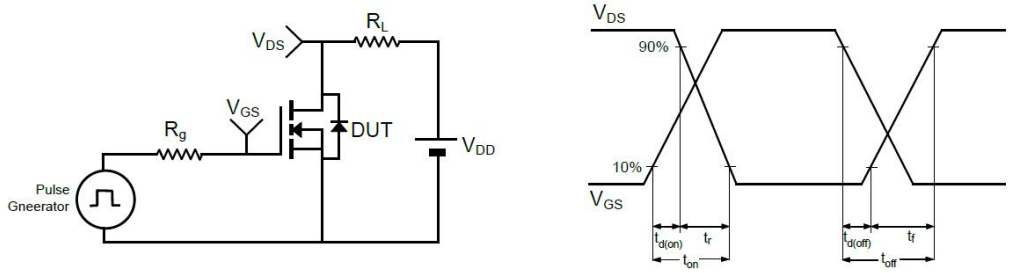

Un-clamped Inductive Load Switching

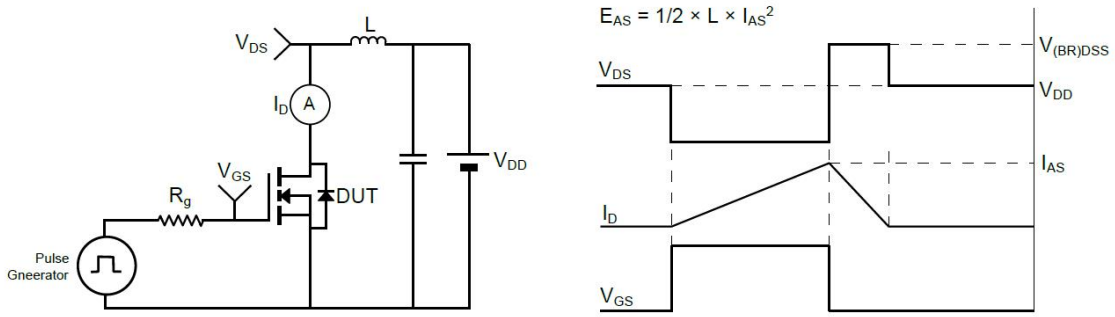

Drain-Source Body Diode Reverse Recovery

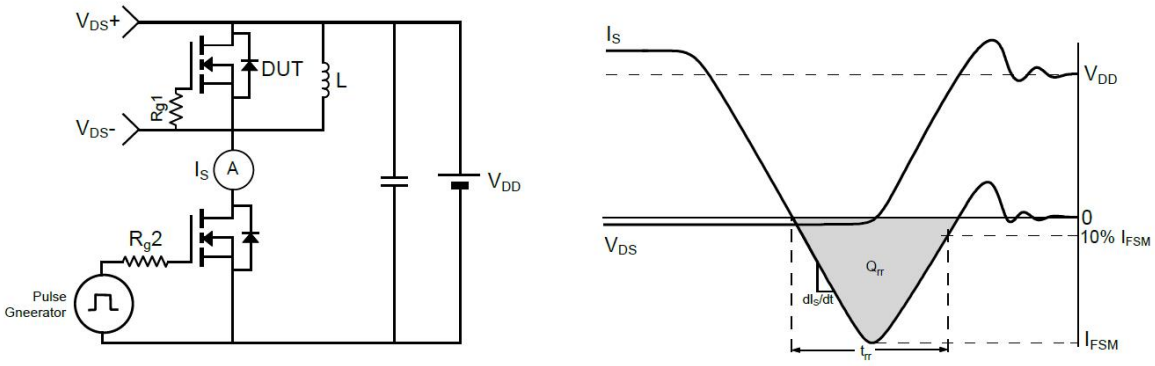

Temperature Profile for IR Reflow Soldering

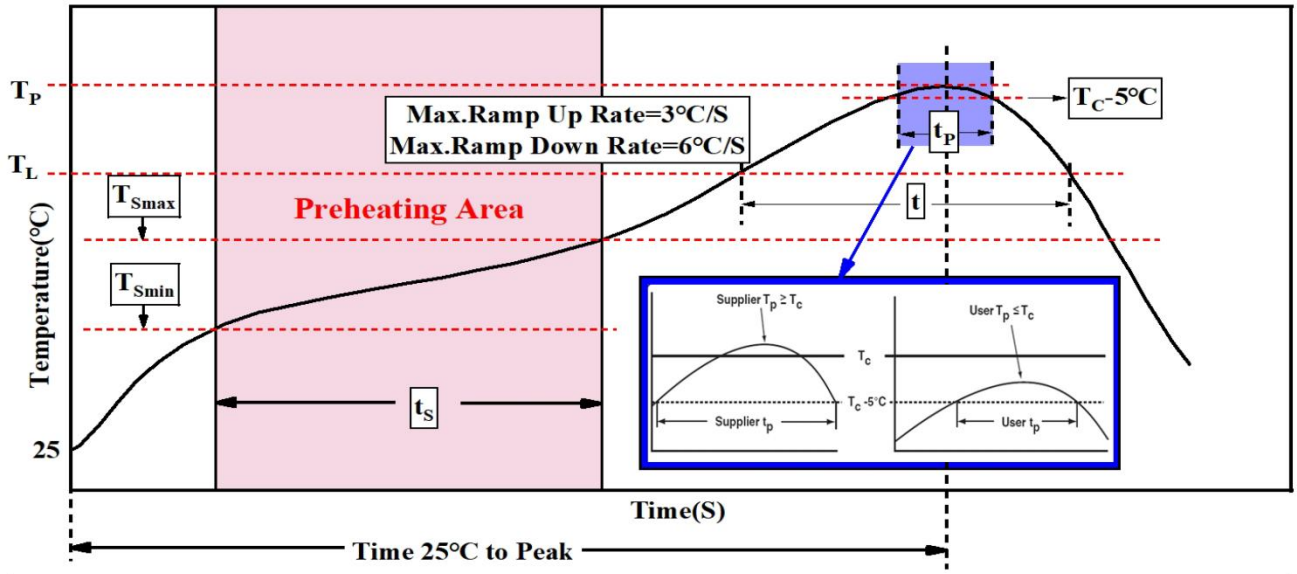

Profile Feature	Sn-Pb Eutectic Assembly	Pb-Free Assembly
Preheat & Soak Temperature min (Tsmin) Temperature max (Tsmax) Time (Tsmin to Tsmax) (ts)	 100°C 150°C 60-120 seconds	 150°C 200°C 60-120 seconds
Average ramp-up rate (Tsmax to Tp)	3 °C/second max.	3°C/second max.
Liquidous temperature (TL) Time at liquidous (tL)	183 °C 60-150 seconds	217°C 60-150 seconds
Peak package body Temperature e (Tp)*	See Classification Temp in table 1	See Classification Temp in table 2
Time (tp)** within 5°C of the specified classification temperature (Tc)	20** seconds	30** seconds
Average ramp-down rate (Tp to Tsmax)	6 °C/second max.	6 °C/second max.
Time 25°C to peak temperature	6 minutes max.	8 minutes max.
* Tolerance for peak profile Temperature (Tp) is defined as a supplier minimum and a user maximum. ** Tolerance for time at peak profile temperature (tp) is defined as a supplier minimum and a user maximum		

Table 1. SnPb Eutectic Process – Classification Temperatures (Tc)

Package Thickness	Volume mm^3 <350	Volume mm^3 ≥350
<2.5 mm	235 °C	220 °C
≥2.5 mm	220 °C	220 °C

Table 2. Pb-free Process – Classification Temperatures (Tc)

Package Thickness	Volume mm^3 <350	Volume mm^3 350-2000	Volume mm^3 >2000
<1.6 mm	260 °C	260 °C	260 °C
1.6 mm – 2.5 mm	260 °C	250 °C	245 °C
≥2.5 mm	250 °C	245 °C	245 °C

SOP8 Embossed Carrier Tape

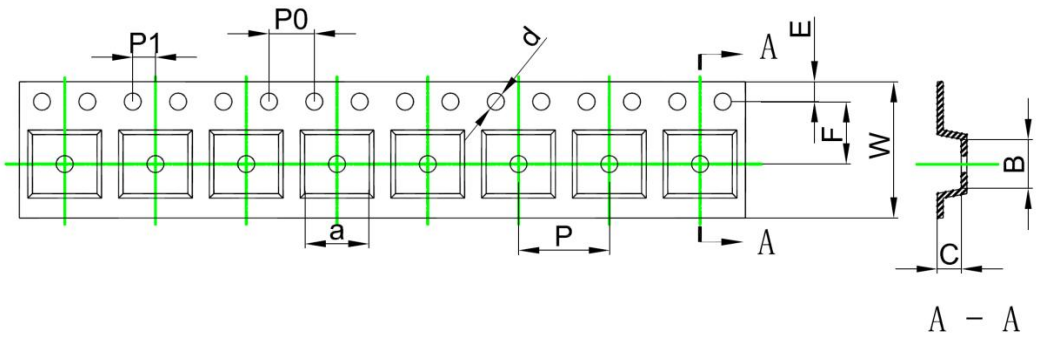

Dimensions are in millimeter										
Pkg type	a	B	c	d	E	F	P0	P	P1	W
SOP-8	6.40	5.40	2.10	Φ1.50	1.75	5.50	4.00	8.00	2.00	12.00

SOP8 Tape Leader and Trailer

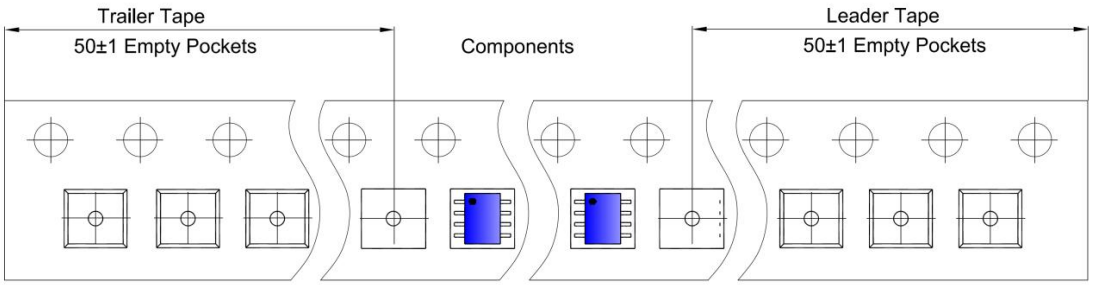

SOP8 Reel

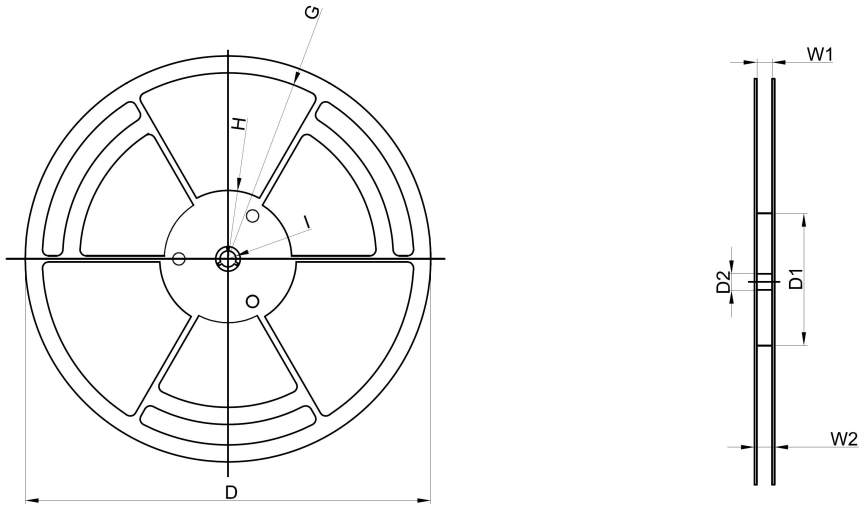

Dimensions are in millimeter								
Reel Option	D	D1	D2	G	H	I	W1	W2
13"Dia	Ø330.00	100.00	13.00	R151.00	R56.00	R6.50	12.40	17.60

REEL	Reel Size	Box	Box Size(mm)	Carton	Carton Size(mm)	G.W.(kg)
4,000 pcs	13 inch	8,000 pcs	360×360×65	40,000 pcs	565×380×390	

SOP-8L Package Information

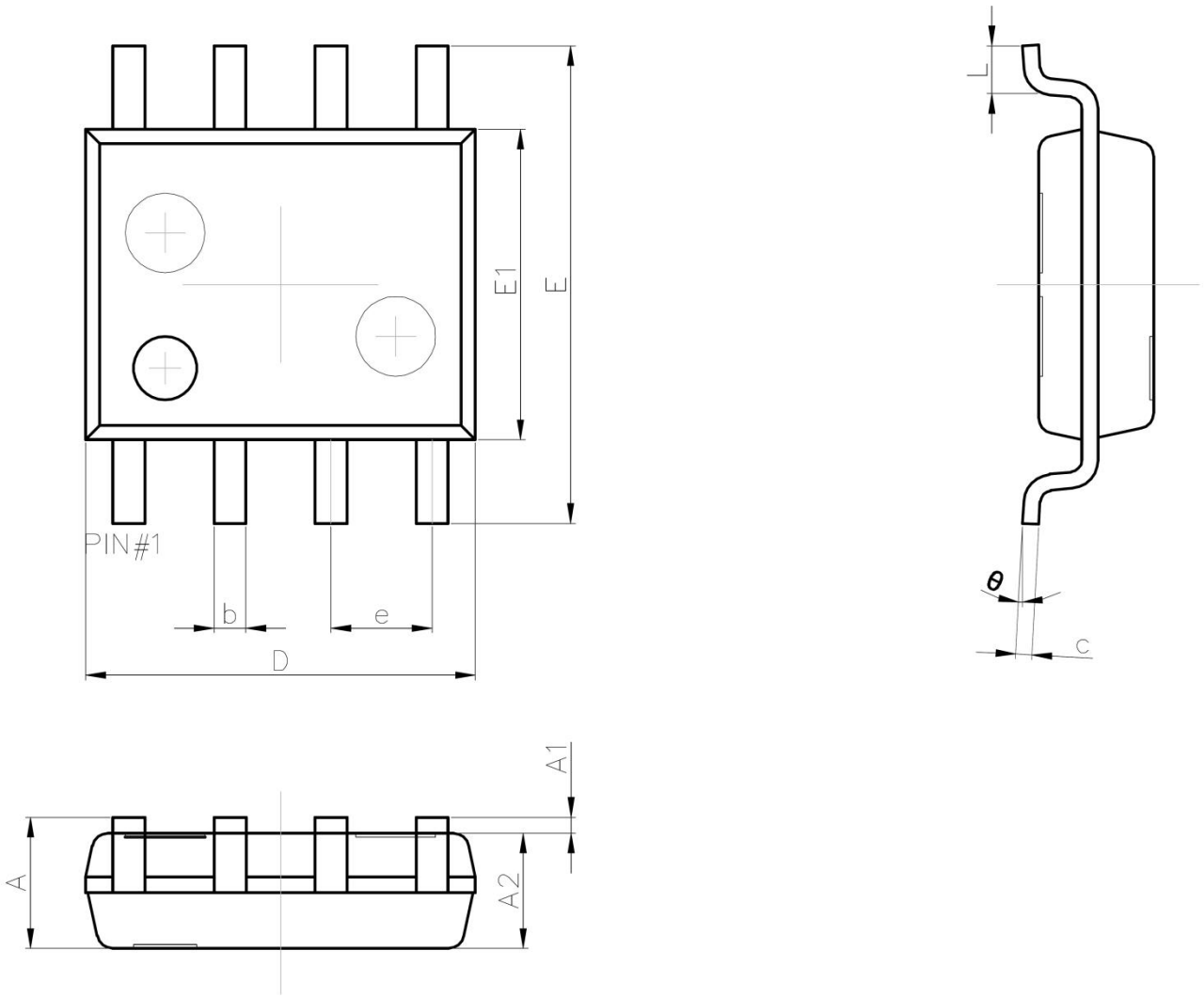

Symbol	Dimensions In Millimeters	
	Min.	Max.
A	1.35	1.75
A1	0.10	0.25
A2	1.35	1.55
b	0.33	0.51
c	0.17	0.25
D	4.80	5.00
e	1.27 REF.	
E	5.80	6.20
E1	3.80	4.00
L	0.40	1.27
θ	0°	8°