TLP521-1GB-S-HX/TLP521-1GB-P-HX Programmable Controllers AC/DC-Input Module Solid State Relay

Description

The TLP521-1GB-S-HX/TLP521-1GB-P-HX Programmable Controllers AC/DC-Input Module Solid State Relay is engineered to deliver exceptional performance and reliability in a wide range of industrial applications. With a collector-emitter voltage rating of 55 V (min), this solid-state relay ensures stable operation even under demanding voltage conditions, providing a robust solution for high-voltage switching tasks.

One of its standout features is the current transfer ratio of 50% (min), which guarantees efficient signal transfer between the input and output circuits. This high ratio enables precise control and reduces power losses, enhancing the overall energy efficiency of the system.

The relay also boasts a Rank GB rating of 100% (min), indicating its superior quality and consistent performance. This ensures that every unit meets the highest industry standards, delivering reliable and long-lasting operation in critical applications.

In terms of safety, the TLP521-1GB-S-HX/TLP521-1GB-P-HX features an isolation voltage of 2500 Vrms (min), providing a high level of electrical isolation between the input and output circuits. This isolation protects sensitive components from voltage surges and electrical noise, ensuring the integrity of the control system.

Overall, the TLP521-1GB-S-HX/TLP521-1GB-P-HX Programmable Controllers AC/DC-Input Module Solid State Relay combines high performance, reliability, and safety, making it an ideal solution for a wide range of industrial automation and control applications.

Features

- Collector-emitter voltage: 55 V (min)
- Current transfer ratio: 50% (min)

  Rank GB: 100% (min)
- Isolation voltage: 2500 Vrms (min)
- UL recognized: UL1577, file no. E67349
- c-UL recognized: CSA Component Acceptance Service No. 5A File No.E67349
- SOP-4 and DIP-4 package

Pin Configurations (top view)

TLP521-1GB-S-HX/TLP521-1GB
-P-HX

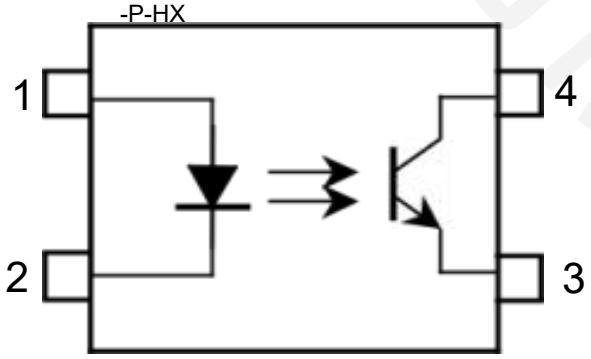

Weight: 0.26 g (typ.)

Absolute Maximum Ratings (Ta = 25°C)

Characteristic		Symbol	Rating	Unit
LED	Forward current	I_F	70	mA
	Forward current derating	ΔI_F/°C	-0.93 (Ta ≥ 50°C)	mA/°C
	Pulse forward current (100 μs pulse, 100 pps)	I_{FP}	1	A
	Reverse voltage	V_R	5	V
	Diode power dissipation	P_D	150	mW
	Diode power dissipation derating	ΔP_D/°C	-2.0 (Ta ≥ 50°C)	mW/°C
	Junction temperature	T_j	125	°C
Detector	Collector-emitter voltage	V_{CEO}	55	V
	Emitter-collector voltage	V_{ECO}	7	V
	Collector current	I_C	50	mA
	Collector power dissipation (1 circuit)	P_C	100	mW
	Collector power dissipation derating (1 circuit) (Ta ≥ 25°C)	ΔP_C/°C	-1.0	mW/°C
	Junction temperature	T_j	125	°C
Storage temperature range		T_{stg}	-55 to 125	°C
Operating temperature range		T_{opr}	-55 to 100	°C
Lead soldering temperature (10 s)		T_{sol}	260	°C
Total package power dissipation (1 circuit)		P_T	250	mW
Total package power dissipation derating (1 circuit) (Ta ≥ 25°C)		ΔP_T/°C	-2.5	mW/°C
Isolation voltage (AC, 60 s, R.H.≤ 60%) (Note 1)		BV_S	2500	Vrms

Note: Using continuously under heavy loads (e.g. the application of high temperature/current/voltage and the significant change in temperature, etc.) may cause this product to decrease in the reliability significantly even if the operating conditions (i.e. operating temperature/current/voltage, etc.) are within the absolute maximum ratings.

Note 1: Device considered a two terminal device: LED side pins shorted together and detector side pins shorted together.

Recommended Operating Conditions

Characteristic	Symbol	Min	Typ.	Max	Unit
Supply voltage	V_{CC}	—	5	24	V
Forward current	I_F	—	16	25	mA
Collector current	I_C	—	1	10	mA
Operating temperature	T_{opr}	-25	—	85	°C

Note: Recommended operating conditions are given as a design guideline to obtain expected performance of the device. Additionally, each item is an independent guideline respectively. In developing designs using this product, please confirm specified characteristics shown in this document.

Current transfer ratio

Type	Classi-fication (Note 1)	Current Transfer Ratio (%) (I_C/I_F)		Marking Of Classification
		I_F = 5mA, V_{CE} = 5V, Ta = 25°C		
		Min	Max	
TLP521-1GB-S-HX TLP521-1GB-P-HX	Blank	50	600	Blank, Y., YE, G, G., GR, B, BL, GB
	Rank Y	50	150	YE, Y.
	Rank GR	100	300	GR, G, G.
	Rank BL	200	600	BL, B
	Rank GB	100	600	GB, GR, G, G., BL, B
	Rank YH	75	150	Y.
	Rank GRL	100	200	G
	Rank GRH	150	300	G.
	Rank BLL	200	600	B

Note 1: Ex. rank GB: TLP521-1GB-S-HX/TLP521-1GB-P-HX (GB)

Note: Application type name for certification test, please use standard product type name, i.e.
TLP521-1GB-S-HX/TLP521-1GB-P-HX (GB): TLP521-1GB-S-HX/TLP521-1GB-P-HX

Electrical Characteristics (Ta = 25°C)

	Characteristic	Symbol	Test Condition	Min	Typ.	Max	Unit
LED	Forward voltage	V_F	I_F = 10 mA	1.0	1.15	1.3	V
	Reverse current	I_R	V_R = 5 V	—	—	10	μA
	Capacitance	C_T	V = 0 V, f = 1 MHz	—	30	—	pF
Detector	Collector-emitter breakdown voltage	$V_{(BR)CEO}$	I_C = 0.5 mA	55	—	—	V
	Emitter-collector breakdown voltage	$V_{(BR)ECO}$	I_E = 0.1 mA	7	—	—	V
	Collector dark current	I_{CEO}	V_{CE} = 24 V	—	10	100	nA
			V_{CE} = 24 V, Ta = 85°C	—	2	50	μA
	Capacitance (collector to emitter)	C_{CE}	V = 0 V, f = 1 MHz	—	10	—	pF

Coupled Electrical Characteristics (Ta = 25°C)

Characteristic	Symbol	Test Condition	Min	Typ.	Max	Unit
Current transfer ratio	I_C/I_F	I_F = 5 mA, V_{CE} = 5 V	50	—	600	%
		Rank GB	100	—	600	
Saturated CTR	$I_C/I_{F(sat)}$	I_F = 1 mA, V_{CE} = 0.4 V	—	60	—	%
		Rank GB	30	—	—	
Collector-emitter saturation voltage	$V_{CE(sat)}$	I_C = 2.4 mA, I_F = 8 mA	—	—	0.4	V
		I_C = 0.2 mA, I_F = 1 mA	—	0.2	—	
		Rank GB	—	—	0.4	

Isolation Characteristics (Ta = 25°C)

Characteristic	Symbol	Test Condition	Min	Typ.	Max	Unit
Capacitance (input to output)	C_S	V_S = 0 V, f = 1 MHz	—	0.8	—	pF
Isolation resistance	R_S	V_S = 500 V, R.H.≤ 60%	5×10^{10}	10^{14}	—	Ω
Isolation voltage	BV_S	AC, 60 s	2500	—	—	Vrms
		AC, 1 s, in oil	—	5000	—	
		DC, 60 s, in oil	—	5000	—	Vdc

Switching Characteristics (Ta = 25°C)

Characteristic	Symbol	Test Condition	Min	Typ.	Max	Unit
Rise time	t_r	V_{CC} = 10 V I_C = 2 mA R_L = 100Ω	—	2	—	μs
Fall time	t_f		—	3	—	
Turn-on time	t_{on}		—	3	—	
Turn-off time	t_{off}		—	3	—	
Turn-on time	t_{ON}	R_L = 1.9 kΩ (Fig.1) V_{CC} = 5 V, I_F = 16 mA	—	2	—	μs
Storage time	t_s		—	15	—	
Turn-off time	t_{OFF}		—	25	—	

Fig.1 : SWITCHING TIME TEST CIRCUIT

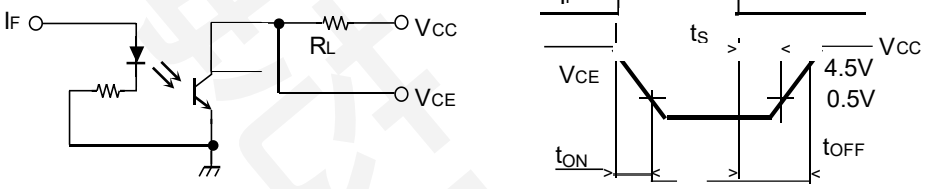

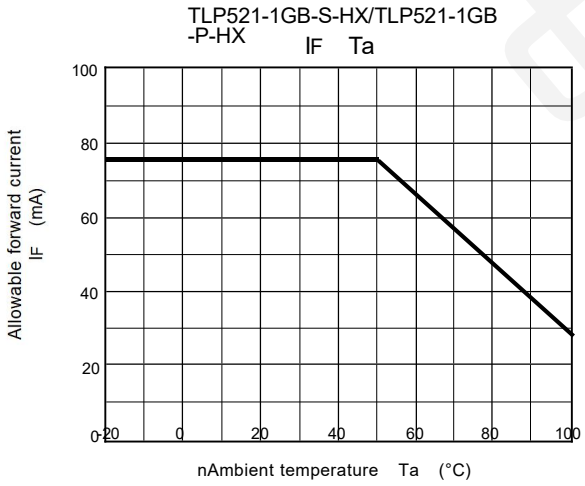

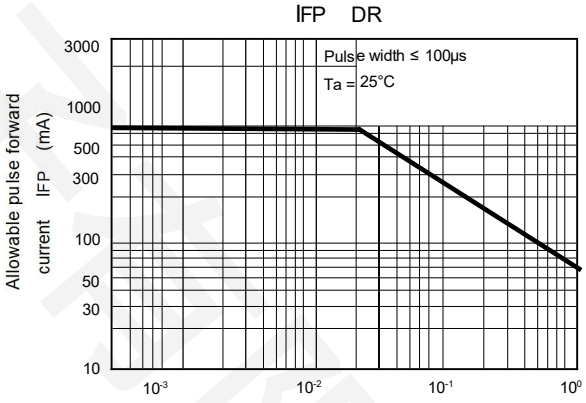

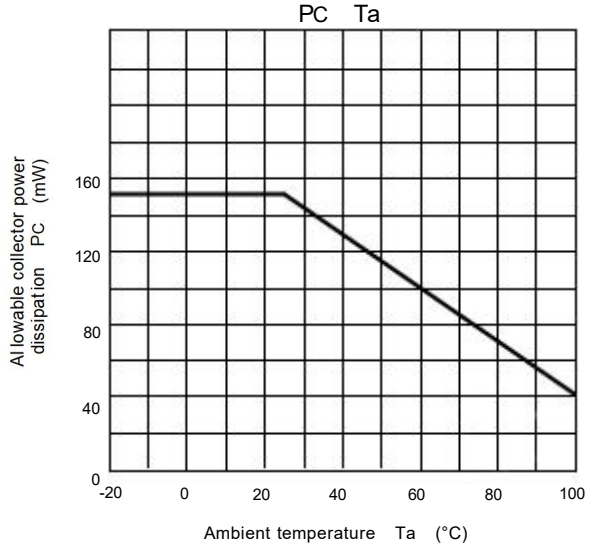

IF – VF

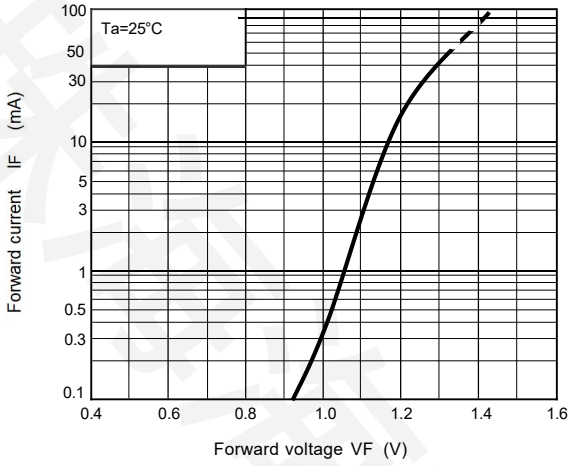

ΔVF/ΔTa – IF

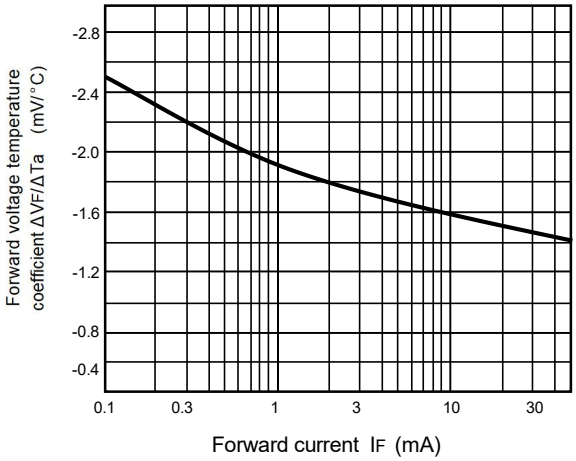

IFP – VFP

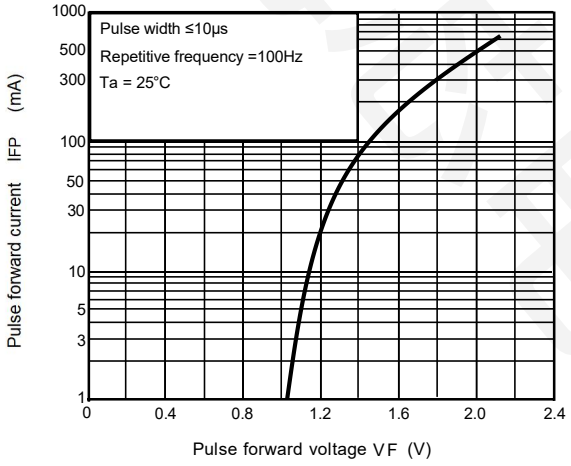

ICEO – Ta

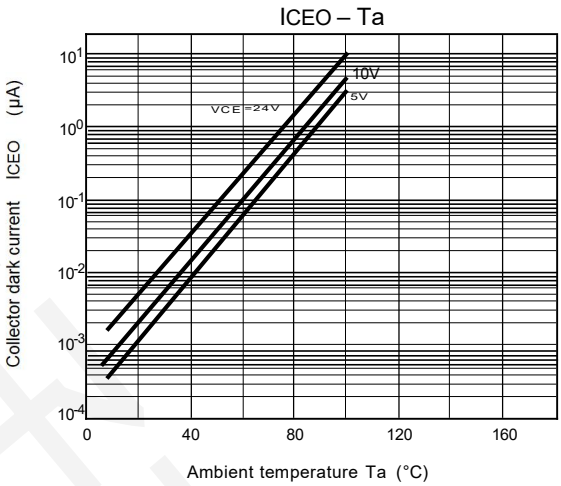

IC – VCE

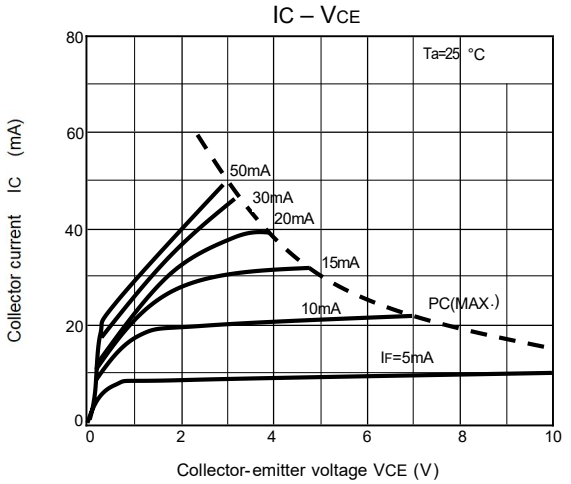

IC – VCE

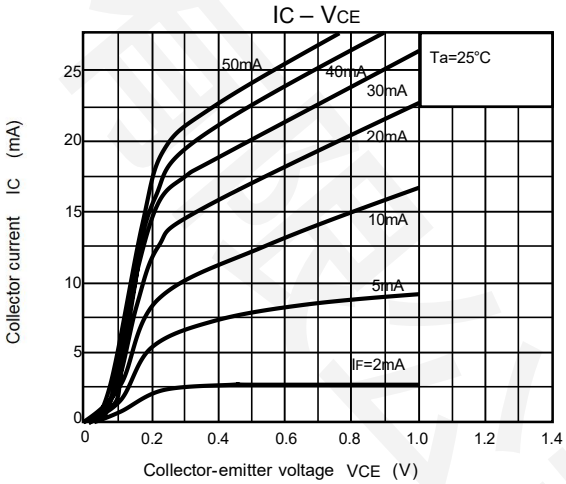

IC – IF

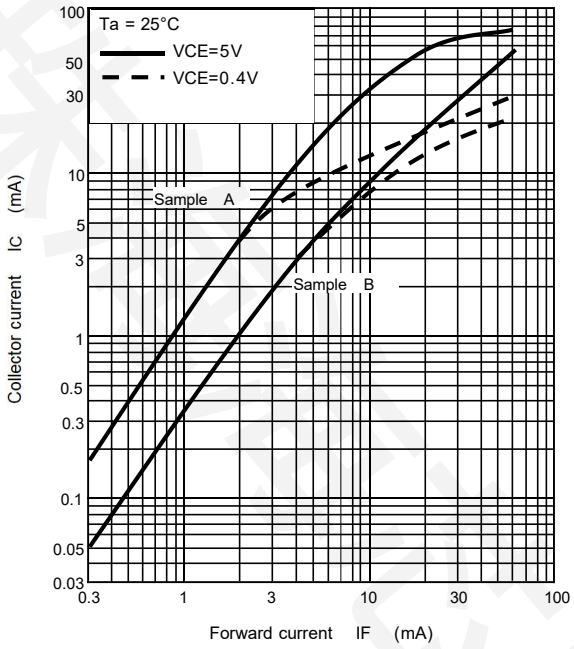

IC/IF – IF

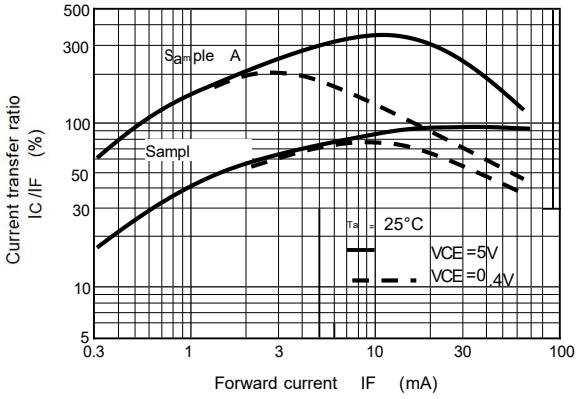

VCE(sat) – Ta

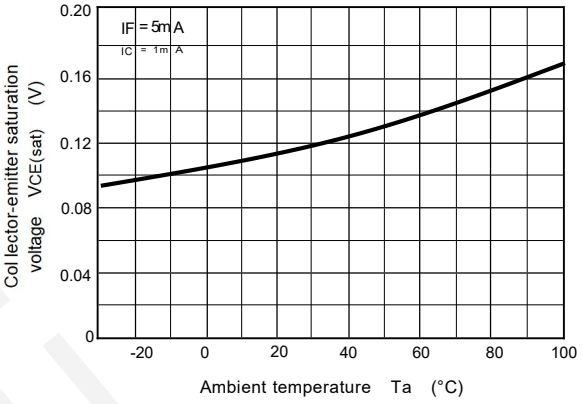

IC – Ta

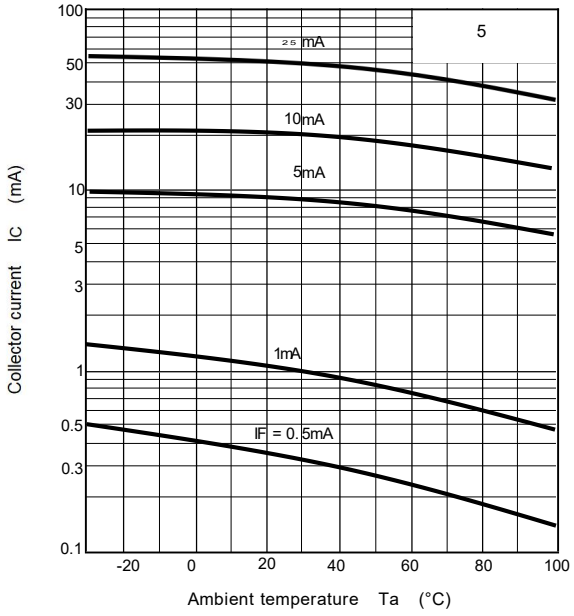

Switching Time - RL

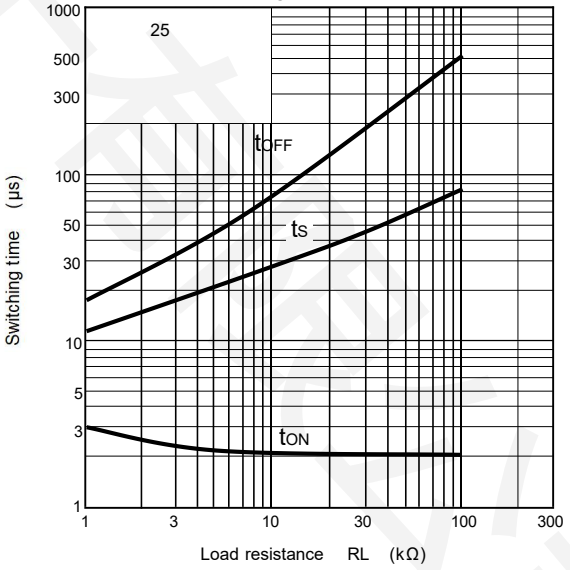

Packaging dimensions

TLP521-1GB-S-HX SOP-4

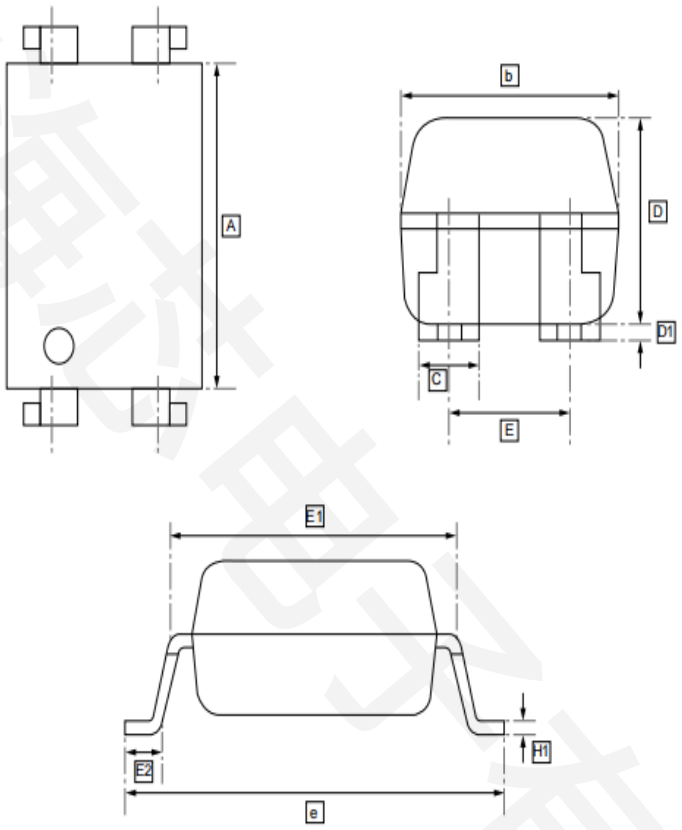

DIMENSIONS (mm are the original dimensions)

Symbol	A	b	C	D	D1	E	E1	E2	e	H1
Min	6.15	4.33	1.1	3.4	0.05	2.29	7.37	0.75	9.85	0.26
Max	6.65	4.83	1.3	3.9	0.6	2.79	7.87	1.25	10.45	

TLP521-1GB-P-HX DIP-4

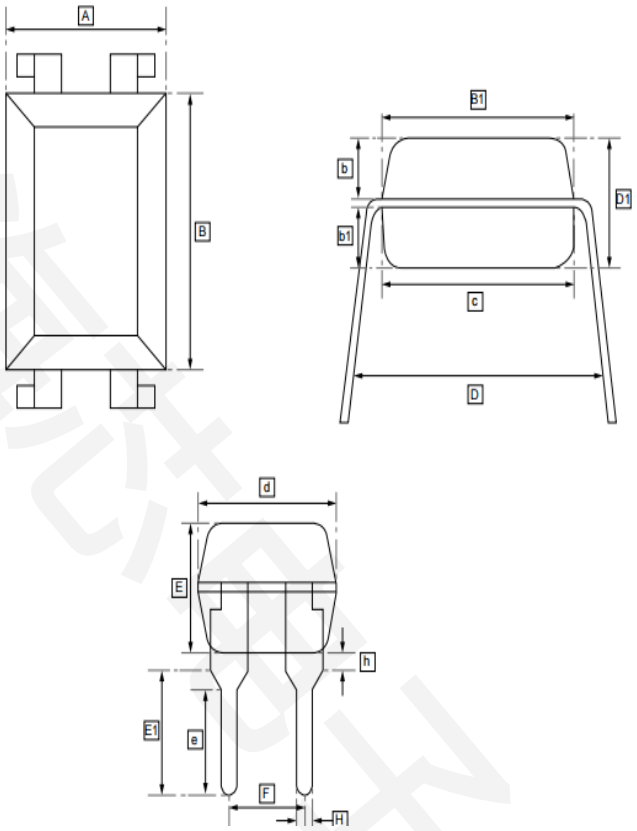

DIMENSIONS (mm are the original dimensions)

Symbol	A	B	B1	b	b1	c	D	D1	d	E	E1	e
Min	4.60	6.40	6.35	1.64	1.60	6.45	8.86	3.43	4.55	3.48	3.05	2.55
Max			6.45			6.55	9.16	3.53	4.55		3.05	3.05

Symbol	F	H	h
Min	2.29	0.50	0.50
Max	2.79		