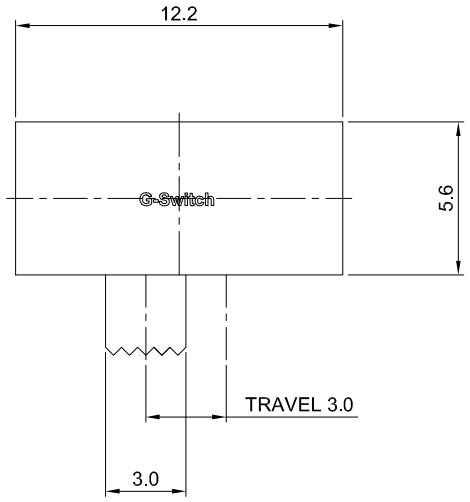

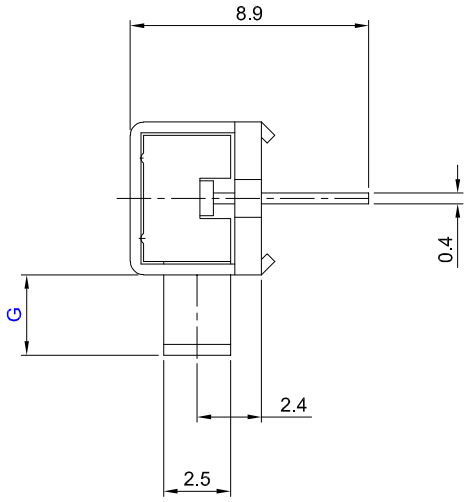

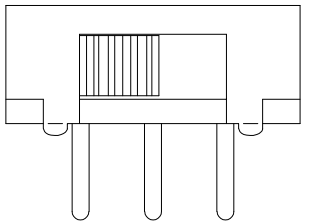

SK-12F04-GXXX

SK:Horizontal Shank

G-Switch P/N

Switch Height(mm)

G030=3.0 G040=4.0
G050=5.0 G060=6.0
G070=7.0 G080=8.0
G090=9.0 G100=10.0
G110=11.0 G120=12.0
G130=13.0 G140=14.0
G150=15.0

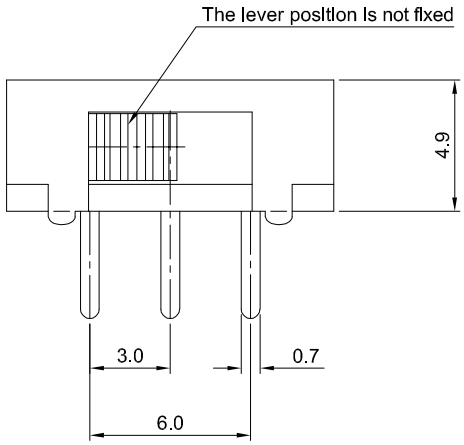

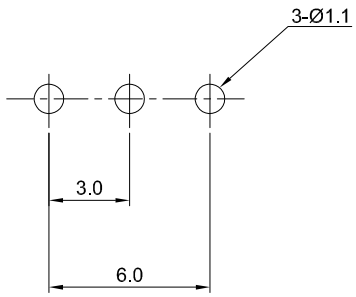

PCB REFERENCE DIAGRAM
TOLERANCE:±0.05

G-Switch Specification:

1.Operating temperature range: -40°C ~ +85°C
2.Rating: 0.3A.50V DC
3.Insulation resistance: 100MΩ min.100V DC
4.Dielectric strength: 250V AC for 1 min
5.Contact resistance: 100mΩ max.
6.Travel: 3.0±0.3mm
7.Switch lifetime: 10,000Cycles

NO.	PART NAME	MATERIAL	REMARK
6	SPRING	STEEL WIRE	
5	CONTACT	BRASS STRIP	Ag PLATED
4	TERMINAL	BRASS STRIP	Ag PLATED
3	BASE	PHENOLIC RESIN	
2	FRAME	STEEL STRIP	Ni PLATED
1	KNOB	PA66	BLACK

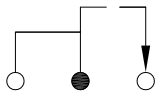

CIRCUIT DIAGRAM

Pb Process Capable
RoHS Compliant
EU RoHS Standards

SCALE: 1:1	UNIT: mm	Title:	Horizontal Slide Switch DIP 12.2×4.9×Hmm
SIZE: A4		Molde Code:	SK-12F04-GXXX

Unless otherwise General Tolerance:

X	±0.40
X.x	±0.30
X.xx	±0.20
X°	±5°
X.x°	±3°

DRAWN	CHECKED	APPROVED	DATE
Lal	Chen	Chen	2025.10.17

品赞科技 b-Switch ®
www.dg-switch.com

REV: A0 SHEET: 1/1