MCR100-8

SOT-23 SCR 可控硅

■Features 特点

1.Cathode(K) 2.Gate(G) 3.Anode(A)
PNPN Silicon Controllable rectifier 硅可控整流器
Sensitive Gate Trigger 灵敏的门极触发
Glass passivated Process 玻璃钝化工艺

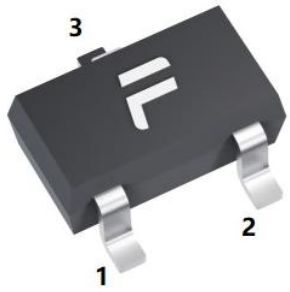

■Applications 应用

General Purpose Switching 通用开关
Solid State Relay 固态继电器
Phase Control 相位控制

■Absolute Maximum Ratings 最大额定值

Characteristic 特性参数	Symbol 符号		Value 额定值	Unit 单位
Peak Repetitive Off-State Voltage (T_J=-40℃ to 110℃,Sine Wave, 50 to 60 Hz,Gate Open) 峰值可重复断态耐压	V_{DRM},V_{RRM}	MCR100-4 MCR100-6 MCR100-8	200 400 600	V
On-State RMS Current 通态均方根电流	$I_{T(RMS)}$		0.8	A
On-State Average Current 通态平均电流	$I_{T(AV)}$		0.5	A
Peak Non-Repetitive Surge Current @25℃ 峰值不可重复浪涌电流	I_{TSM}		8	A
Circuit Fusing Considerations(t=10ms) 电路保险指数	I^2t		0.35	A^2s
Peak Gate Current-Forward (Pulse Width ≤1 us) 正向门极峰值电流	I_{GM}		1	A
Peak Gate Voltage-Reverse (Pulse Width ≤ 1 μs) 反向门极峰值电压	V_{GRM}		5	V
Forward Peak Gate Power (Pulse Width ≤ 1 μs) 正向门极峰值功率	P_{GM}		0.1	W
Forward Average Gate Power (t=8.3ms) 正向门极平均功率	$P_{G(AV)}$		0.1	W
Operating Junction/Storage Temperature 结温和储存温度	T_{stg}		-40~125	℃

■Electrical Characteristics 电特性

(T_A=25℃ unless otherwise noted 如无特殊说明，温度为 25℃)

Characteristic Parameters 特性参数	Symbol 符号	Min 最小值	Max 最大值	Unit 单位	Condition 条件
Peak Forward Blocking Current 峰值正向漏电流	I_{DRM}	Tc=25℃ Tc=110℃	5 100	μA	$V_D=V_{DRM}$
Peak Reverse Blocking Current 峰值反向漏电流	I_{RRM}	Tc=25℃ Tc=110℃	5 100	μA	$V_R=V_{RRM}$
Peak Forward On-State Voltage 峰值正向通态电压	V_{TM}		1.6	V	I_{TM}=1A
Gate Trigger Current 触发电流	I_{GT}	5	200	μA	V_{AK}=7V
Gate Trigger Voltage 触发电压	V_{GT}		0.8	V	I_{TM}=0.8A
Holding Current 维持电流	I_H		3	mA	I_T=50mA
Latch Current 擎住电流	I_L		5	mA	$I_G=1.2I_{GT}$
Off-state Voltage Change 断态电压临界上升率	dv/dt	10		V/μS	$V_D=2/3V_{DRM}$
Gate Nun Trigger Voltage 门极不触发电压	V_{GD}	0.1		V	$V_D=V_{DRM}$

■Device Marking 产品打标

Type	MCR100-4	MCR100-6	MCR100-8
Mark	100-4	100-6	100-8

■Dimension 外形封装尺寸

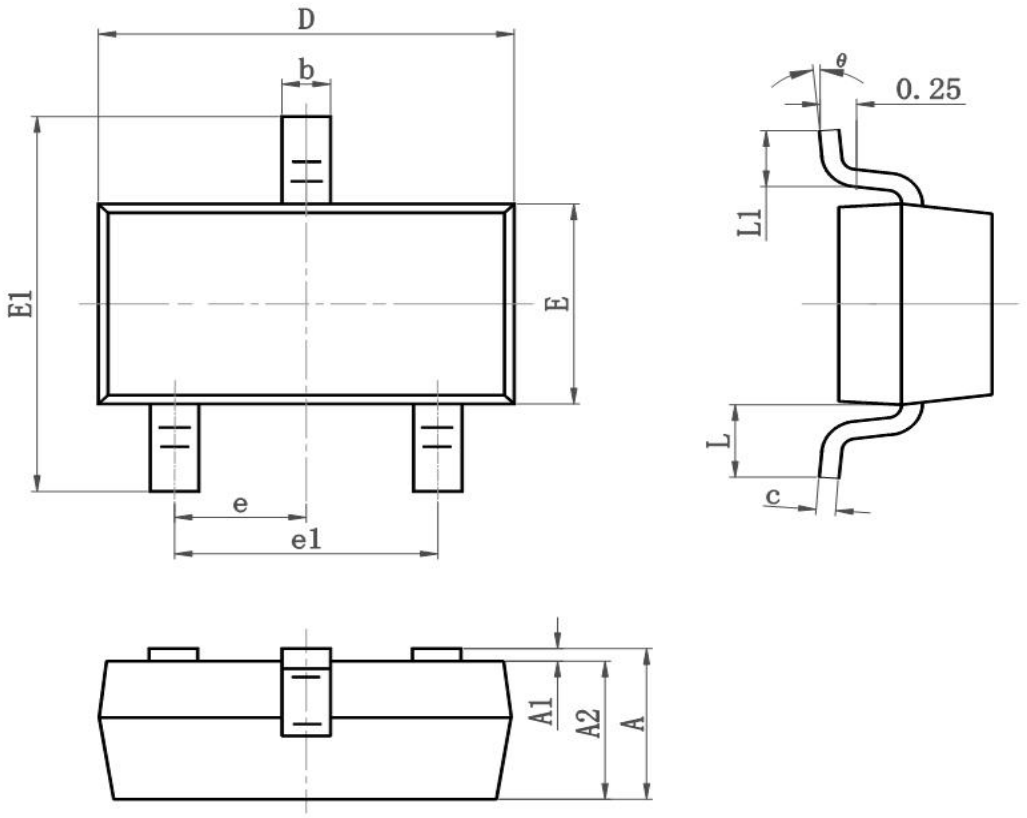

Symbol	Dimensions In Millimeters		Dimensions In Inches	
	Min	Max	Min	Max
A	0.900	1.150	0.035	0.045
A1	0.000	0.100	0.000	0.004
A2	0.900	1.050	0.035	0.041
b	0.300	0.500	0.012	0.020
c	0.080	0.150	0.003	0.006
D	2.800	3.000	0.110	0.118
E	1.200	1.400	0.050	0.055
E1	2.250	2.550	0.089	0.100
e	0.900	1.00	0.035	0.039
e1	1.800	2.000	0.071	0.079
L	0.500	0.600	0.020	0.024
L1	0.300	0.500	0.012	0.020
θ	0°	8°	0°	8°