# 深圳市晶科鑫实业有限公司

# 样品承认书

| | | |
|---|---|---|
| 客户代码： | | |
| 物料名称： | 贴片晶振 | |
| 规格型号： | 2016 MEMS OSC 11.2896MHZ 1.8～3.3V -40~85℃ LVCMOS | |
| P N/ SJK： | 1NM11289AC33YC | |
| 环保属性： | ■RoHS ■REACH ■HF □PAHS □其它 | |
| 版 次： | A1 2017-5-10 初版 | 最小包装： 3000pcs/real |
| 湿敏等级： | 一级 | |

| 承 认 签 章 | | | | | |
|---|---|---|---|---|---|
| 供 应 商 承 认 | | | （ ）公 司 承 认 | | |
| 制定 | 审 核 | 核 准 | 工 程 师 | 审 核 | 批 准 |
| 贺丹斌 | 李相同 | 刘惠光 | | | |
| SJK 支持 | | | 盖章签署 | | |
| FAE_EMAIL | | | 日 期 | | |
| 日 期 | | | 批示： □接受 □有条件接受 | | |
| 备注: | | | | | |

电话：0755-82507042 传真：0755-88353718 http://www.q-crystal.com.cn
公司地址: 深圳市龙岗区天安云谷产业园一期 3 栋 C 座 12 楼 1204～1206 室

## 1. ELECTRICAL SPECIFICATIONS

### Standard atmospheric conditions

Unless otherwise specified, the standard range of atmospheric conditions for making measurement and tests are as follow:

Ambient temperature : 25±5℃

Relative humidity : 40%~70%

If there is any doubt about the results, measurement shall be made within the following limits:

Ambient temperature : 25±3℃

Relative humidity : 40%~70%

### Measure equipment

Electrical characteristics measured by MD 37WX-05M or equivalent.

### Crystal cutting type

The crystal is using AT CUT (thickness shear mode).

| | Parameters | | SYM | Electrical Spec. | | | | Notes |
|---|---|---|---|---|---|---|---|---|
| | | | | MIN | TYPE | MAX | UNITS | |
| 1 | Nominal Frequency | | | 11.289600 | | | MHZ | |
| 2 | Frequency Stability | AT 25℃ | | ±10 | | | PPM | |
| | | Over Operating Temperature range | | ±15 | | | PPM | |
| 3 | Operating Temperature | | Topr | -40 | 25 | 85 | ℃ | |
| 4 | Storage Temperature | | Tstg | -55 | ~ | 125 | ℃ | |
| 5 | Supply Voltage | | VDD | 3.3 ±10% | | | V | 1.62~3.63V |
| 6 | Input Current | | Icc | | | 10 | mA | |
| 7 | Enable Control | | | Yes | | | | Pad1 |
| 8 | Output Load : CMOS | | CL | 15 | | | pF | |
| 9 | Output Voltage High | | VoH | 90% Vdd | | | V | |
| 10 | Output Voltage Low | | VoL | | | 10% Vdd | V | |
| 11 | Rise Time | | Tr | | | 5 | ns | 10%→ 90%VDD Level |
| 12 | Fall Time | | Tf | | | 5 | ns | 90%→ 10%VDD Level |
| 13 | Symmetry (Duty ratio) | | TH/T | 45 | ~ | 55 | % | |
| 14 | Start-up Time | | Tosc | | | 10 | ms | |
| 15 | Enable Voltage High | | Vhi | 70% Vdd | | | V | |
| 16 | Disable Voltage Low | | Vlo | | | 30% Vdd | V | |
| 17 | Aging | | | ±3 | | | ppm/yr. | 1st. Year at 25℃ |
| 18 | Output Disable Delay Time | | T off | | | 150 | us | |
| 19 | Output Enable Delay Time | | T on | | | 150 | us | |

| | | | | | | | |
|---|---|---|---|---|---|---|---|
| 20 | Phase Jitter （12KHZ~20MHZ） | | | 0.5 | 1.0 | ps | |

## 2. DIMENSIONS (Units :mm)

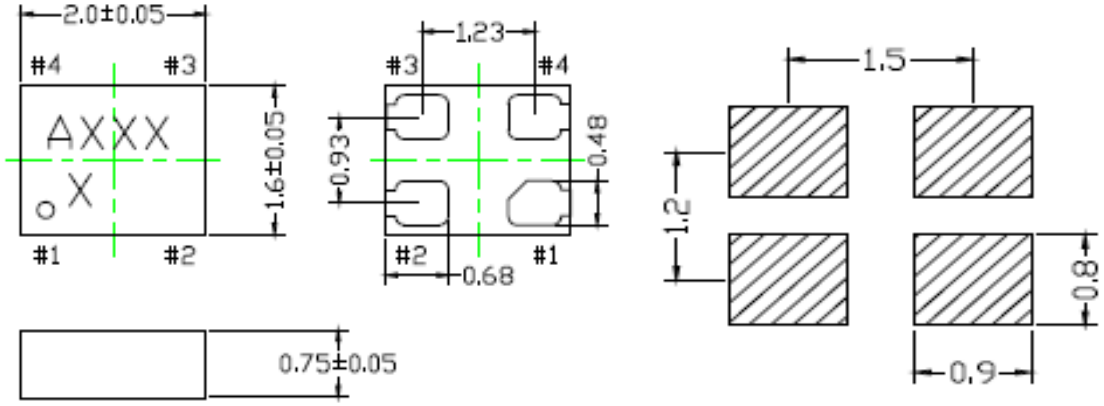


## 3. MARKING

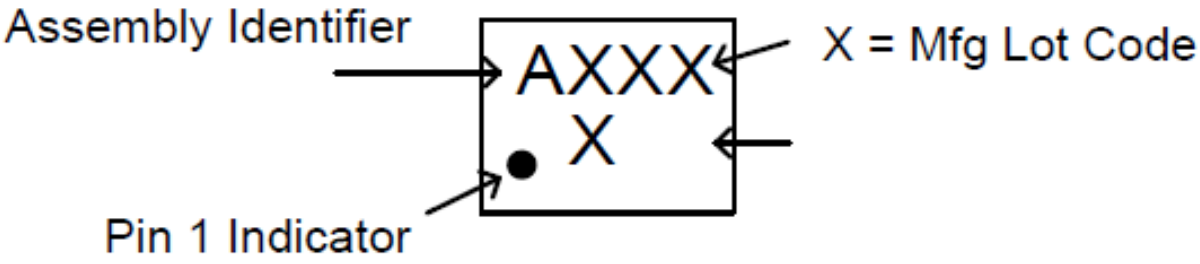


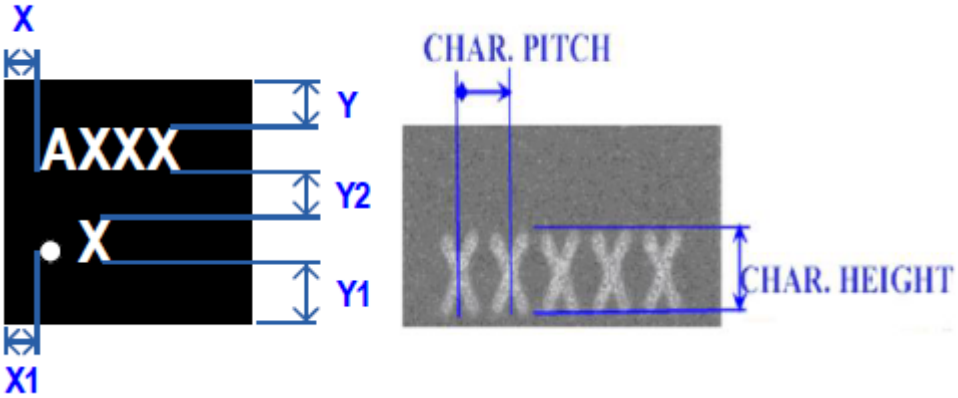

**Table 1. Marking Dimensions for Package Type**

| Package | X | X1 | Y | Y1 | Y2 | Char Height | Char Pitch | Pin 1 Dot diameter |
|---|---|---|---|---|---|---|---|---|
| 2.0 x 1.6 | 0.33 | 0.33 | 0.28 | 0.28 | 0.15 | 0.40 | 0.35 | 0.20 |

## 4. TEST CIRCUIT

Control input (output enable/disable)
Logic 1 or open on pad 1: Oscillator output
Logic 0 on pad 1 : Disable output to high impedance

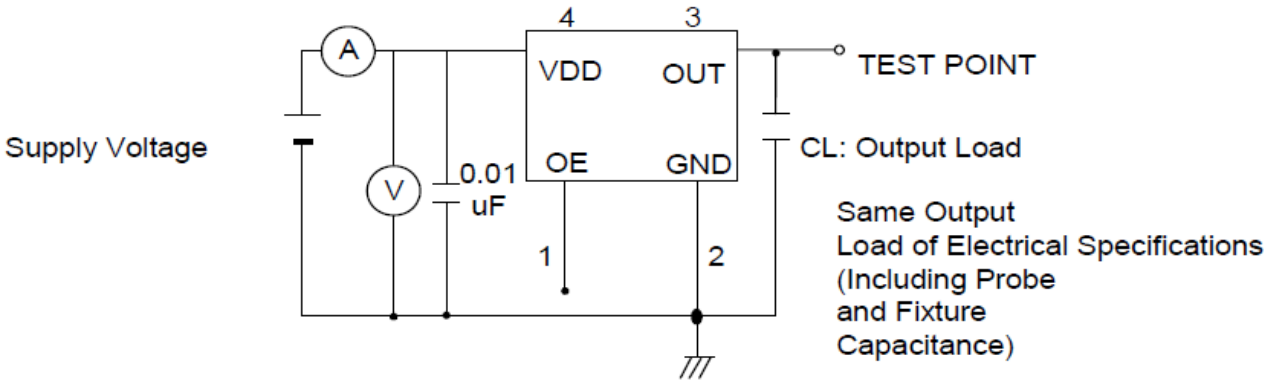


## 5. WAVEFORM CONDITIONS

Waveform measurement system should have a min. bandwidth of 5 times the frequency being tested.

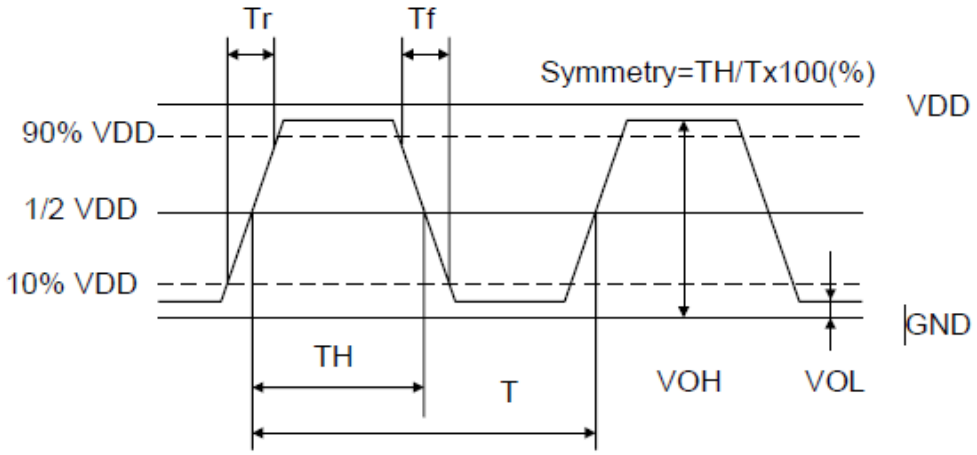


## 6. OUTPUT ENABLE / DISABLE DELAY

The following figure shows the oscillator timing during normal operation . Note that when the device is in standby,
the oscillator stops. When standby is released, the oscillator starts and stable oscillator output occurs after a short delay

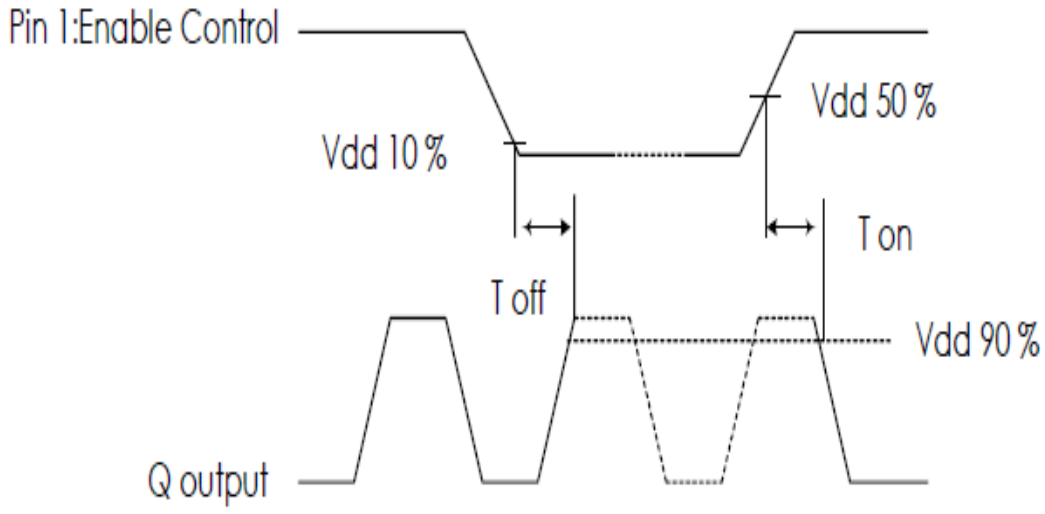


## 8. SUGGESTED REFLOW PROFILE

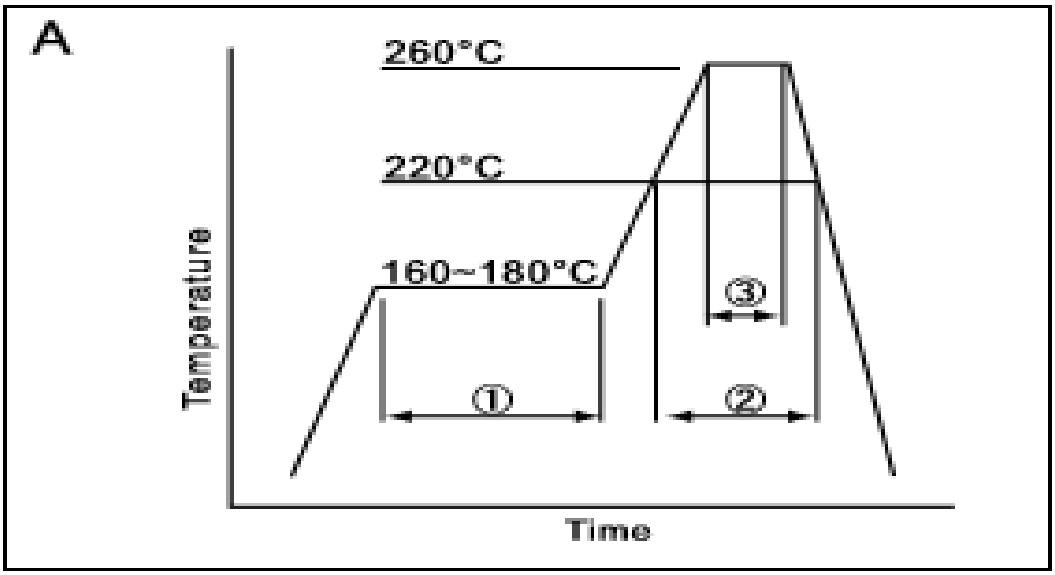


| | | | |
|---|---|---|---|
| ① | Preheat | 160~180°C | 120sec. |
| ② | Primary heat | 220°C | 60sec. |
| ③ | Peak | 260°C | 10sec. max |

Total time : 200 sec. Max / Solder melting point :220 ℃

## 7. RELIABILITY TEST SPECIFICATION

### 1.Mechanical Endurance

| No. | Test Item | Test Methods | REF. DOC |
|---|---|---|---|
| **1** | Drop Test | 75 cm height,3 times on concrete floor . | JIS C6701 |
| **2** | Mechanical Shock | Device are shocked to half sine wave ( 1000 G ) three mutually perpendicular axes each 3 times. 0.5m sec. duration time | MIL-STD-202F |
| **3** | Vibration | Frequency range 10 ~ 2000 Hz<br>Amplitude 1.52 mm/20G<br>Sweep time 20 minutes<br>Perpendicular axes each test time 4 Hrs<br>(Total test time 12 Hrs) | MIL-STD-883E |
| **4** | Gross Leak | Standard Sample For Automatic Gross Leak Detector, Test Pressure: 2kg / cm2 | MIL-STD-883E |
| **5** | Fine Leak | Helium Bomging 4.5 kgf / cm 2 for 2 Hrs | |
| **6** | Solderability | Temperature 245 ℃ ± 5℃<br>Immersing depth 0.5 mm minimum<br>Immersion time 5 ± 1 seconds<br>Flux Rosin resin methyl alcohol solvent ( 1 : 4 ) | MIL-STD-883E |

### 2.Environmental Endurance

# Si MEMS OSCILLATOR

***SERIES 1NM, EPOXY MOLDING 2.0X1.6MM SURFACE MOUNT PACKAGE***

| No. | Test Item | Test Methods | REF. DOC |
|---|---|---|---|
| 1 | Resistance To Soldering Heat | Pre-heat temperature 125 ℃<br>Pre-heat time 60 ~ 120 sec.<br>Test temperature 260 ± 5 ℃<br>Test time 10 ± 1 sec. | MIL-STD-202F |
| 2 | High Temp. Storage | + 125 ℃ ± 3 ℃ for 1000 ± 12 Hrs | MIL-STD-883E |
| 3 | Low Temp. Storage | - 40 ℃ ± 3 ℃ for 1000 ± 12 Hrs | |
| 4 | Thermal Shock | Total 100 cycles of the following temperature cycle<br>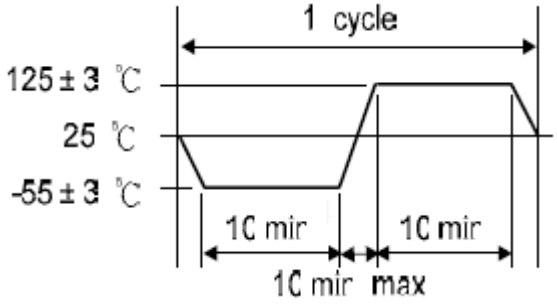 | MIL-STD-883E |
| 5 | Pressure Cooker Storage | 121 ± 3℃ , RH100% , 2 bar , 240 Hrs | JIS C6701 |
| 6 | High Temp&Humidity | 85℃ ± 3℃, RH 85% , 1000 Hrs | JIS C5023 |

电话：0755-82507042 传真：0755-88353718 http://www.q-crystal.com.cn
公司地址: 深圳市龙岗区天安云谷产业园一期 3 栋 C 座 12 楼 1204～1206 室