


4 POLE PLUG CONTACT DETAILS

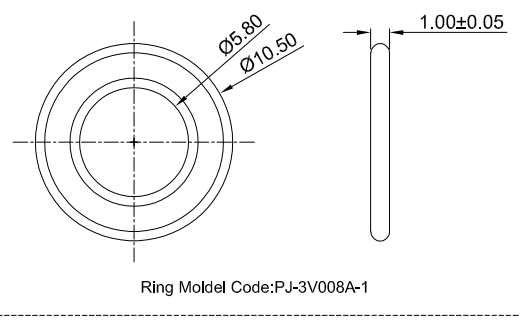


Ring Moldel Code:PJ-3V008A-1

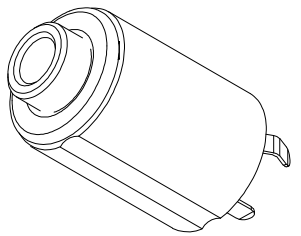

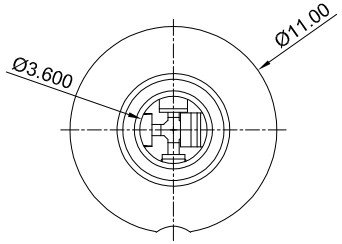


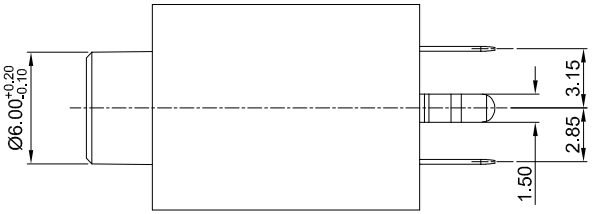


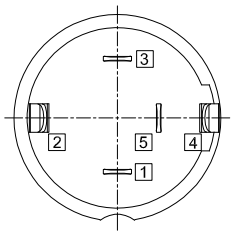


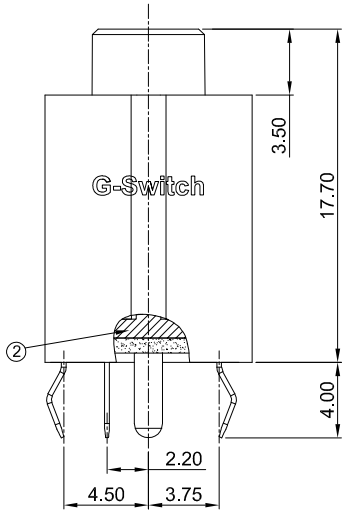


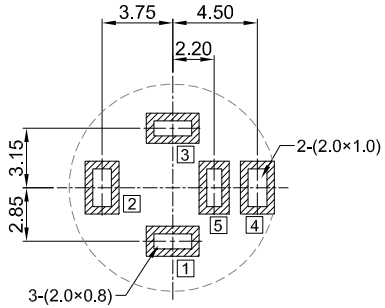


PCB REFERENCE DIAGRAM
TOLERANCE:±0.05

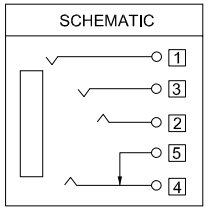


□ :TERMINAL NO.

PJ-3 V 008 A-4 N S D 01

- **Type**: PJ=Phone Jack
- **Specification**: 3=Ø3.5mm
- **Angle**: V=180°
- **Serial code**
- **Detail**
- **Number Of Contacts**: 4=TRRS
- **Housing Colour**: N=Black
- **Contact Plated**: S=Sn
- **Termipoint**: D=DIP
- **Other**

**G-Switch Specification:**

1.Rated load：1A
2.Insulation resistance: 100MΩ min
3.Withstand voltage: 500V AC/min
4.Contact resistance: 30mΩ max
5.Durability cycle: 5,000 Cycles
6.Insertion and extraction force: 3-30N
7.Operating temperature range: -40°C ~ +85°C
8.Waterproof grade: IPX8

| NO. | DESCRIPTION | QTY | MATERIAL | PLATED & COLOR |
|---|---|---|---|---|
| 8 | GLUE | 1 | -- | BLACK |
| 7 | TERMINAL 5 | 1 | BRASS | Sn PLATED |
| 6 | RING SPRING-2 4 | 1 | PHOSPHOR BRONZE | Sn PLATED |
| 5 | RING SPRING-1 3 | 1 | PHOSPHOR BRONZE | Sn PLATED |
| 4 | TIP SPRING 2 | 1 | PHOSPHOR BRONZE | Sn PLATED |
| 3 | EARTH SPRING 1 | 1 | PHOSPHOR BRONZE | Sn PLATED |
| 2 | COVER | 1 | PBT | BLACK UL 94V-0 |
| 1 | HOUSING | 1 | PBT | BLACK UL 94V-0 |

IPX7
1m/30min

RoHS Compliant
EU RoHS Standards

| | | | |
|---|---|---|---|
| SCALE: 1:1 | UNIT: mm | Title: | IPX7 Vertical Ø3.5mm Phone Jack<br>NC 5Pin H=17.70mm DIP |
| SIZE: A4 | | Moldel Code: | PJ-3V008A-4NSD01 |

Unless otherwise General tolerance:
X. ±0.40
X.x ±0.30
X.xx ±0.20
X.xxx ±0.10
Angles ±3°

| DRAWN | CHECKED | APPROVED | DATE |
|---|---|---|---|
| Wu | Xia | Chen | 2025.09.05 |

品赞科技 G-Switch ®
www.dg-switch.com

REV: A0 SHEET: 1/1