Super Fast Rectifiers

1 General Description

1.1 Features

- Glass passivated chip junctions
- Super fast recovery time for switching mode application
- High Forward Surge Capability
- Low Reverse Current
- Lead free in compliance with EU RoHS 2011/65/EU directive

REVERSE VOLTAGE
100-600V
FORWARD CURRENT
20Ampere

1.2 Typical Applications

- Switch power supply
- UPS
- Antiparalle diode for high frequency switching devices

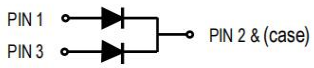

1.3 Mechanical Data

- Circuit figure: Common Cathode
- Leads:Solderablepermil-std-202,Method 208
- Polarity:as marked
- Mounting torque:5in-lbs maximum
- Terminals:Pure tin plated
- Weight: TO-220AB 1.85 grams
  ITO-220AB 1.70 grams
  TO-262AB 1.45 grams
  TO-263(D2PAK) 1.35 grams

PACKAGE	DEVICE
TO-220AB	MUR20XXCT
ITO-220AB	MURF20XXCT
TO-262AB	MURW20XXCT
TO-263(D2PAK)	MURD20XXCT

2 Maximum Ratings(TA=25℃ Unless otherwise specified)

PARAMETER		SYMBOL	MUR2010CT MURF2010CT MURW2010CT MURD2010CT	MUR2020CT MURF2020CT MURW2020CT MURD2020CT	MUR2030CT MURF2030CT MURW2030CT MURD2030CT	MUR2040CT MURF2040CT MURW2040CT MURD2040CT	MUR2050CT MURF2050CT MURW2050CT MURD2050CT	MUR2060CT MURF2060CT MURW2060CT MURD2060CT	UNIT
Maximum Repetitive Reverse Voltage		V_{RRM}	100	200	300	400	500	600	V
Maximum RMS Voltage		V_{RMS}	70	140	210	280	350	420	V
Maximum DC Blocking Voltage		V_{DC}	100	200	300	400	500	600	V
Maximum Average Forward Current		$I_{F(AV)}$	20						A
Peak Forward Surge Current 8.3 ms Single Half Sine-wave Superimposed on rated load		I_{FSM}	300						A
Operating Junction Temperature Range		T_J	-55 to +150						℃
Storage Temperature Range		T_{STG}	-55 to +150						℃
Thermal Resistance Per Diode (Note1)	TO-220AB	$R_{\theta JC}$	2.5						°C/W
	ITO-220AB		4.0						
	TO-262AB		2.5						
	TO-263		2.5						

Notes:
1. Thermal resistance from junction to case.
2. Test conditions: I_F=0.5A, I_R=1.0A, I_{RR}=0.25A.

3 Electrical Characteristics(TA=25℃ Unless otherwise specified)

PARAMETER		SYMBOL	MUR2010CT MURF2010CT MURW2010CT MURD2010CT	MUR2020CT MURF2020CT MURW2020CT MURD2020CT	MUR2030CT MURF2030CT MURW2030CT MURD2030CT	MUR2040CT MURF2040CT MURW2040CT MURD2040CT	MUR2050CT MURF2050CT MURW2050CT MURD2050CT	MUR2060CT MURF2060CT MURW2060CT MURD2060CT	UNIT
Typical Forward Voltage per leg at 10A		V_F	1.00		1.30		1.70		V
Typical reverse recovery time(Note 2)		t_{rr}	35						nS
Reverse Current at Rated DC Blocking Voltage	Tj =25℃	I_R	5						μA
	Tj=125℃		250						

4 Characteristics Curves(TA=25℃ Unless otherwise specified)

FIG. 1 - TYPICAL FORWARD CURRENT DERATING CURVE

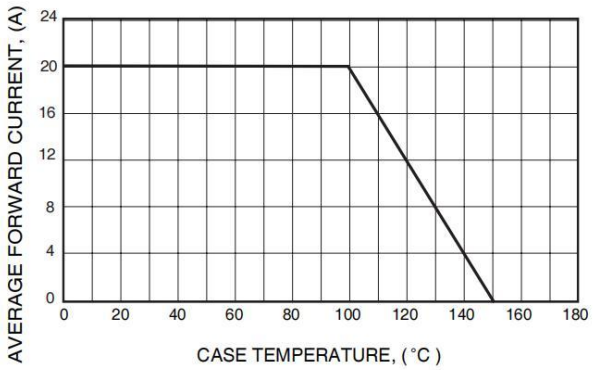

FIG. 2 - MAXIMUM NON-REPETITIVE FORWARD SURGE CURRENT

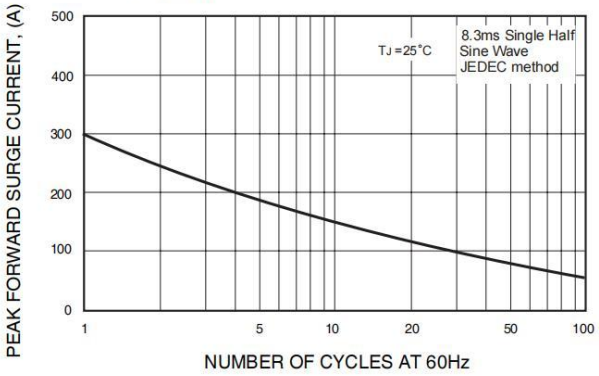

FIG. 3-TYPICAL REVERSE CHARACTERISTICS

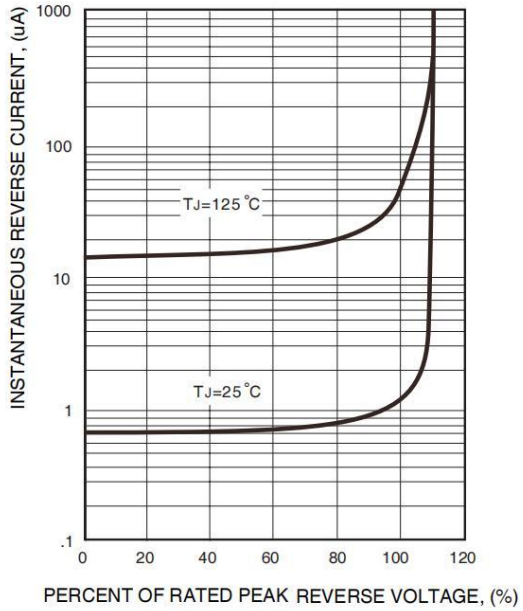

FIG. 4-TYPICAL INSTANTANEOUS FORWARD CHARACTERISTICS

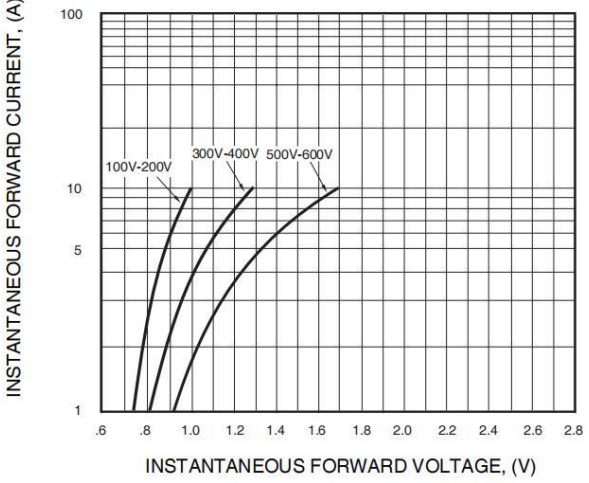

FIG.6- TEST CIRCUIT DIAGRAM AND REVERSE RECOVERY TIME CHARACTERISTICS

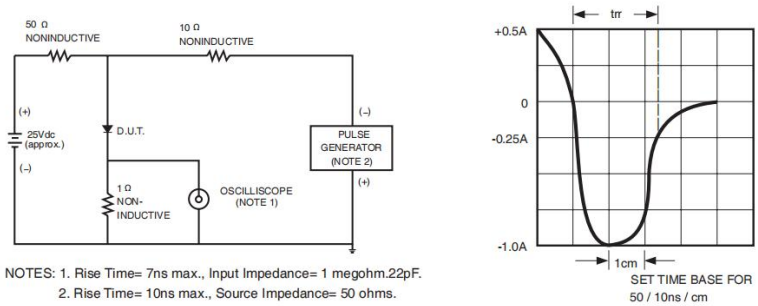

NOTES: 1. Rise Time= 7ns max., Input Impedance= 1 megohm.22pF.
2. Rise Time= 10ns max., Source Impedance= 50 ohms.

5 Package Outline Dimensions

(1) TO-220AB Package Dimensions(Unit: mm):

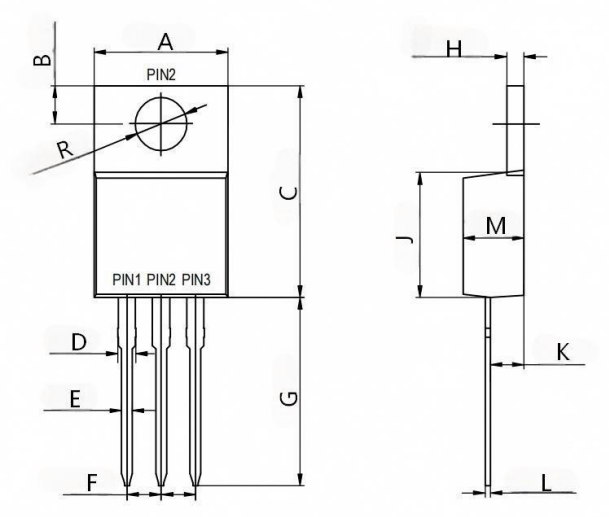

Symbol	Millimeters	
	Min	Max
A	9.80	10.20
B	2.59	2.89
R	3.69	3.99
C	14.95	15.55
D	1.10	1.50
E	0.60	1.00
F	2.44	2.64
G	13.30	13.90
H	1.17	1.37
J	8.80	9.20
M	4.30	4.70
K	2.30	2.70
L	0.28	0.48

(2) ITO-220AB Package Dimensions(Unit: mm):

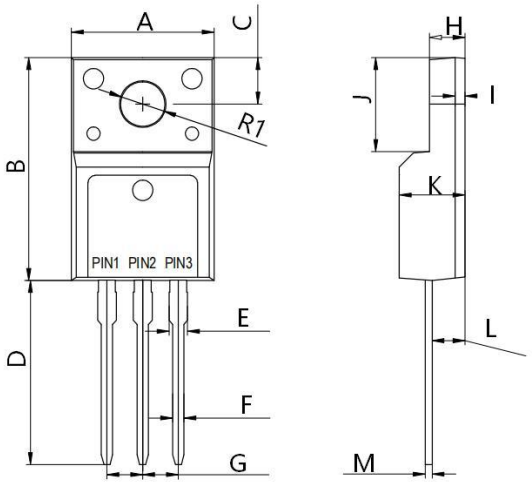

Symbol	Millimeters	
	Min	Max
A	9.96	10.36
B	15.55	16.35
R1	3.05	3.35
C	3.15	3.45
D	2.70	3.10
E	1.10	1.50
F	0.60	1.00
G	2.44	2.64
H	2.35	2.75
J	6.48	6.88
K	4.50	4.90
I	0.70Typ	
L	2.15	2.55
M	0.40	0.60

(3) TO-262AB Package Dimensions(Unit: mm):

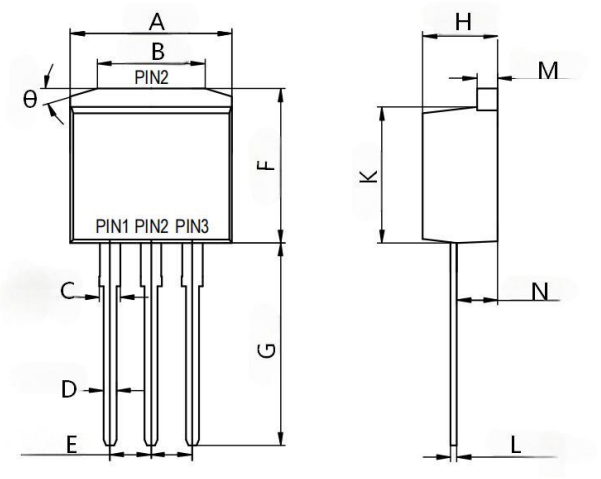

Symbol	Millimeters	
	Min	Max
A	9.80	10.20
B	6.40	7.00
C	1.10	1.50
D	0.60	1.00
E	2.44	2.64
F	10.00	10.40
G	13.10	13.70
H	4.40	4.80
M	1.17	1.37
N	2.30	2.70
K	8.80	9.20
L	0.28	0.48
θ	13°	23°

(4) TO-263(D2PAK) Package Dimensions(Unit:mm):

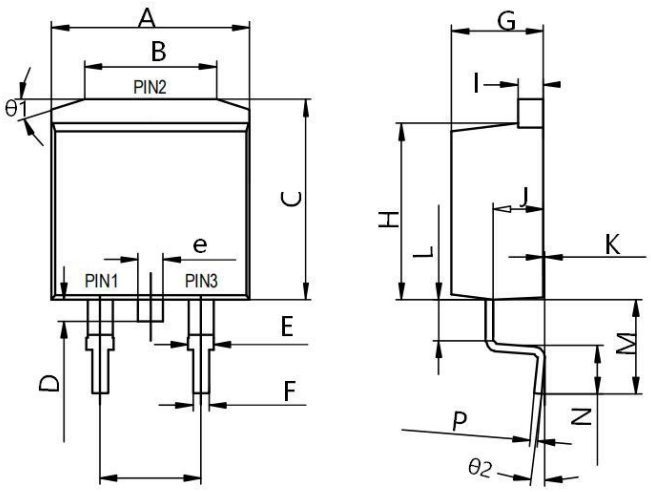

Symbol	Millimeters	
	Min	Max
A	9.80	10.20
B	6.40	7.00
C	10.00	10.40
D	0.90	1.30
E	1.10	1.50
e	1.10	1.50
F	0.60	1.00
G	4.40	4.80
H	8.80	9.20
I	1.17	1.37
J	2.30	2.70
K	0	0.25
L	1.90	2.30
M	4.50	5.10
N	2.30	2.70
P	0.28	0.48
θ1	13°	23°
θ2	0	5°

Disclaimer

1. All information contained in this document is for reference only. Shandong Baocheng Electronics Co.,Ltd reserves the right to revise this document, product specifications and related data at any time without prior notice. Customers shall obtain and confirm the latest product documents and specifications before purchasing or using the products.

2. Under no circumstances shall the Company be liable for any failure or damage caused by the operation of semiconductor devices beyond the maximum rated values.

3. Shandong Baocheng Electronics Co.,Ltd does not warrant the suitability of its products for any specific application and assumes no responsibility for customer's complete machine design or application debugging. Without written approval, products are prohibited from being used as key components of life support equipment. The Company shall not be liable for any consequences arising from unauthorized use.

4. No intellectual property license of Shandong Baocheng Electronics Co.,Ltd is granted, explicitly or implicitly, through this document.