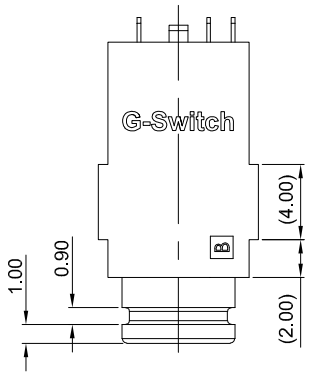

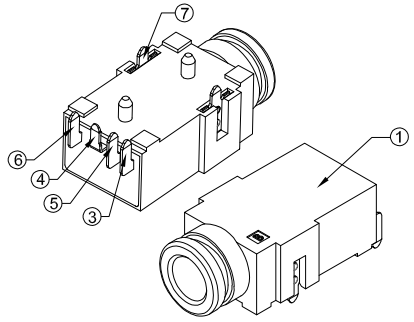

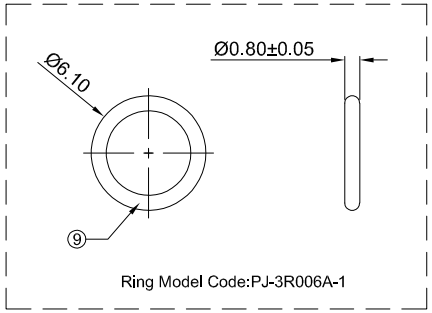

RING

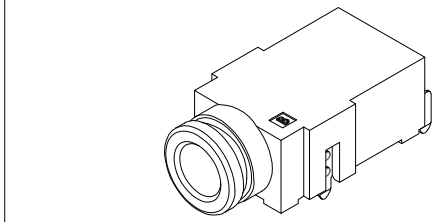

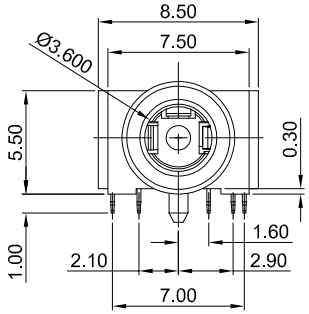

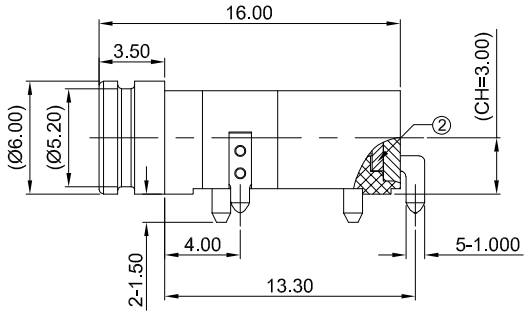

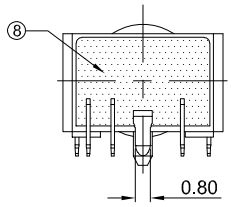

PJ-3 R 006 A-3 N S D 01

- **Type**: PJ=Phone Jack
- **Specification**: 3=Ø3.5mm
- **Angle**: R=90°
- **Serial code**
- **Detail**
- **Number Of Contacts**: 3=TRS
- **Housing Colour**: N=Black
- **Contact Plated**: S=Sn
- **Termipoint**: D=DIP
- **Other**

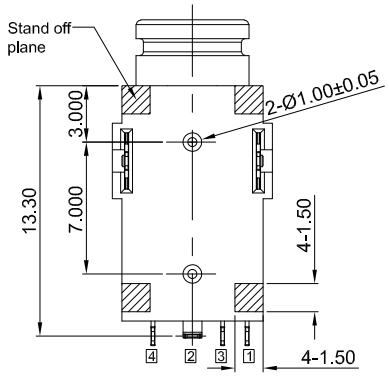

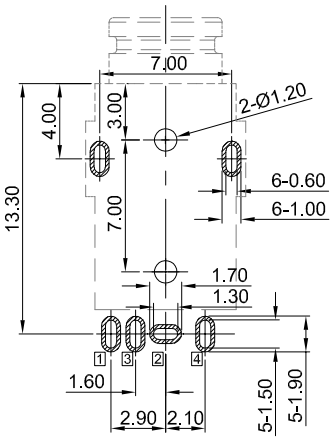

PCB REFERENCE DIAGRAM
TOLERANCE:±0.05

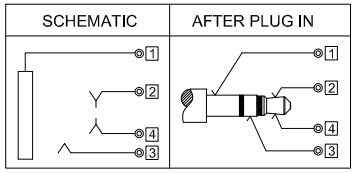

□ : TERMINAL NO.

CIRCUIT DIAGRAM

G-Switch Specification:

1. Rated load: 1A 12V
2. Insulation resistance: 100MΩ min
3. Withstand voltage: 500V AC/min
4. Contact resistance: 30mΩ max
5. Durability cycle: 5,000 Cycles
6. Insertion and extraction force: 3-30N
7. Operating temperature range: -40°C ~ +85°C
8. Waterproof grade: IPX7
9. Hardness of silicone rubber:70°

NO.	DESCRIPTION	QTY	MATERIAL	PLATED & COLOR
9	RING	1	SILICONE	GREEN
8	BOND	1	EPOXY	–
7	TERMINAL	2	C2680	Sn PLATED
6	TIP SPRING-2 [4]	1	C5210	Sn PLATED
5	RING SPRING [3]	1	C5210	Sn PLATED
4	TIP SPRING-1 [2]	1	C5210	Sn PLATED
3	EARTH SPRING [1]	1	C5210	Sn PLATED
2	COVER	1	PA9T+33%GF(GN2330)	BLACK UL 94V-0
1	HOUSING	1	PA9T+33%GF(GN2330)	BLACK UL 94V-0



RoHS Compliant
EU RoHS Standards

SCALE: 1:1	UNIT: mm	Title:	IPX7 Horizontal Ø3.5mm Phone Jack NO 6Pin L=16.00mm DIP
SIZE: A4		Model Code:	PJ-3R006A-3NSD01

Unless otherwise General tolerance:

X.	±0.40
X.x	±0.30
X.xx	±0.20
X.xxx	±0.10
Angles	±3°

DRAWN	CHECKED	APPROVED	DATE
Wu	Xia	Chen	2025.09.05

品赞科技 G-Switch ®
www.dg-switch.com

REV: A0 SHEET: 1/1