产品规格书

Production Specification

客户名称（Customer name）：

产品名称（Production name）： 3535UVA

型　号（Model）： M3535N1UVS8U06-365

编　号（Part number）：

日　期（Date）：

深圳市银月光科技有限公司 Shenzhen Silverlight Technologies Co.Ltd			
编制 Prepared by	审核 Checked by	核准 Approved by	市场部 Market Dept.
杨小安	谢储信		张中良

客户确认 CUSTOMER CONFIRMATION		
确认 Confirmed by	审核 Checked by	核准 Approved by

备注：请检测后签回贵司的宝贵意见，谢谢支持！

Note: please sign back your valuable comments after testing, thank you for your support!

目 录
Catalog

1. 特性（Features ）
2. 应用范围（Applications ）
3. 成品外观尺寸（Package Dimensions）
4. 最大额定值（Maximum rating）
5. 光电特性参数（Electro-optical characteristics）
6. 典型光电参数曲线（Typical optical characteristics curves）
7. BIN 级参数（Bin sorting parameters）
8. 编带规格（Tape Specification）
9. 包装方式（Packaging）
10. 标签描述（Label description）
11. 可靠度实验项目及条件（Reliability Test Items And Conditions）
12. 使用注意事项（Use of caveats）

1.特性 （Features ）

- 封装尺寸 3.45*3.45*2.39/2.85mm
  Encapsulation Size
- 焊接方式：回流焊
  Welding Method: Reflow soldering
- 采用高可靠性封装能量稳定
  High reliability packaging energy stabilization
- 采用陶瓷基板封装
  Ceramic substrate encapsulation
- 符合 RoHS 标准
  Compliance with RoHS standards
- 体积小、功耗低、指向性好
  Small size, low power consumption, good directivity

2.应用范围 （Applications ）

- 油墨、UV 胶水、油漆等需要快速、高效固化的领域
  Ink, UV glue, paint and other areas need fast and efficient curing
- 刑侦检测、玉石检测、文物鉴定、琥珀检测、筹码防伪、荧光粉检测、细微裂缝检测、护照身份证件鉴伪等
  Criminal detection, jade detection, cultural relic identification, amber detection, chip anti-counterfeiting, phosphor detection, micro crack detection, passport identification, etc

3．成品外观尺寸 （Package Dimensions)

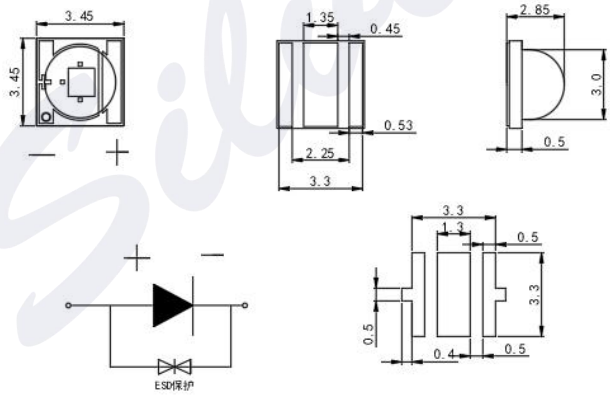

备注：1.所有尺寸单位均以 mm 单位.
Remarks: All units of size in mm units.
2.在没有明确标注的情况下正负公差为 0.1mm
A positive and negative tolerance of 0.1 mm without a clear indication.

4 .最大额定值（Maximum rating）（Ta=25℃）

项目 Project	缩写 Symbol	额定值 Rating	单位 Unit
峰值正向电流 Peak forward current	IFP	1000	mA
光功率 Optical power	IV	2500	mW
反向电压 Reverse voltage	VR	5	V
漏电流 Leakage current	IR	10	μA
工作温度 working temperature	Topr	-40～85	℃
存储温度 Storage temperature	Tstg	5～30	℃
焊接温度 welding temperature	Tsld	回流焊 240℃不超过 30s Reflow soldering 240 ℃ not more than 30s 手动焊接 300℃不超过 3s Manual welding at 300 ℃ for no more than 3S	℃
ESD 等级（HBM）	ESD	4000	V

（脉冲宽度≤10ms，占空比≤0.1）（Pulse width ≤ 10ms, duty cycle ≤ 0.1）

5.主要光电参数（Electro-optical characteristics）（Ta=25℃）

项目 Project	符号 Symbol	测试条件（mA） Test conditions	最小值 Min	典型值 Typ	最大值 Max	单位 Unit
正向电压 Forward voltage	VF	IF=700mA	3.2	-	4.0	V
正向电流 Forward current	IF	-	-	700	-	mA
光功率 Optical power	IV	-	-	1800	-	mW
发光角度 Viewing Angle	2θ½	IF=700mA	-	60	-	°
波长 Peak wavelength	λp	IF=700mA	365	366	370	nm
热阻 Thermal resistance	R	IF=700mA		4.5		℃/W

6. 曲型光电参数曲线 （Typical optical characteristics curves）

Relationship between voltage and current

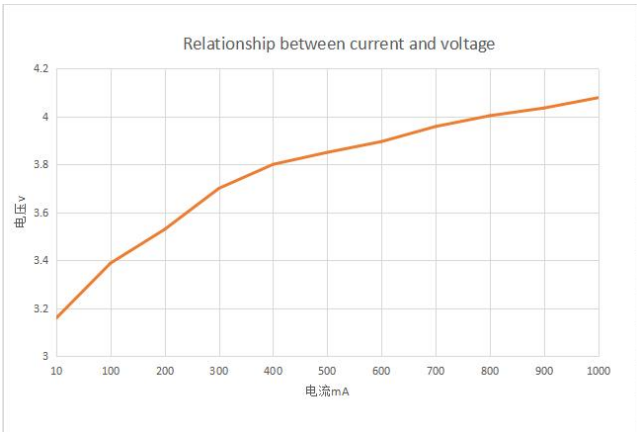

Relationship between current and optical power

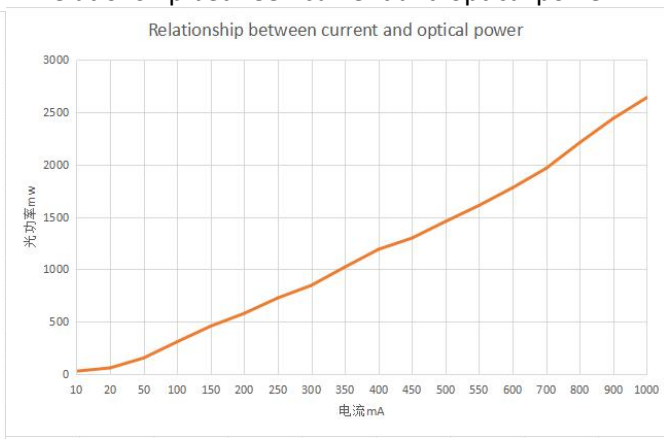

The relationship between current and power

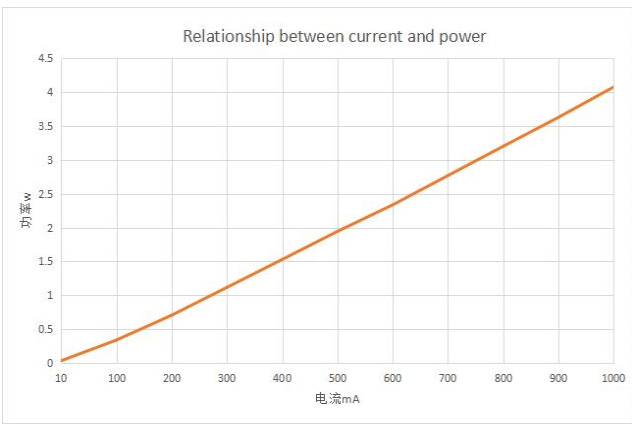

Relationship between current and peak wavelength

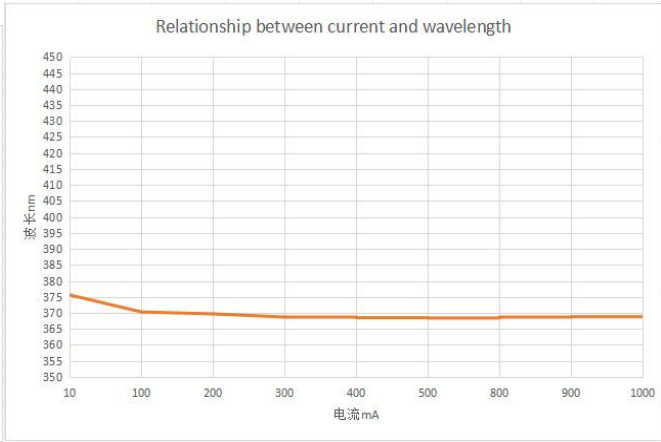

Luminous angle

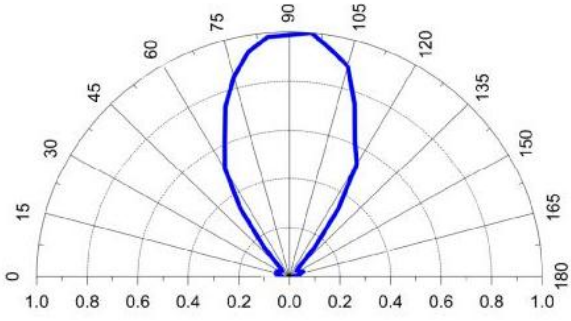

Spectral wavelength

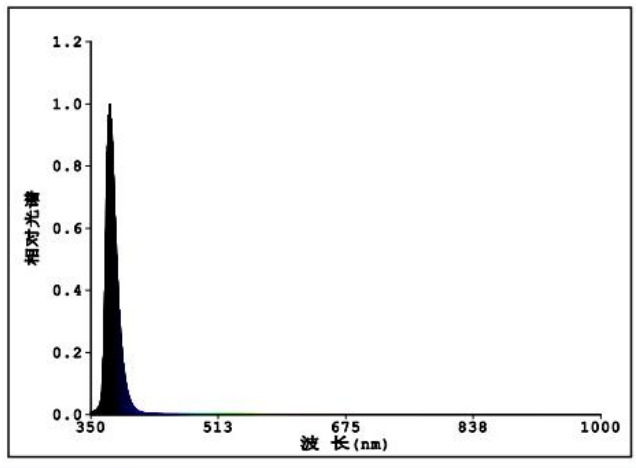

7 . BIN 级参数（Bin sorting parameters)

(1) 正向电压 Forward voltage VF(公差 tolerance：±0.05V@IF=350mA)

最小值 min(V)	最大值 max(V)
3.4	3.6
3.6	3.8
3.8	4.0

8.编带规格（Tape Specification）：1000PCS/卷(1000 pcs / Reel)

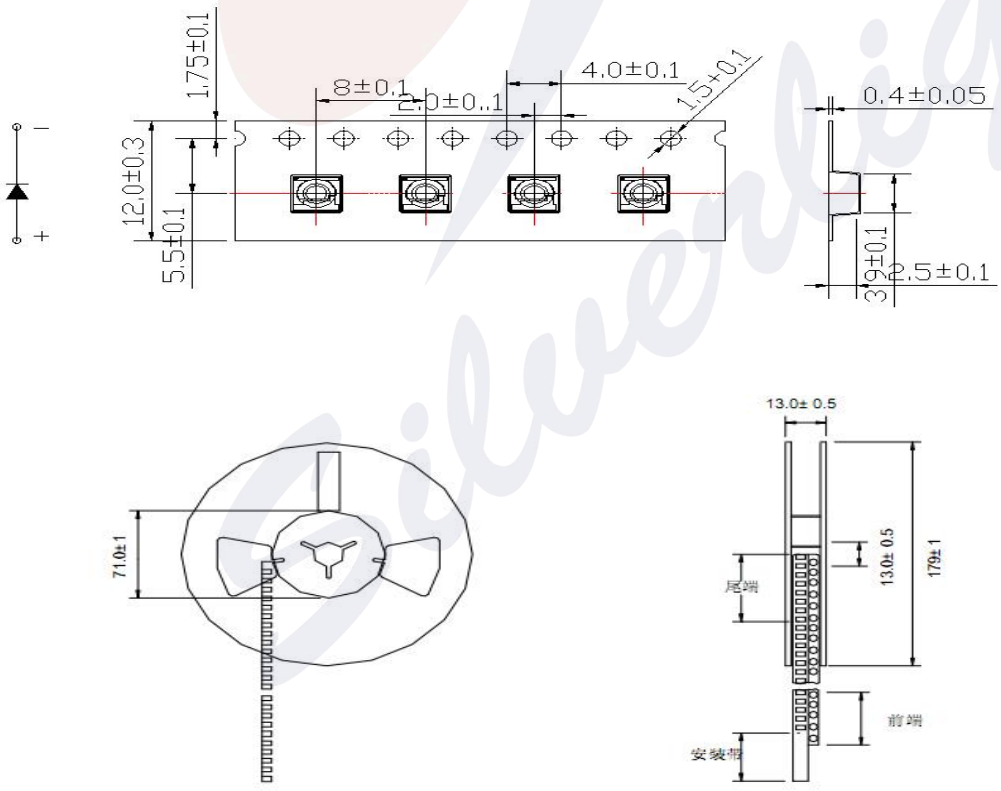

9.包装方式（Packaging）

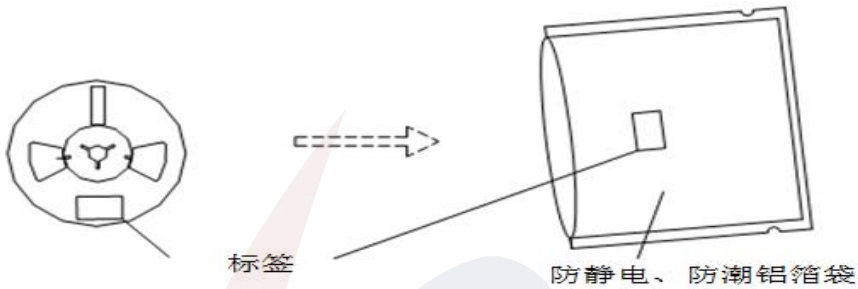

10.标签描述（Label description）

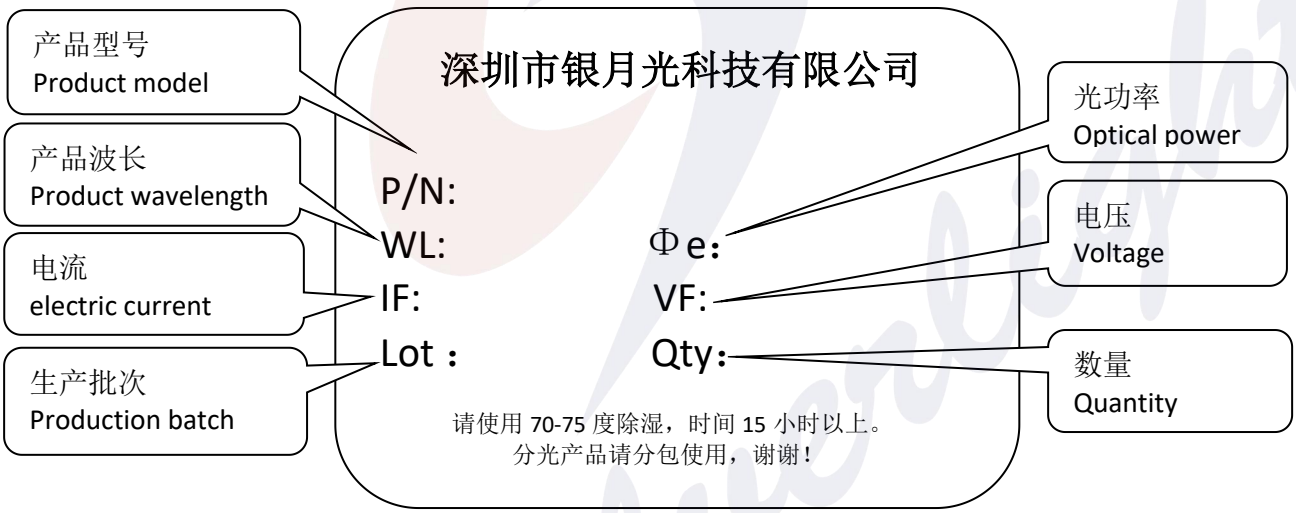

Please use 70-75 degree dehumidification for more than 15 hours.
Please sub contract the light splitting products, thank you!

11．可靠度实验项目及条件（Reliability Test Items And Conditions）

检测项目 Test items	测试条件 Test conditions	测试电流 Test current	测试时间 Test time	测试数量 Sample size	通过率 Pass rate
冷热冲击 Thermal Shock	Ta*：-40℃～85℃，1min （10sec）1min	N/A	50 cycles	25	100%
温度循环 Temperature cycle	Ta：-40℃～25℃～85℃～25℃ 30min 5min 30min 5min	N/A	20 cycles	25	100%
抗潮 Resistance to moisture	Ta：25℃～85℃～-10℃, RH = 90% 24 hrs/1 cycle	N/A	10 cycles	25	100%
高温储存 High temperature storage	Ta = 120 ℃	N/A	1000 hrs	25	100%
高温高湿储存 High temperature and humidity storage	Ta = 85℃，RH = 90%	N/A	200 hrs	25	100%
低温储存 Low temperature storage	Ta = -40 ℃	N/A	1000 hrs	25	100%
振动实验 Vibration experiment	100－2000－100Hz Sweep 4min 200m/s2,3向，4周期	N/A	48 min	25	100%
可焊性实验 Weldability test	245 ℃， 5sec （先在蒸汽中老化16小时）	N/A		25	100%
回流焊 Reflow	260 ℃， 10sec	N/A		25	100%
抗静电能力 Antistatic capability	R ＝ 1.5 kΩ， C = 100pF，V＝±2kV，3次	N/A		25	100%

可靠度实验不合格判定标准:
Criteria for unqualified reliability test

IV：衰减超过（Attenuation over） 30%
Vf：变化超过（Change more than） 20%

备注：1、同一项实验结果的测试需在 2 个小时之内完成;
Remarks：The test of the same experimental result should be completed within 2 hours

2、测试必须在每项实验完成后、材料恢复正常环境条件下才能进行。
The test can only be carried out after each experiment is completed and the material returns to normal environmental conditions.

12.使用注意事项（Use of caveats）

（1）储存 Storage：

● 为避免受潮的影响，我们建议产品在未开包装前储存条件为 5-30°C，相对湿度小于 60%；

In order to avoid the influence of moisture, we suggest that the storage condition of the product before unpacking is 5-30 ° C, and the relative humidity is less than 60%;

● 已开包装的 LED 光源请在 24H 内使用安装完毕，如未用完之产品，请进行除湿并抽真空后密封保存。开封超过一周或湿度卡发生变化时，请务必进行除湿，除湿条件：70°C±5°C，15H；

Please use and install the unpacked LED light source within 24h. If the product is not used up, please dehumidify and vacuum it and then seal it. Dehumidification must be carried out when the dehumidification exceeds one week or the humidity card changes. The dehumidification condition: 70 ° C ± 5 ° C, 15h

● 产品密封保存有效使用期为一年。

The product is sealed and kept for one year

（2）组装注意事项 Assembly precautions：

● 焊接条件：此产品必须使用回流焊接的作业方式,回流曲线最高温度不可超过 260°C.作业或存放过程中不可有 1000g 以上的外力或尖锐物体作用于灯珠表面（如压力，摩擦等外力以及钳子镊子等工具），以免造成元件损伤；

Welding conditions: reflow soldering must be used for this product, and the maximum temperature of reflow curve shall not exceed 260 ° C. during operation or storage, no more than 1000g of external force or sharp objects shall act on the surface of the lamp bead (such as pressure, friction and other external forces as well as forceps, tweezers and other tools) to avoid component damage;

● 如果超出此使用条件，我们将不能保证产品的稳定性，如需使用超出的操作条件，请务必进行风险评估。

If the use conditions are exceeded, we will not be able to guarantee the stability of the product. If you need to use the excess operating conditions, please make a risk assessment.

（3）防静电措施 Anti static measures：

● 请采取足够的措施来防止静电产生，比如带静电环或防静电手指套等；每个制造工程关于产品（工厂、设备、机器、载波机和运输单位）应当连接地面，避免产品电气带电。

Please take adequate measures to prevent the generation of static electricity, such as wearing electrostatic ring or anti-static finger cover; each manufacturing project should be connected to the ground to avoid electrical electrification of the product.

（4）温度控制 Temperature control：

● 为确保在组装时降低接触热阻，请注意在组装过程中，散热片采用良好品质的导热膏涂布均匀且分布面积合理，不可出现太少或高低不平等现象。

In order to reduce the contact thermal resistance during assembly, please note that the heat transfer paste of good quality is applied evenly and the distribution area is reasonable during the assembly process, and there is no too little or unequal height.

●散热介质需保证电介质耐压测试至少通过 500V。

The heat dissipation medium shall be able to pass the dielectric withstand voltage test at least 500V.

（5）驱动控制 Drive control：

● 本产品需使用恒流源进行驱动，且输出电流符合规格书上的功率使用范围，如需使用恒压源或其他使用条件，请进行使用效果风险评估。

Drive control this product needs to use constant current source for driving, and the output current meets the power use range specified in the specification. If constant voltage source or other conditions are needed, please conduct risk assessment on the use effect.

（6）其他 Other：

● 本产品不可在以下条件下使用，如果产品在以下条件下使用，请评估其使用风险和效果：

This product can not be used under the following conditions. If the product is used under the following conditions, please evaluate its use risk and effect:

---直接或间接的打湿或受潮，比如淋雨等；

Direct or indirect wetting or dampness, such as rain, etc;

---被海水损害或侵蚀；

Damaged or eroded by sea water;

---被暴露于腐蚀性气体(如 Cl2,H2S、NH3、SOx、NOx 等) ；

Exposed to corrosive gases (such as Cl2, H2S, NH3, Sox, NOx, etc.);

---被暴露于粉尘、液体或油；

Exposed to dust, liquid or oil;

● 所有高功率的发光 LED 产品安装在铝金属为核心印刷电路板，可直接点亮，但我们不建议在没有一个适当的散热设备时,照明高功率 LED 点亮超过 5 秒；

All high-power light-emitting LED products are installed on the aluminum core printed circuit board, which can be directly lit. However, we do not recommend lighting high-power LED for more than 5 seconds without a proper heat dissipation device;

●该产品为发射出短波长的 LED。在使用过程中，LED 发射出高强度的紫外光，可损伤皮肤和眼睛。

The product is LED emitting short wavelength. In the process of use, LED emits high-intensity ultraviolet light, which can damage the skin and eyes.

紫外光会伤害皮肤，甚至有致癌的风险，操作中应避免被紫外光照射到。

UV light can damage the skin and even cause cancer. Avoid being exposed to UV light during operation.

注意避免不带紫外防护眼镜的情况下直视紫外光。LED 点亮时不允许直视其透镜。

Be careful not to look at the UV directly without UV protective glasses. It is not allowed to look directly at the lens when the LED is on.

● 回流焊不能超过两次,回流焊最高温度建议 260℃以下，当温度超过 260℃极大可能引起 LED 产品失效;

Reflow should not be more than two times. The maximum reflow temperature is recommended below 260 ℃. When the temperature exceeds 260 ℃, LED products may fail;

● 为了获得更好的稳定输出，UV-LED 需要良好的散热环境或者散热系统，建议灯珠在工作状态中，支架温度不要超过 50℃.

In order to obtain better stable output, UV-LED needs good cooling environment or cooling system. It is recommended that the temperature of the bracket should not exceed 50 ℃ when the lamp bead is in working state.

- 无铅回流焊曲线如下(最高温度设定 260℃):

The lead-free reflow soldering curve is as follows (the maximum temperature is set at 260 ℃):

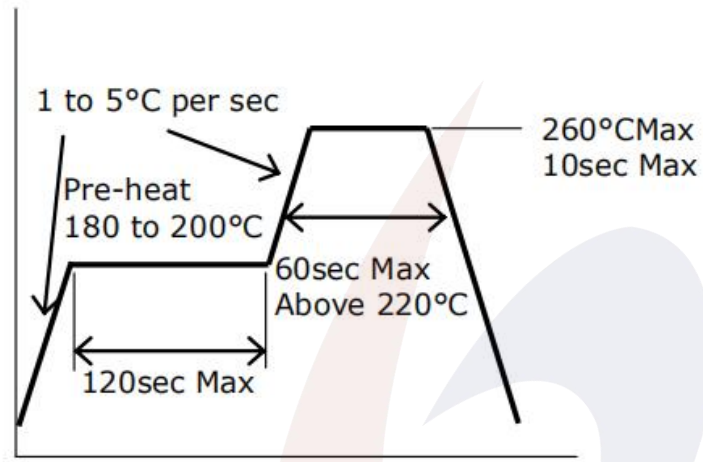

- 在使用紫外 LED 的产品/系统上贴如下的警示标签。

Attach the following warning labels on products / systems using UV LED.





2020.03 发布(release)

规格信息 (包括设计，尺寸，典型数据) 若有改动不作预先通知。

Specification information (including design, size, typical data) will not be changed without prior notice.