东莞市诚润电子科技有限公司
Chevron Electronic Technology Co Ltd
广东省东莞市厚街镇宝宏路鼎昊高新科技产业园 D 栋二楼
2nd Floor of Building D, Baohong Road Dinghao High-New Technology Industrial Park, Houjie Dongguan, Guangdong
Tel: +86 769-85888841 E-mail:ccre@chevronfuse.com
Web:www.chevronfuse.com

承 认 书

Specification For Approval

产品信息 Product information

产 品 名 称Product name： 8.4*5.2*4.1 塑封慢断保险丝/8.4*5.2*4.1 Plastic Time late fuse

产 品 规 格Product model： SST xxA250V 编带

拟 制 Prepared By	确 认 Reviewed By	批 准 Approved By
雷淑贤	邓 波	方 剑

客户承认 Customer Approval

客户名称 Customer name:

客户料号 Customer P/N:

经 办 Prepared By	审 核 Reviewed By	批 准 Approved By
确认结果 Verify the results：		
☐合格 Qualified	☐不合格 Unqualified	不合格原因 Root cause:

生效日期 Effective Date: 年 YY 月 MM 日 DD

1.如果本承认书获得贵司认可，请您签名后拷贝一份回传给我们。
If this acknowledgement letter is approved by your company, please sign it and send us a copy
2.当您下订单给诚润电子时，烦请在订单中列出上面产品信息表格中的产品名称和产品规格。
When you place an order with Chengrun Electronics, please kindly list the product names and specifications in the product information table above in the order form

变更履历

内　容	日　期	确 认
修改封面；增加履历页；修改内容；增加信赖性测试；完善产品特性项，	2025. 5. 15	方 剑
变更丝印字符：去掉 CQC 符号；变更 UL-CUL 为 UR-CUL	2025.6.16	刘征东
添加实物图片	2026.3.18	方 剑
9.C 增加存储条件；9.D.1 修改波峰焊条件	2026.7.1	方 剑
添加 6.C 引脚测试要求	2026.7.28	方 剑
明确电阻范围±20%	2026.8.20	方 剑

编　制	确　认	批　准
李尚品	邓　波	方　剑

适用范围 / Scope of Application

本产品适用于各类电子设备电路的过流保护作用，应用于照明设备、电源设备以及适配器等领域。

This product is suitable for overcurrent protection in various electronic device circuits and is applied in fields such as lighting equipment, power supply equipment, and adapters

适用测试标准/ Standards

遵循 IEC60127-3;GB/T9364-3; UL248-14

In accordance with IEC60127-3;GB/T9364-3; UL248-14

3.单体和编带结构及尺寸 / Structure and dimensions of individual units and tape carriers

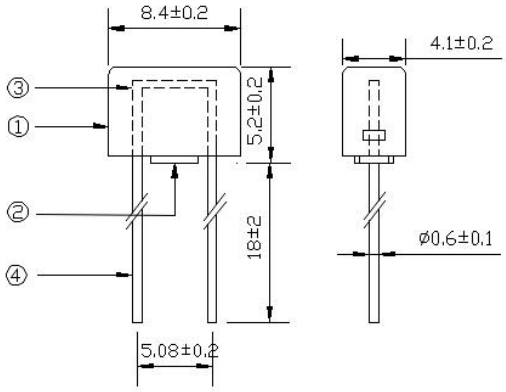

1	外壳 Shell	尼龙 Nylon
2	内芯 Core	尼龙 nylon
3	熔体 Element	合金 Alloy
4	引线 Lead wire	铜镀锡 Sn plated Cu



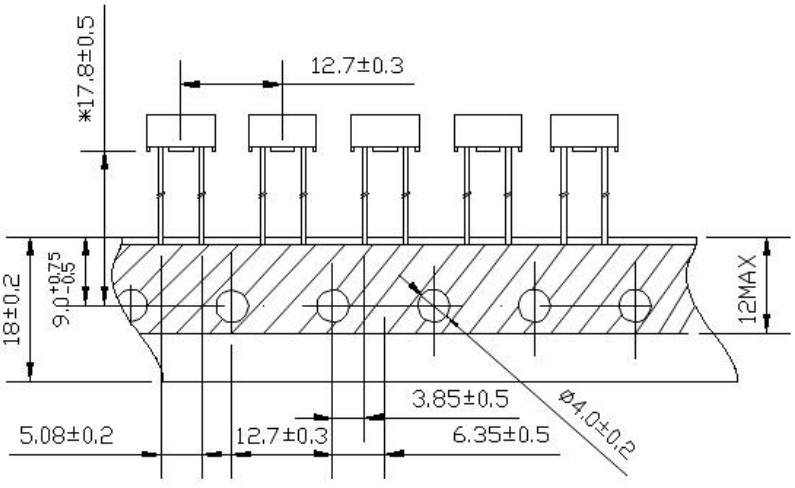

4.认证清单/ Certification List

安规标准 Agency	认证电压 Certified voltage	认证电流 Ampere Range	证书编号 Agency File Number
UR-CUR	250Vac	100mA/125mA/160mA/200mA/250mA/315mA/400mA/500mA/630mA/750mA/800mA/1A/1.25A/1.6A/2A/2.5A/3.15A/4A/5A/6.3A/8A/10A/12A/12.5A/15A/16A	E358589
CCC		1A/1.6A/2A/2.5A/3.15A/4A/5A/6.3A	2026180207090477
CQC		1A/1.6A/2A/2.5A/3.15A/4A/5A/6.3A	CQC2019010207260848
VDE		1A/1.6A/2A/2.5A/3.15A/4A/5A/6.3A	40052042
PSE		1A/1.6A/2A/2.5A/3.15A/4A/5A	PSE20021776
		6.3A	PSE20021775
KC		1A/1.6A/2A/2.5A/3.15A/4A/5A/6.3A-250V	Su05044-20001 Su05044-20002

5.产品标示 / Product Markin

保险丝外壳顶部需有下列标示：The top of the fuse cap shall have the following markings

以 2A 举例：Example 2A

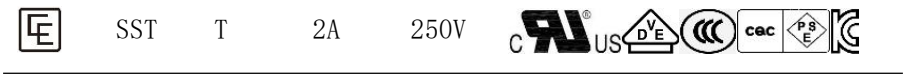

1	工厂徽标：Chevron Logo	
2	产品名称：Product Name	SST
3	特性符号：Characteristic symbol	T
4	额定电流：Rated Current	2A
5	额定电压：Rated Voltage	250V
6	安规符号：Approval Marks	See the Product Characteristic

注意：A.对于标示的大小和位置没有规定 Size and position of the markings shall not be provided;

B. 其它电流对应安规符号请参考产品特性中 Marking 栏 For other current values, please refer to the "Marking" column in the product characteristics for the corresponding safety marking symbols

6.产品外观和形状要求/ Appearance and shape requirements

A. 外观不应出现显著的污点、裂纹，标识应该容易辨识

There shall not be any remarkable stain and crack on the appearances, markings shall be easily legible

B. 插脚式塑胶方形保险丝 Plug-in type plastic square fuse

C. 引脚测试要求如下 The pin testing requirements are as follows:

保险丝引脚应固定牢固，作如下测试时，保险丝引脚不应有松动或损坏：The fuse-links lead should be firmly attached, At the conclusion of testing, thefuse-links lead shall remain firmly attached:

C.1 拉力测试：固定保险丝本体，对引脚施加 10N 的轴向拉力 1min。Tensile: the force applied shall be 10N

C.2 推力测试：固定保险丝本体，对引脚施加 2N 的轴向推力 1min。Thrust: the force applied shall be 2N

C.3 弯折测试：距离保险丝内芯约 2mm 的地方将引脚弯折 90° 一次，并且施加 5N 的拉力。

Bending: the force applied shall be 5N and the number of bends shall be one。

7.产品特性/Products Characteristic

Part No	Rated Current	Rated Voltage	Typic Cold DCR(mΩ ±20%)	Breaking Capacity	I^2T A^2s	Safety Approvals
SST01000250	100mA	250V	3400	UL 120A@250Vac VDE 35A OR 10In@ 250Vac CCC/CQC 35A OR 10In@ 250Vac KC 35A OR 10In@ 250Vac	0.035	cULus
SST01250250	125mA	250V	-		0.075	cULus
SST01600250	160mA	250V	1430		0.1	cULus
SST02000250	200mA	250V	893		0.214	cULus
SST02500250	250mA	250V	-		0.3	cULus
SST03150250	315mA	250V	701		0.49	cULus
SST04000250	400mA	250V	-		0.5	cULus
SST05000250	500mA	250V	235		0.9	cULus
SST06300250	630mA	250V	183		1.2	cULus

SST07500250	750mA	250V	-	PSE 35A OR 10In@ 250Vac	2.2	
SST08000250	800mA	250V	-		3.9	
SST11000250	1.0A	250V	104		7.44	
SST11250250	1.25A	250V	63		9.63	
SST11600250	1.6A	250V	47		19.2	
SST12000250	2.0A	250V	38		31.36	
SST12500250	2.5A	250V	28		44.79	
SST13150250	3.15A	250V	21		105	
SST14000250	4.0A	250V	15		127	
SST15000250	5.0A	250V	11		268.8	
SST16300250	6.3A	250V	7.3		281.6	
SST18000250	8.0A	250V	6.7		360	
SST21000250	10.0A	250V	4.7		634.8	
SST21250250	12.5A	250V	3.7		650	
SST21500250	15.0A	250V	3.2		1287	
SST21600250	16A	250V	2.9		1552	

8.特性测试/ characteristic test

测试条件/Test Condition

A. 所有的测试环境温度保持在 25±10°的范围内

All the test environments are maintained within the temperature range of 25 ± 10 °C

B. IT 特性测试参考下表/IT Characteristic test follow up the form

额定电流 Rated current	熔断时间 Opening Time				
	150%	210%	275%	400%	1000%

100mA-10A	>1H	<2min	400ms-10s	150ms-3s	20ms-150ms
12.5A-16A	>1H	<5min	400ms-10s	150ms-3s	20ms-150ms

C．时间电流曲线参考图/IT time current curve

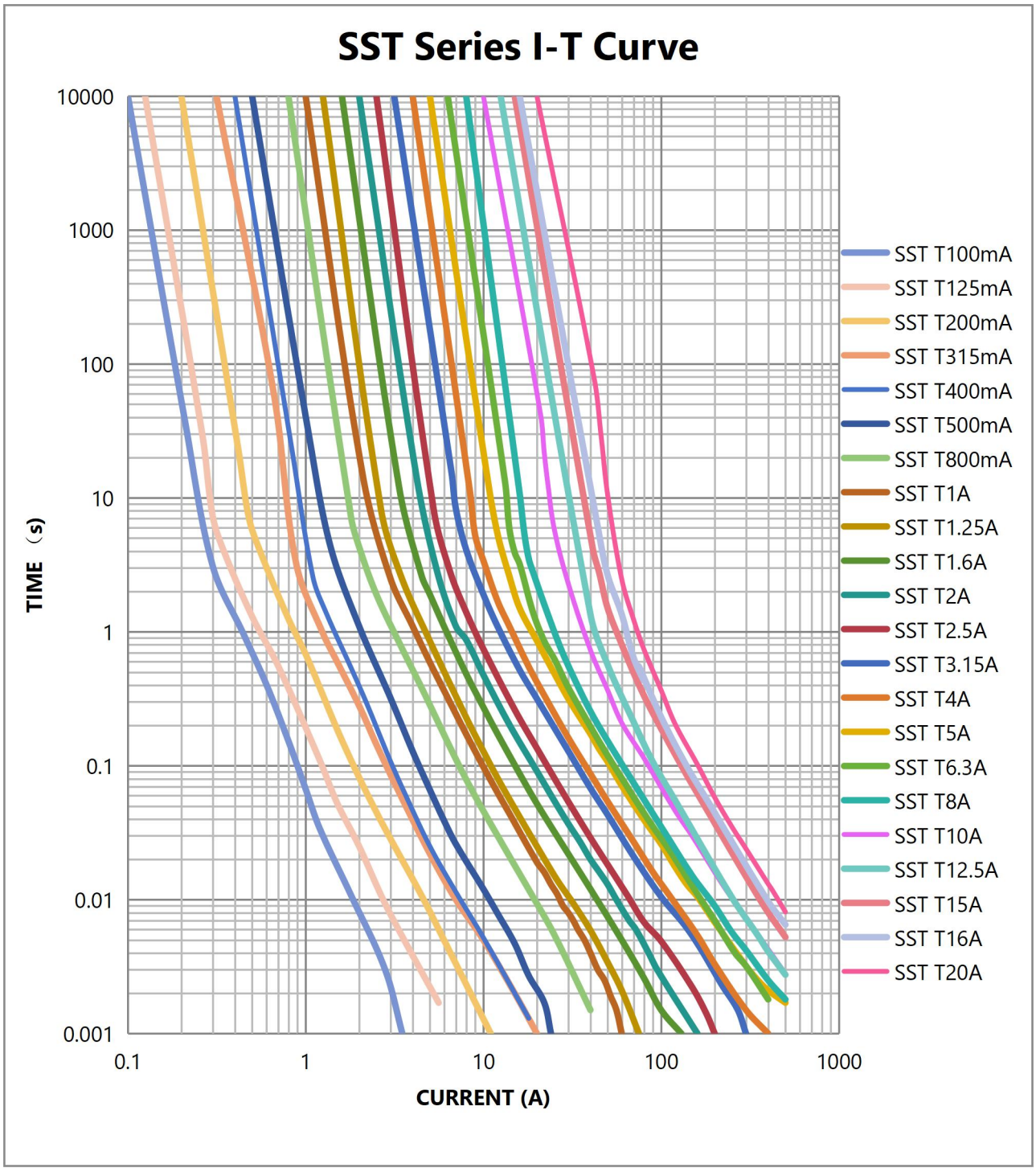

9.环境特性/ Environmental Characteristic

A．正常操作温度范围-55℃～+125℃

Operating temperature -55℃～+125℃ normal

B．若工程师在设计保险丝安装的环境温度超出 25℃时，需要考虑环境温度对保险丝的寿命影响，请参考下面：

温度-电流曲线图

If the engineer finds that the ambient temperature where the fuse is installed exceeds 25℃, he/she needs to consider the influence of ambient temperature on the lifespan of the fuse. Please refer to the following:

Temperature - Current Curve Chart

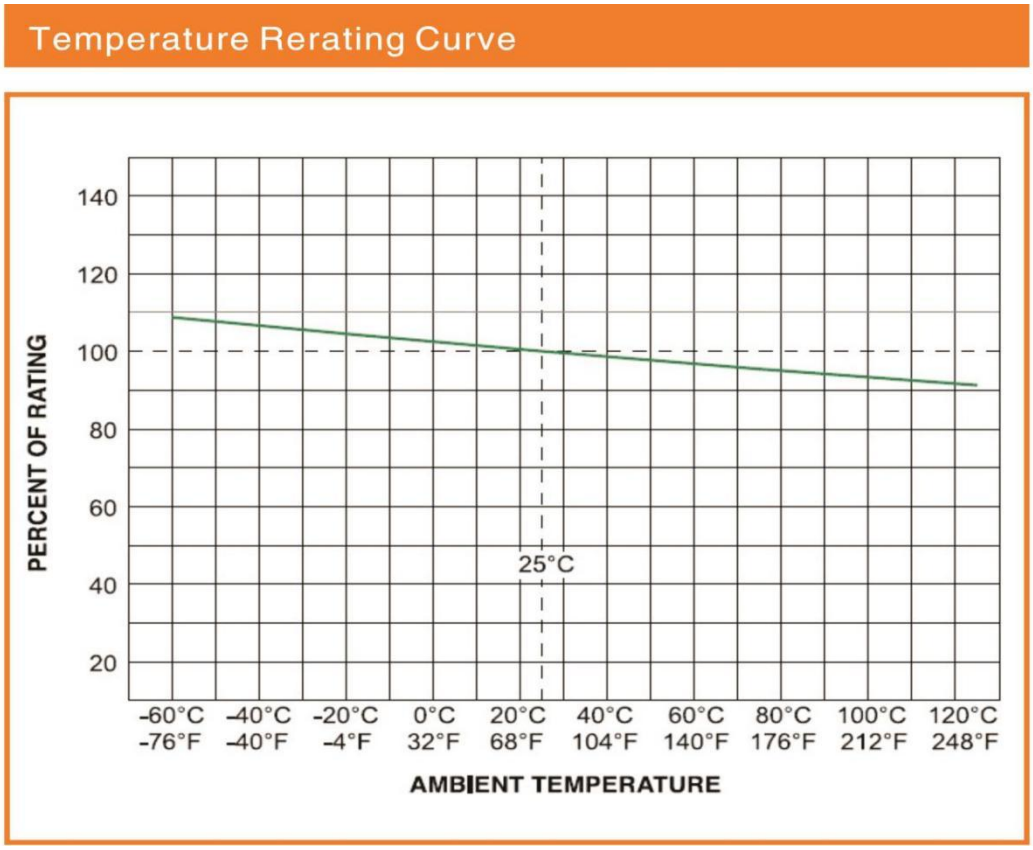

C，存储条件 / Storage Conditions

在温度+5℃~30℃、相对湿度 25%～60%的密闭条件下可存放 2 年。

Under airtight in temperature+5℃~ 30℃、relative humidity 25%～60% can store 2 years.

在温度+10℃~60℃、相对湿度为 95%的非露天下最多可存放 30 天。

Without dew in temperature+10℃~ 60℃、relative humidity be 95% maximum value for 30days.

D,建议客户焊接参数

1. 波峰焊参数 / Wave Parameters:

锡炉温度及焊接时间 / Solder Pot Temperature: 265℃ ±5℃; Solder Dwell Time: 5~6s

2. 手工焊参数 / Hand-Solder Parameters:

烙铁温度及焊接时间 / Solder Iron Temperature: 370±10℃; Heating Time: 3s Max

E. 信赖性测试/Reliability test

编号 No	项目 Item	内容 content
1	绝缘阻抗测试 Insulation Resistance test	100000Ω Minimal
2	可焊性测试 Solderability test	240±5℃; T=3±0.5s; Cover≧95%
3	耐焊接热测试 Soldering heat resistance test	260℃ 10s; IΔRI<10%
4	热冲击测试 Thermal shock	100 cycles between -65℃~+125℃ 60minite; each extreme IΔRI<10%
5	高低温储存 High-low temperature storage	+125℃/-55℃ each 96 hrs; IΔRI<10%
6	高温操作 High temperature operating life	70±2℃; 0.6In;96hrs; IΔRI<10%
7	盐雾测试 Salt spray test	5% salt solution; 48hrs; IΔRI<10%
8	耐温性测试 Humidity test	T=40±2℃,90%-95%RH;1000hrs, IΔRI<10%

F. 安装建议 Installation Recommendations

1. 建议按如下示意图安装 It is recommended to install as shown in the following diagram

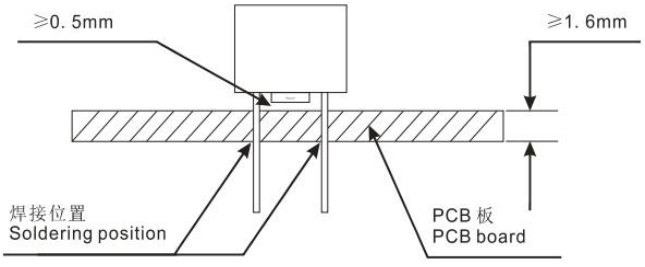

2.还可以选择下列保险丝座安装 You can also choose from the following fuse holder installations.



10.包装 / Packaging

1. 包装袋/盒上标签需明确产品料号，产品电压/电流及安规符号等信息；

The labels on the packaging bags/boxes should clearly indicate the product part number, product voltage/current and safety symbols, etc

2. 包装材料均符合 ROHS/REACH/HF 的环保要求， 且包装材料不会和零件发生化学反应，造成不良；

The packing material conforms to ROHS/REACH/HF environmental protection request. And the packing materials will not have the chemical reaction with the components

3. 包装盒尺寸及包装数量/ Packaging box size and quantity of packages

每一个内盒装 1000PCS；每 1 个外箱装 10 个内盒；

1000pcs in per inner box；10 inner box per carton

4. 散装按客户要求/Bulk according to customer requirements

5. 包装盒尺寸图/ Packaging Box Dimension Diagram

编带产品内盒尺寸↓ Dimensions of the inner box for the tape product	编带产品外箱尺寸↓ Dimensions of the outer box for tape products
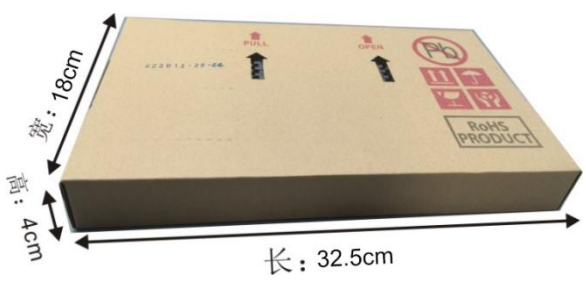	

散装产品内盒尺寸↓ Dimensions of the inner box for bulk products	散装产品外箱尺寸↓ Dimensions of the outer carton for bulk products
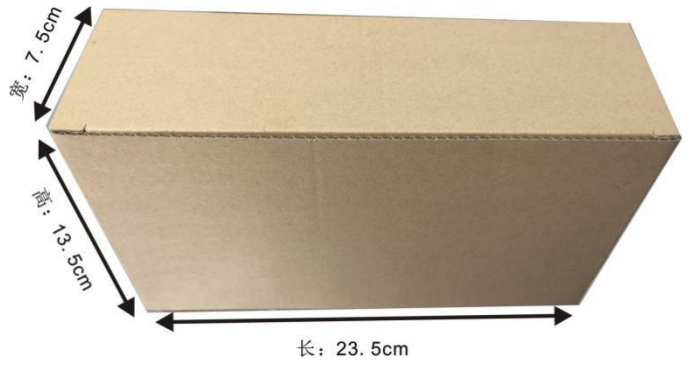	

11.其它/Other

1. 如果在使用中超出本规格书要求，须经双方协商确认；

If the requirements exceed those stipulated in this specification during the usage, it shall be confirmed through consultation between both parties.

2. 如果本规格书有不适当的地方，须经过双方协商由本公司修改；

If there is anything inappropriate in this specification, it shall be revised by our company after mutual consultation between both parties