

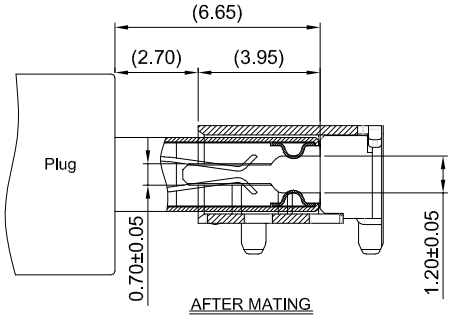

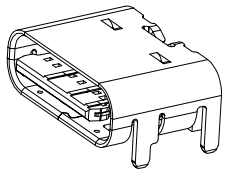

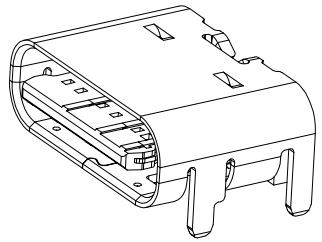

GT-USB-7002M03-XX

Contact Plated
00=G/F
01=1μ"
03=3μ"
05=5μ"
15=15μ"
30=30μ"

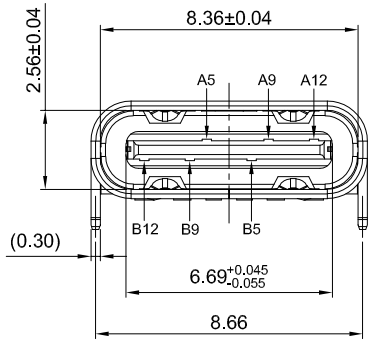

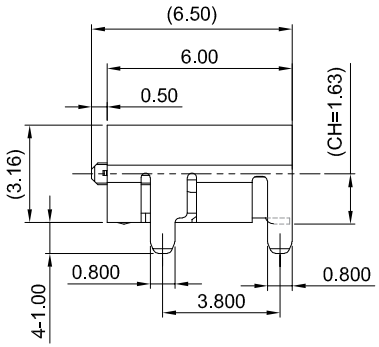

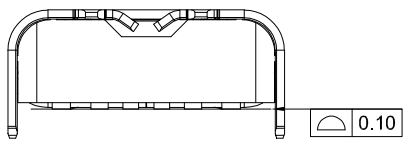

SECTION A-A

G-Switch USB-C Specification:

1.Current rated: 5A on vbus/1.25A
on vconn/0.25A on other
Voltage rating: 20V AC/DC
2.Withstanding voltage: 100V AC/minute
3.Contact resistance: 40mΩ Max
4.Insulation resistance: 100MΩ Min
5.Operating temperature: -40°C ~ +85°C
6.Mating force: 5N~20N
7.Unmating force: 8N~20N,after durability test: 6N~20N
8.Durability cycle:10,000 cycles

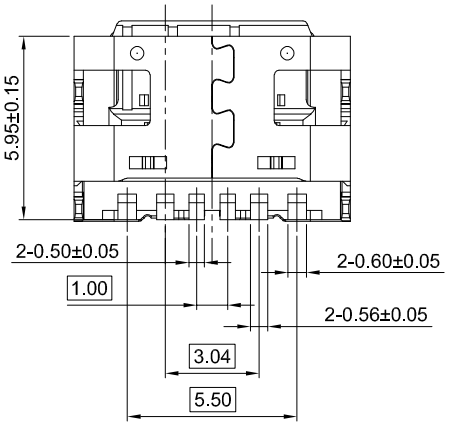

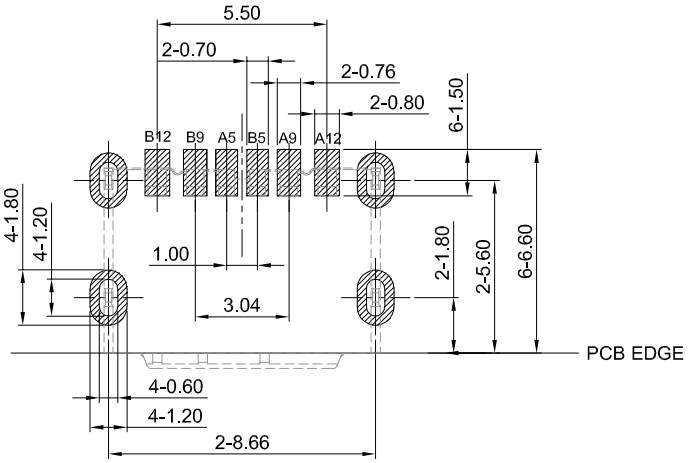

PCB REFERENCE DIAGRAM
TOLERANCE:±0.05

A1	A2	A3	A4	A5	A6	A7	A8	A9	A10	A11	A12
				CC1				VBUS			GND
				Second				First			First

B12	B11	B10	B9	B8	B7	B6	B5	B4	B3	B2	B1
GND			VBUS				CC2				
First			First				Second				

NO.	PARTS	MATERIAL	REMARKS
1	SHELL	SUS201	Ni30μ"MIN PLATED
2	MID PLATE	SUS301	——
3	HOUSING	LCP	BLACK UL 94V-0
4	TERMINALS	C2680	G/F PLATED ON CONTACT AREA G/F PLATED ON WELDING AREA

Pb Process Capable

RoHS Compliant EU RoHS Standards

Compliant Halogen Free

SCALE:	UNIT: mm	Title:	Horizontal Type-C 6P Female SMT CH=1.63 L=6.50mm
SIZE: A4			
Unless otherwise General Tolerance: X. ±0.40 X.x ±0.30 X.xx ±0.20 X.xxx ±0.10 X° ±5°		Model Code:	GT-USB-7002M03-XX
DRAWN	CHECKED	APPROVED	DATE
Xia	Chen	Chen	

品赞科技 b-Switch www.dg-switch.com

REV: A0 SHEET: 1/1