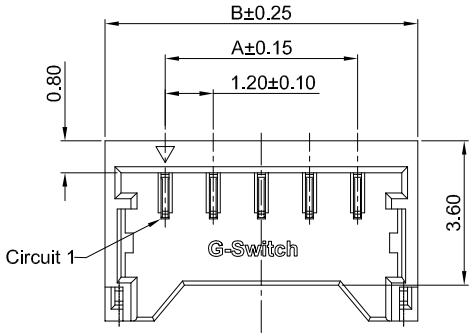

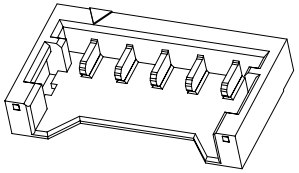

G-Switch Specification:

1.Current rated: 1.5A AC/DC
2.Voltage rating: 50V AC/DC
3.Withstanding voltage: 500V AC
4.Contact resistance: 20mΩ max.
5.Insulation resistance: 100MΩ min
6.Durability cycle: 10Cycles
7.Removal force: 0.05kgf/Pin min
8.Operating temperature range: -25°C ~ +85°C



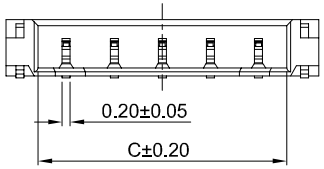

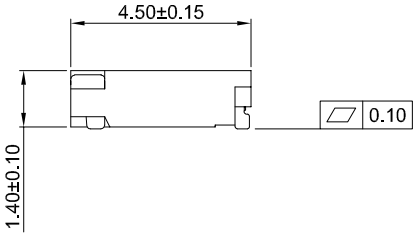

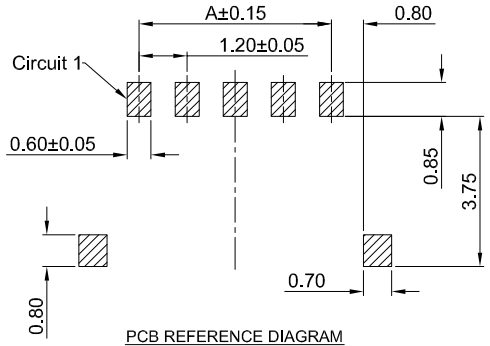

PCB REFERENCE DIAGRAM
TOLERANCE:±0.05

GT-A1201 W R S-1 XX X XX 01

- **G-Switch**
- **Series No**
- **Connector** W-Wafer
- **Angle** R-90°
- **TermIpoInt** S-SMT
- **Pin Q' PY** 02~10
- **Row NO** 1-Single Row
- **HousIng Colour** B-Black
- **Terminal Plating** 11-All G/F

Ordering Information:

Circuit	Dimension(mm) A	B	C	Circuit	Dimension(mm) A	B	C
02	—	4.20	2.65	06	6.00	9.00	7.45
03	2.40	5.40	3.85	07	7.20	10.20	8.65
04	3.60	6.60	5.05	08	8.40	11.40	9.85
05	4.80	7.80	6.25	10	10.80	13.80	12.25

NO.	PART NAME	MATERIAL	REMARK
3	SOLDER TABS	PHOSPHOR BRONZE	MATTE Tin
2	CONTACT	PHOSPHOR BRONZE	ALL G/F
1	HOUSING	LCP,94V-0	BLACK

Pb Process Capable | RoHS Compliant EU RoHS Standards | Compliant Halogen Free

SCALE: 1:1	UNIT: mm	Title:	Wafer 1.20mm Pitch 90° SMT Type Single Row Connector
SIZE: A4			
Unless otherwise General Tolerance: X ±0.40, X.x ±0.30, X.xx ±0.20, X° ±5°, X.x° ±3°		Model Code:	GT-A1201WRS-1XXXXX01

DRAWN	CHECKED	APPROVED	DATE
Hu	Chen	Chen	2022.12.28

品赞科技 b-Switch www.dg-switch.com

REV: A0 SHEET: 1/1