Surface Mount Schottky Barrier Rectifiers

1 General Description

1.1 Features

- Plastic package has Underwriters Laboratory Flammability Classification 94V-0
- Metal silicon junction ,majority carrier conduction
- Built-in strain relief
- For surface mounted applications
- Low profile package
- Low power loss ,high efficiency
- High current capability ,Low forward voltage drop
- High surge capability
- High temperature soldering guaranteed:260 C/10 seconds at terminals Component in accordance to RoHS 2002 95 EC and / / WEEE 2002 96 EC

REVERSE VOLTAGE
20-100V
FORWARD CURRENT
2Ampere

1.2 Typical Applications

- For use in low voltage ,high frequency inverters, free wheeling,and polarity protection applications



1.3 Mechanical Data

- Case: JEDEC SMB(DO-214AA) molded plastic body
- Terminals: solder plated ,solderable per MIL-STD-750,method 2026
- Polarity: color band denotes cathode end

PINNING

PIN	DESCRIPTION
1	Cathode
2	Anode

2 Maximum Ratings(TA=25℃ Unless otherwise specified)

PARAMETER	SYMBOL	SS22B	SS23B	SS24B	SS25B	SS26B	SS28B	SS210B	UNIT
Maximum Repetitive Peak Reverse Voltage	V_{RRM}	20	30	40	50	60	80	100	V
Maximum RMS Voltage	V_{RMS}	14	21	28	35	42	56	70	V
Maximum DC Blocking Voltage	V_{DC}	20	30	40	50	60	80	100	V
Maximum Average Forward Rectified Current	$I_{F(AV)}$	2.0							A
Non-Repetitive Peak forward surge current 8.3 ms single sine-wave superimposed on rated load (JEDEC Method)	I_{FSM}	50.0							A
Operating Temperature Range	T_J	-55 to +125		-55 to +150					℃
Storage Temperature Range	T_{STG}	-55 to +150							℃
Thermal Resistance	$R_{\theta JA}$	75.0							°C/W
	$R_{\theta JL}$	17.0							

Notes:
1.Single phase, half wave, 60Hz resistive or inductive load,for capacitive load, derate by 20%.
2.Pulse test: 300 μs pulse width,1% duty cycle
3.P.C.B. mounted with 0.2" X 0.2" (5.0X5.0 mm) copper pad areas.

3 Electrical Characteristics(TA=25℃ Unless otherwise specified)

PARAMETER		SYMBOL	SS22B	SS23B	SS24B	SS25B	SS26B	SS28B	SS210B	UNIT
Maximum instantaneous Forward Voltage drop per diode at 2.0A		V_F	0.55			0.75		0.85		V
Reverse Current at Rated DC Blocking Voltage	Ta =25℃	I_R	0.2							mA
	Ta=100℃		10.0							

4 Characteristics Curves(TA=25℃ Unless otherwise specified)

FIG.1-FORWARD CURRENT DERATING CURVE

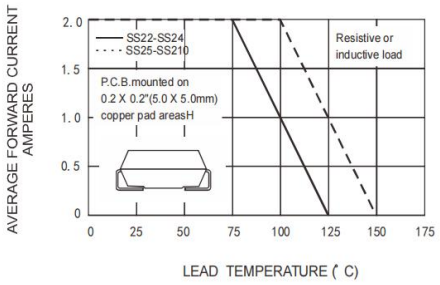

FIG.2-MAXIMUM NON-REPETITIVE PEAK FORWARD SURGE CURRENT

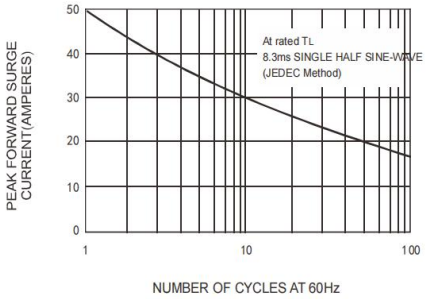

FIG.3-TYPICAL INSTANTANEOUS FORWARD CHARACTERISTICS

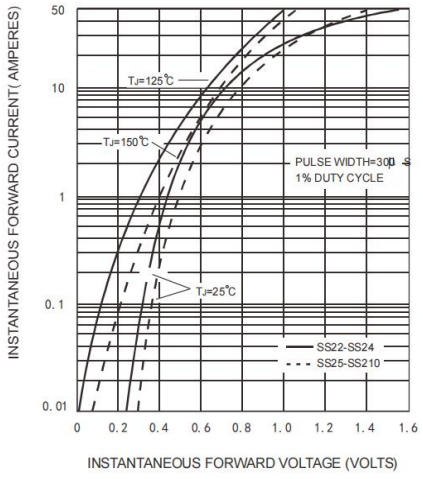

FIG.4-TYPICAL REVERSE CHARACTERISTICS

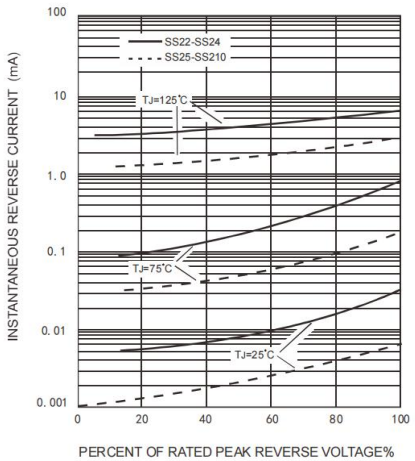

FIG.5-TYPICAL JUNCTION CAPACITANCE

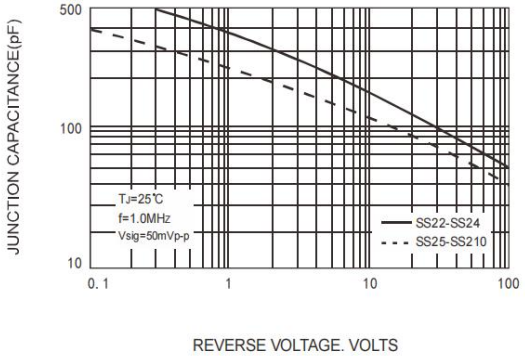

5 Package Outline Dimensions

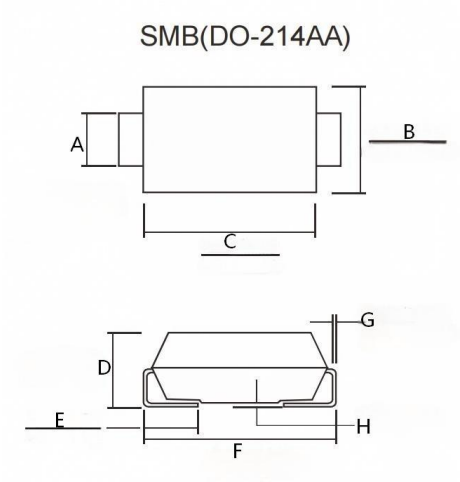

Symbol	Millimeters		Inches	
	Min	Max	Min	Max
A	1.91	2.20	0.075	0.086
B	3.30	3.94	0.130	0.155
C	4.06	4.76	0.160	0.187
D	2.13	2.44	0.083	0.096
E	0.76	1.52	0.030	0.060
F	5.08	5.59	0.200	0.220
G	0.152	0.305	0.006	0.012
H	-	0.203	-	0.008

6 Ordering Information

PACKAGE	UNIT WEIGHT (g)	PACKAGING	REEL (pcs)
SMB	Consult	Reel	3000

Disclaimer

1. All information contained in this document is for reference only. Shandong Baocheng Electronics Co.,Ltd reserves the right to revise this document, product specifications and related data at any time without prior notice. Customers shall obtain and confirm the latest product documents and specifications before purchasing or using the products.

2. Under no circumstances shall the Company be liable for any failure or damage caused by the operation of semiconductor devices beyond the maximum rated values.

3. Shandong Baocheng Electronics Co.,Ltd does not warrant the suitability of its products for any specific application and assumes no responsibility for customer's complete machine design or application debugging. Without written approval, products are prohibited from being used as key components of life support equipment. The Company shall not be liable for any consequences arising from unauthorized use.

4. No intellectual property license of Shandong Baocheng Electronics Co.,Ltd is granted, explicitly or implicitly, through this document.