MSKSEMI 美森科
SEMICONDUCTOR

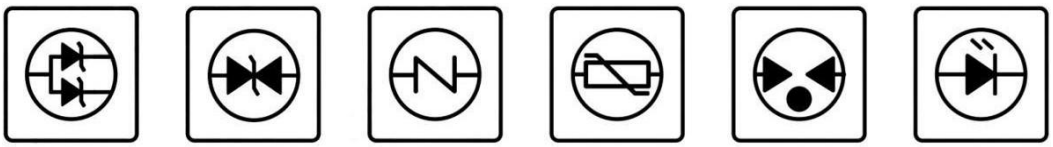

RCLAMP0502B-MS

Product specification

RCLAMP0502B-MS

Features

- 45 Watts peak pulse power (tp = 8/20μs)
- Unidirectional configurations
- Solid-state silicon-avalanche technology
- Low clamping voltage
- Low leakage current
- Low capacitance (Cj=0.7 pF typ.)
- Protection two data lines
- IEC 61000-4-2 ±20kV contact ±15kV air
- IEC 61000-4-4 (EFT) 40A(5/50ns)
- IEC 61000-4-5 (Lightning) 3.5A (8/20μs)

Mechanical Data

- SOT-523 package
- Molding compound flammability rating: UL 94V-0
- Packaging: Tape and Reel
- RoHS/WEEE Compliant

Applications

- Dataline
- Automatic Teller Machines
- Net works
- Power line

Reference News

SOT-523	Marking
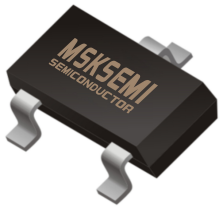	P5

Schematic & PIN Configuration

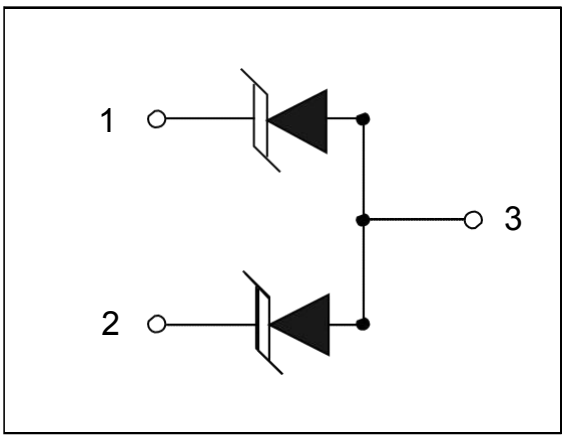

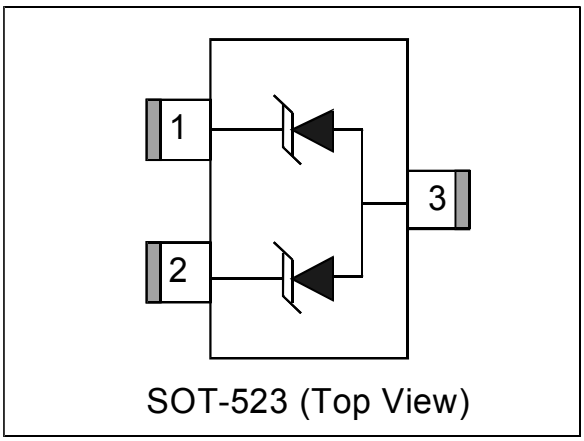

Copyright© Msksemi Incorporated

Absolute Maximum Rating

Rating	Symbol	Value	Units
Peak Pulse Power (t_p =8/20μs)	P_{PP}	45	Watts
Peak Pulse Current (t_p =8/20μs)(note1)	I_{pp}	3.5	A
ESD per IEC 61000-4-2(Air) ESD per IEC 61000-4-2 (Contact)	V_{ESD}	20 15	kV
Lead SolderingTemperature	T_L	260(10seconds)	℃
JunctionTemperature	T_J	-55 to + 125	℃
StorageTemperature	T_{stg}	-55 to + 125	℃

Electrical Characteristics

Parameter	Symbol	Conditions	Min	Typical	Max	Units
Reverse Stand-OffVoltage	V_{RWM}				5	V
Reverse BreakdownVoltage	V_{BR}	I_T=1mA	6			V
Reverse LeakageCurrent	I_R	V_{RWM}=5V,T=25℃			1	μA
Peak Pulse Current	I_{PP}	tp =8/20μs			3.5	A
Clamping Voltage	V_C	I_{PP}=3.5A,t_p=8/20μs			25	V
JunctionCapacitance	C_j	V_R = 0V, f =1MHz		0.7	0.8	pF

Electrical Parameters (TA = 25°C unless otherwisenoted)

Symbol	Parameter
I_{PP}	Maximum Reverse Peak Pulse Current
V_C	Clamping Voltage @ I_{PP}
V_{RWM}	Working Peak Reverse Voltage
I_R	Maximum Reverse Leakage Current @ V_{RWM}
V_{BR}	Breakdown Voltage @ I_T
I_T	Test Current

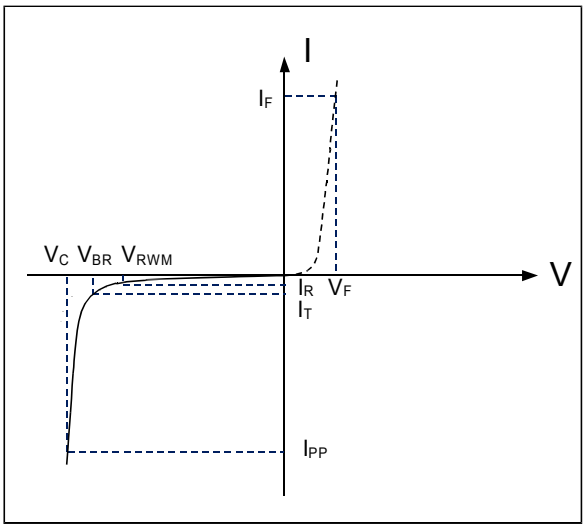

Note:. 8/20μs pulsewaveform.

Copyright© Msksemi Incorporated

TypicalCharacteristics

Figure 1: Peak Pulse Power vs. Pulse Time

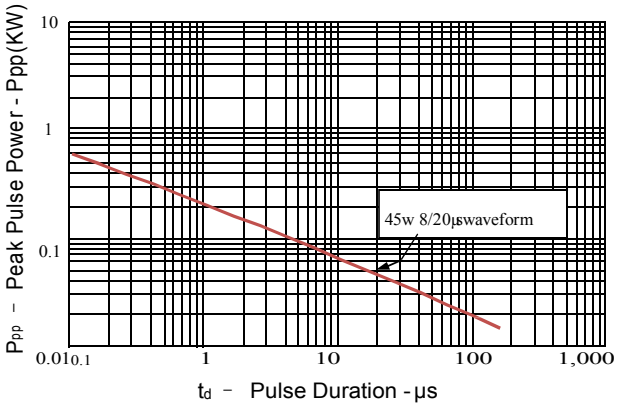

Figure 2: Power Derating Curve

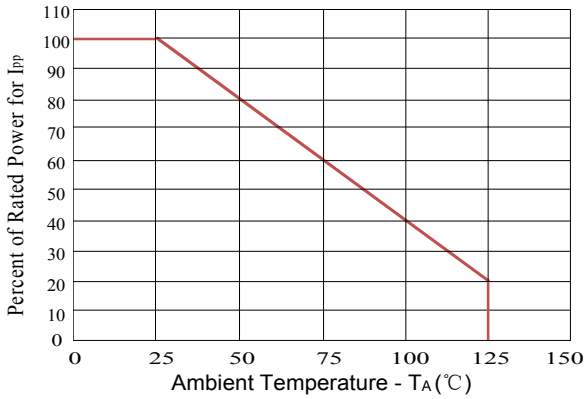

Figure3: Pulse Waveform

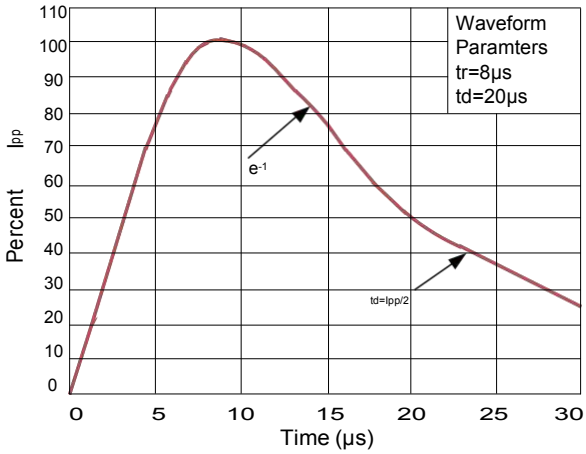

Figure 4: Clamping Voltage vs.Ipp

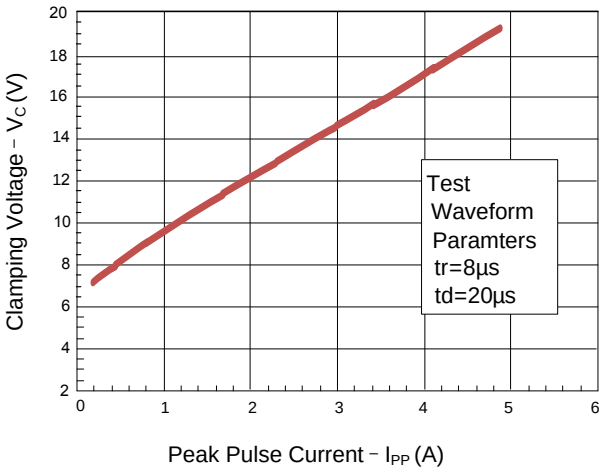

PACKAGEMECHANICALDATA

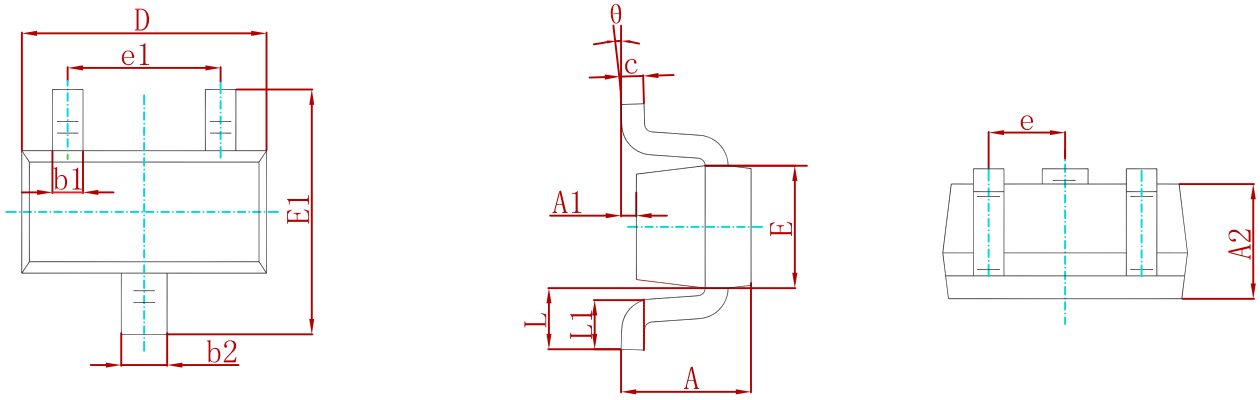

Symbol	Dimensions In Millimeters		Dimensions In Inches	
	Min.	Max.	Min.	Max.
A	0.700	0.900	0.028	0.035
A1	0.000	0.100	0.000	0.004
A2	0.700	0.800	0.028	0.031
b1	0.150	0.250	0.006	0.010
b2	0.250	0.350	0.010	0.014
c	0.100	0.200	0.004	0.008
D	1.500	1.700	0.059	0.067
E	0.700	0.900	0.028	0.035
E1	1.450	1.750	0.057	0.069
e	0.500 TYP.		0.020 TYP.	
e1	0.900	1.100	0.035	0.043
L	0.400 REF.		0.016 REF.	
L1	0.260	0.460	0.010	0.018
θ	0°	8°	0°	8°

Suggested Pad Layout

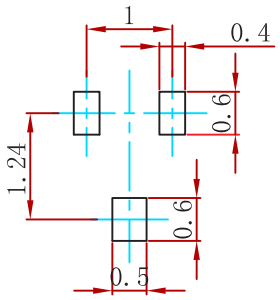

Note:
1.Controlling dimension:in millimeters.
2.General tolerance:±0.05mm.
3.The pad layout is for reference purposes only.

Order information

Orderable Device	Package	Packing Option
RCLAMP0502B-MS	SOT-523	3000PCS

Copyright© Msksemi Incorporated

Attention

■ Any and all MSKSEMI Semiconductor products described or contained herein do not have specifications that can handle applications that require extremely high levels of reliability, such as life-support systems, aircraft's control systems, or other applications whose failure can be reasonably expected to result in serious physical and/or material damage. Consult with your MSKSEMI Semiconductor representative nearest you before using any MSKSEMI Semiconductor products described or contained herein in such applications.

■ MSKSEMI Semiconductor assumes no responsibility for equipment failures that result from using products at values that exceed, even momentarily, rated values (such as maximum ratings, operating condition ranges, or other parameters) listed in products specificationsof any andall MSKSEMI Semiconductor products described orcontained herein.

■ Specifications of any and all MSKSEMI Semiconductor products described or contained herein stipulate the performance, characteristics, and functions of the described products in the independent state, and are not guarantees of the performance, characteristics, and functions of the described products as mounted in the customer's products or equipment. To verify symptoms and states that cannot be evaluated in an independent device, the customer should always evaluate and test devices mounted in the customer'sproducts orequipment.

■ MSKSEMI Semiconductor. strives to supply high-quality high-reliability products. However, any and all semiconductor products fail with someprobability. It is possiblethat these probabilistic failures could give rise to accidents or events that could endanger human lives, that could give rise to smoke or fire, or that could cause damage to other property. When designing equipment, adopt safety measures so that these kinds of accidents or events cannot occur. Such measures include but are not limited to protective circuits anderror prevention circuitsfor safedesign, redundant design, and structural design.

■ In the event that any or all MSKSEMI Semiconductor products(including technical data, services) described or contained herein are controlled under any of applicable local export control laws and regulations, such products must not be exported without obtaining the export license from theauthorities concerned in accordance with the above law.

■ No part of this publication may be reproduced or transmitted in any form or by any means, electronic or mechanical, including photocopying and recording, or any information storage or retrieval system, or otherwise, without the prior written permission of MSKSEMI Semiconductor.

■ Information (including circuit diagrams and circuit parameters) herein is for example only ; it is not guaranteed for volume production. MSKSEMI Semiconductor believes information herein is accurate and reliable, but no guarantees are made or implied regarding its use or any infringementsof intellectual property rights or other rightsof third parties.

■ Any and all information described or contained herein are subject to change without notice due to product/technology improvement, etc. Whendesigning equipment, referto the "Delivery Specification" for the MSKSEMI Semiconductor productthat you intend to use.

Copyright© Msksemi Incorporated