30.0A Schottky Barrier Rectifier

1 General Description

1.1 Features

- High frequency operation
- High purity, high temperature epoxy encapsulation for enhanced mechanical strength and moisture resistance
- Guard ring for enhanced ruggedness and long term reliability
- Solder dip 260 °C max. 8 s, per JESD 22-B106

REVERSE VOLTAGE
100-200V
FORWARD CURRENT
30Ampere

1.2 Typical Applications

- High frequency rectification
- Portable consumer electronics
- Reverse polarity protection
- Charger and adapter
- Converters



1.3 Mechanical Data

- Package: TO-220AB
- Molding compound meets UL 94 V-0 flammability rating, RoHS compliant
- Terminals: Tin plated leads, solderable per J-STD-002 and JESD22-B102
- Polarity: As marked

2 Maximum Ratings(TA=25℃ Unless otherwise specified)

PARAMETER	SYMBOL	MBR30100CT	MBR30150CT	MBR30200CT	UNIT
Maximum Repetitive Peak Reverse Voltage	V_{RRM}	100	150	200	V
Average rectified output current @60Hz sine wave, R-load, Ta=25℃	I_O	30			A
Surge(Non-repetitive)Forward Current @60Hz half sine-wave, 1 cycle, Ta=25℃	I_{FSM}	180			A
Current squared time @1ms≤t<8.3ms Tj=25℃	I^2t	134			A^2sec
Operating Temperature Range	T_J	-55 to +150			℃
Storage Temperature Range	T_{STG}	-55 to +150			℃
Thermal Resistance Between junction and case	$R_{\theta JC}$	2.0			℃/W

3 Electrical Characteristics(TA=25℃ Unless otherwise specified)

PARAMETER	SYMBOL	TEST CONDITION	MBR30100CT	MBR30150CT	MBR30200CT	UNIT
Maximum instantaneous Forward Voltage drop per diode	V_{FM}	I_{FM}=15.0A	0.87	0.93	0.95	V
Maximum DC Reverse Current at Rated DC Blocking Voltage	I_R	V_{RM}=V_{RRM} Tj =25℃	0.15	0.1		mA
		V_{RM}=V_{RRM} Tj =125℃	20			

4 Characteristics Curves(TA=25℃ Unless otherwise specified)

FIG1:Io -Tc Curve

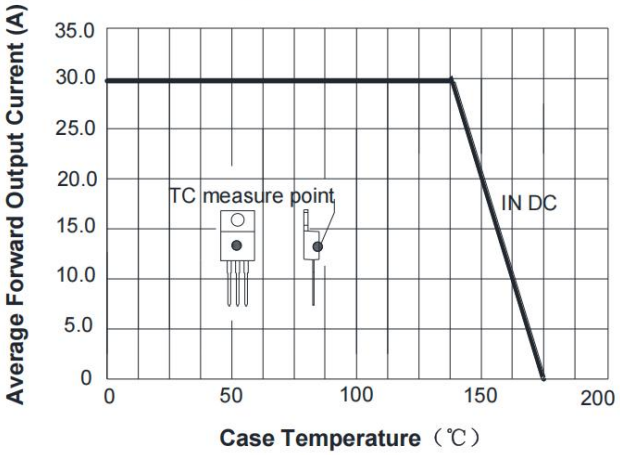

FIG2:Surge Forward Current Capability

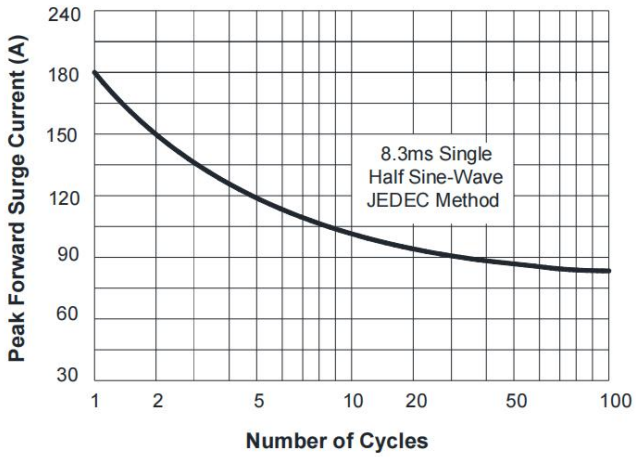

FIG3: Forward Voltage

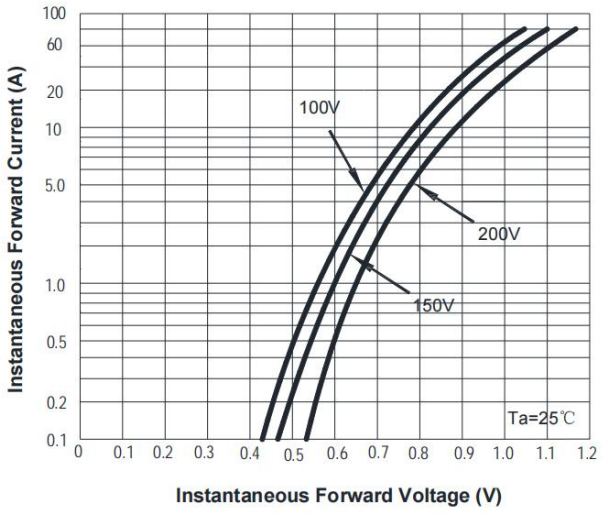

FIG.4: Instantaneous Reverse Characteristics

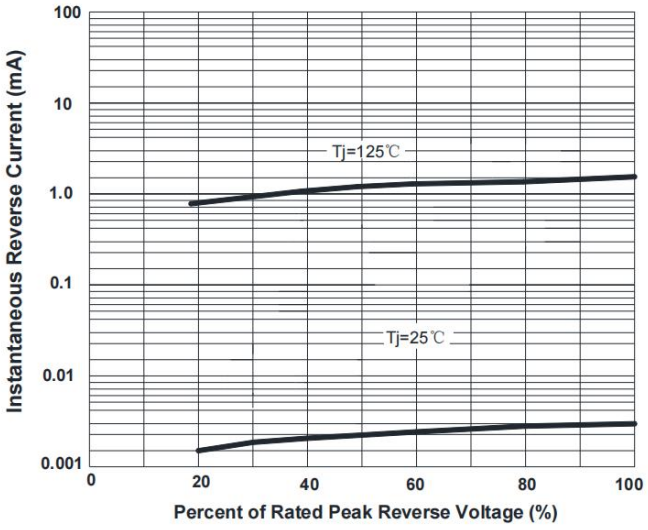

5 Package Outline Dimensions

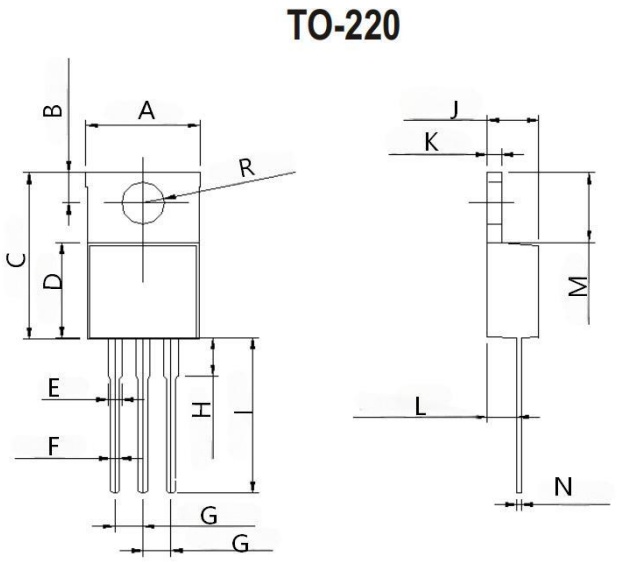

Symbol	UNIT(mm)	
	Min	Max
A	9.50	10.50
B	2.45	3.05
C	14.50	15.50
D	8.40	9.00
E	1.27 TYP	
F	0.70	0.90
G	2.44	2.64
H	3.00	4.00
I	13.50	14.50
J	4.40	4.80
K	1.17	1.37
L	2.45	2.85
M	6.10	6.50
N	0.30	0.50
R	3.60	4.00

6 Ordering Information

PACKAGE	UNIT WEIGHT (g)	PACKAGING	TUBE (pcs)
TO-220	Consult	Tube	50

Disclaimer

1. All information contained in this document is for reference only. Shandong Baocheng Electronics Co.,Ltd reserves the right to revise this document, product specifications and related data at any time without prior notice. Customers shall obtain and confirm the latest product documents and specifications before purchasing or using the products.

2. Under no circumstances shall the Company be liable for any failure or damage caused by the operation of semiconductor devices beyond the maximum rated values.

3. Shandong Baocheng Electronics Co.,Ltd does not warrant the suitability of its products for any specific application and assumes no responsibility for customer's complete machine design or application debugging. Without written approval, products are prohibited from being used as key components of life support equipment. The Company shall not be liable for any consequences arising from unauthorized use.

4. No intellectual property license of Shandong Baocheng Electronics Co.,Ltd is granted, explicitly or implicitly, through this document.