© 2019 TE Connectivity. All Rights Reserved.

| PROJECT NO: | PRJ-19-000902256 |
|---|---|
| MATED WITH: | 1670904 |

REVISIONS

| P | LTR | DESCRIPTION | DATE | DWN | APVD |
|---|---|---|---|---|---|
| | A2 | DRAWING CLARIFICATION | 17DEC2009 | WMA | MEC |
| | A3 | NEW PART VARIANT ADDED IN BOM | 30JUL2019 | JJH | TS |
| | A4 | -3 VARIANT OBSOLETED | 10APR2020 | SK | TS |
| | A5 | ADDED -4 VARIANT FOR 95mmsq COROPLAST CABLE | 25AUG2022 | JJH | PR |

## Variant I

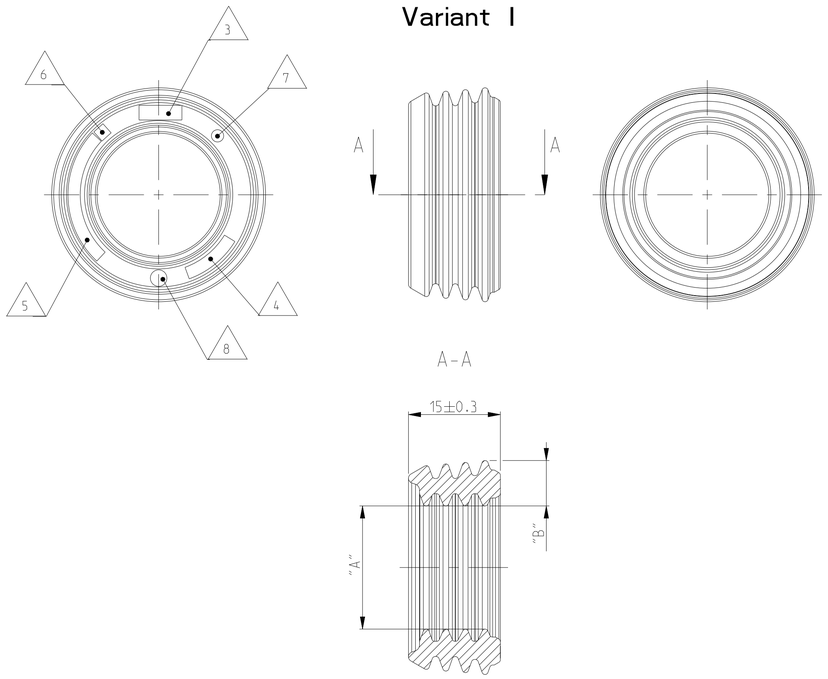


-1 VAR I AS SHOWN

## Variante II

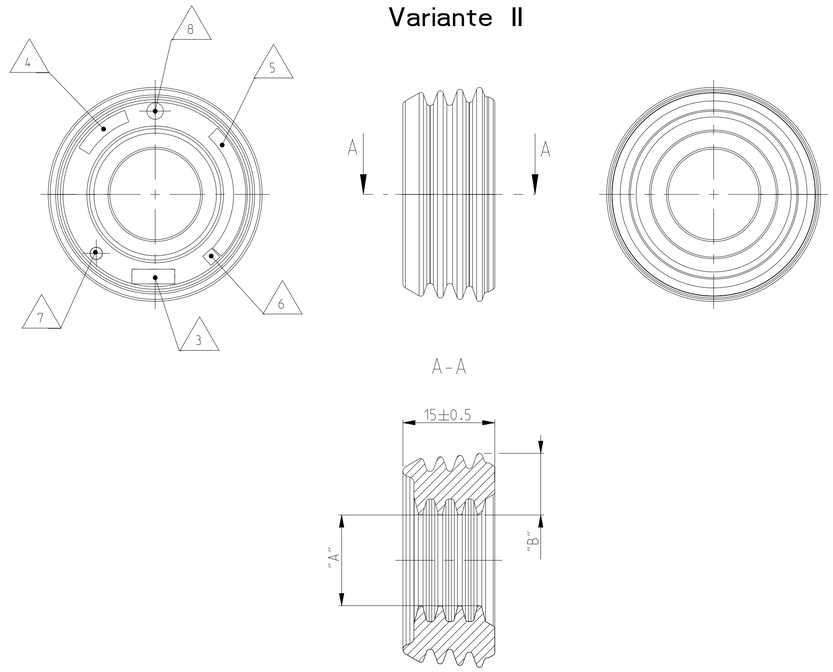


-2 VAR II AS SHOWN

## Variante III

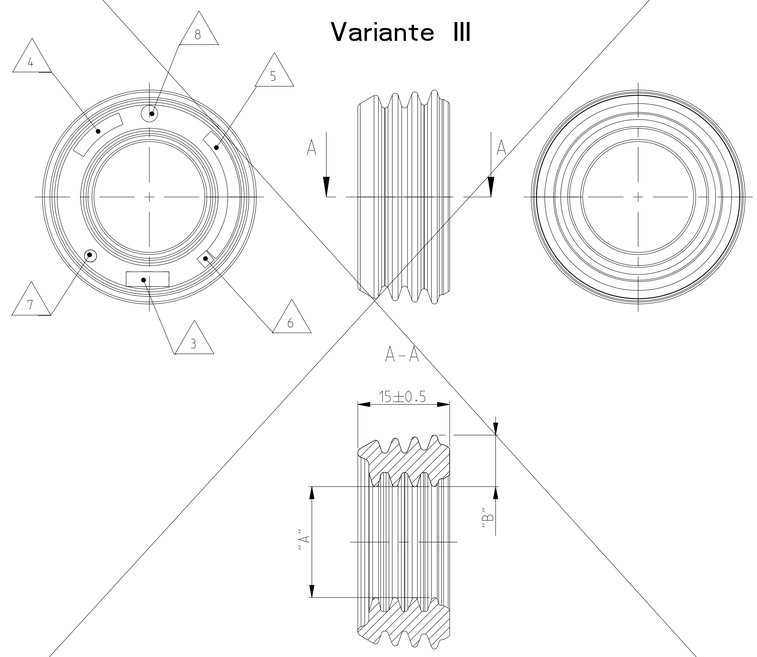


-3 VAR III AS SHOWN

1 ONLY THE ENGLISH LANGUAGE VERSION IS AUTHORITATIVE

2 SUPPLIED FORM: LOOSE PIECE PACKED INTO AIR TIGHT POLYETHYLENE PACKET

3 SUPPLIER MARK

4 MATERIAL IDENTIFICATION

5 TE Connectivity PART NO.: SEE TABLE

6 ACTUAL REVISION: EXCHANGEABLE FOR LETTERS ONLY

7 NEST IDENTIFICATION

8 DATE CODE

| NOTE | FEATURE | TE Connectivity - No. |
|---|---|---|
| 9 | USE ON 1POS. TERMINAL SCREWED, ASSY<br>SEE OVERVIEW DRAWING - IPT 70 - 120mm² | 1670904 |
| 10 | PRODUCT-SPEC. | 108-94026 |
| 11 | APPLICATION-SPEC. | 114-18769 |

## Variante IV

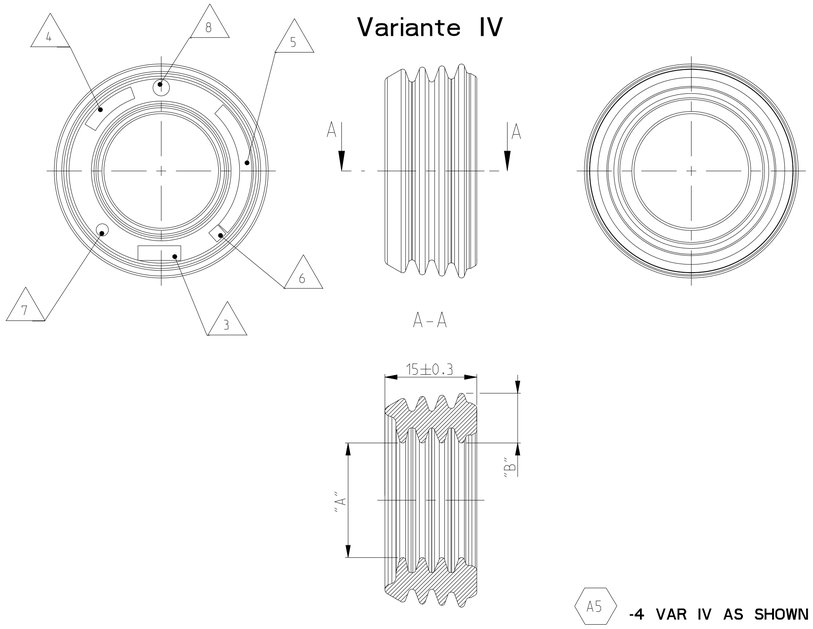


A5 -4 VAR IV AS SHOWN

3D VIEWS
1:1

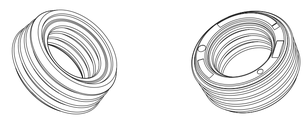

| TITLE | MASS [gr] | TE CONNECTIVITY ORDER-NO. | REV | VAR | MATERIAL | SURFACE COLOUR | FOR WIRE SIZE [mm²] | WIRE DIAMETER [mm] 11 | DIM "A" [mm] | DIM "B" [mm] | |
|---|---|---|---|---|---|---|---|---|---|---|---|
| SINGLE WIRE SEAL, PLUG TERM | 8.2 | 1670820-4 | A | IV | SILICONE | RED/Rot RAL 3020 | 95 COROPLAST | Ø20.9+0/-0.8 | Ø18.7±0.3 | 8.1±0.3 | A5 |
| SINGLE WIRE SEAL, PLUG TERM | 7.27 | 1670820-3 | A | III | SILICONE | BLUE/blau RAL 5015 | 95 (H+S) | Ø19.9±0.4 | Ø18.1±0.3 | 8.4±0.3 | |
| SINGLE WIRE SEAL, PLUG TERM | 8.8 | 1670820-2 | A | II | SILICONE | GREEN/gruen SIM./aehnl. RAL 6010 | 70 | Ø17.6±0.4 | Ø14.8±0.4 | 10.1±0.3 | |
| SINGLE WIRE SEAL, PLUG TERM | 6.8 | 1670820-1 | A | I | SILICONE | NATURAL natur | 95 / 120 | Ø21.5±0.5 | Ø20.1±0.3 | 7.4±0.3 | |

THIS DRAWING IS A CONTROLLED DOCUMENT. DIMENSIONING AND TOLERANCING PER GPS (ISO STANDARDS)

DIMENSIONS: mm

TOLERANCES UNLESS OTHERWISE SPECIFIED: 0 PLC ±; 1 PLC ±; 2 PLC ±; 3 PLC ±; 4 PLC ±; ANGLES ±2°; ACC. TO DIN ISO 3302

MATERIAL: SEE TABLE Siehe Tabelle

FINISH: SEE TABLE Siehe Tabelle

| | | |
|---|---|---|
| DWN | W.MAIER | 08APR2008 |
| CHK | M.ECKEL | 08APR2008 |
| APVD | J.WOLLER | 08APR2008 |
| PRODUCT SPEC | 10 | |
| APPLICATION SPEC | 11 | |
| WEIGHT | SEE TABLE | |

TE Connectivity

NAME: SINGLE WIRE SEAL, PLUG TERM
Einzelleitungsdichtung, Stecker-Einheit

| SIZE | CAGE CODE | DRAWING NO | RESTRICTED TO |
|---|---|---|---|
| A1 | 00779 | C-1670820 | |

CUSTOMER DRAWING

| SCALE | SHEET | OF | REV |
|---|---|---|---|
| 2:1 | 1 | 1 | A5 |

4805 (3/13)