DWG NO.	DO NOT SCALE	METRIC	3rd ANGLE PROJECTION
	DIMENSIONS IN mm.		

REQ. PER ASSY	ITEM	DESCRIPTION	MATERIAL	FINISH

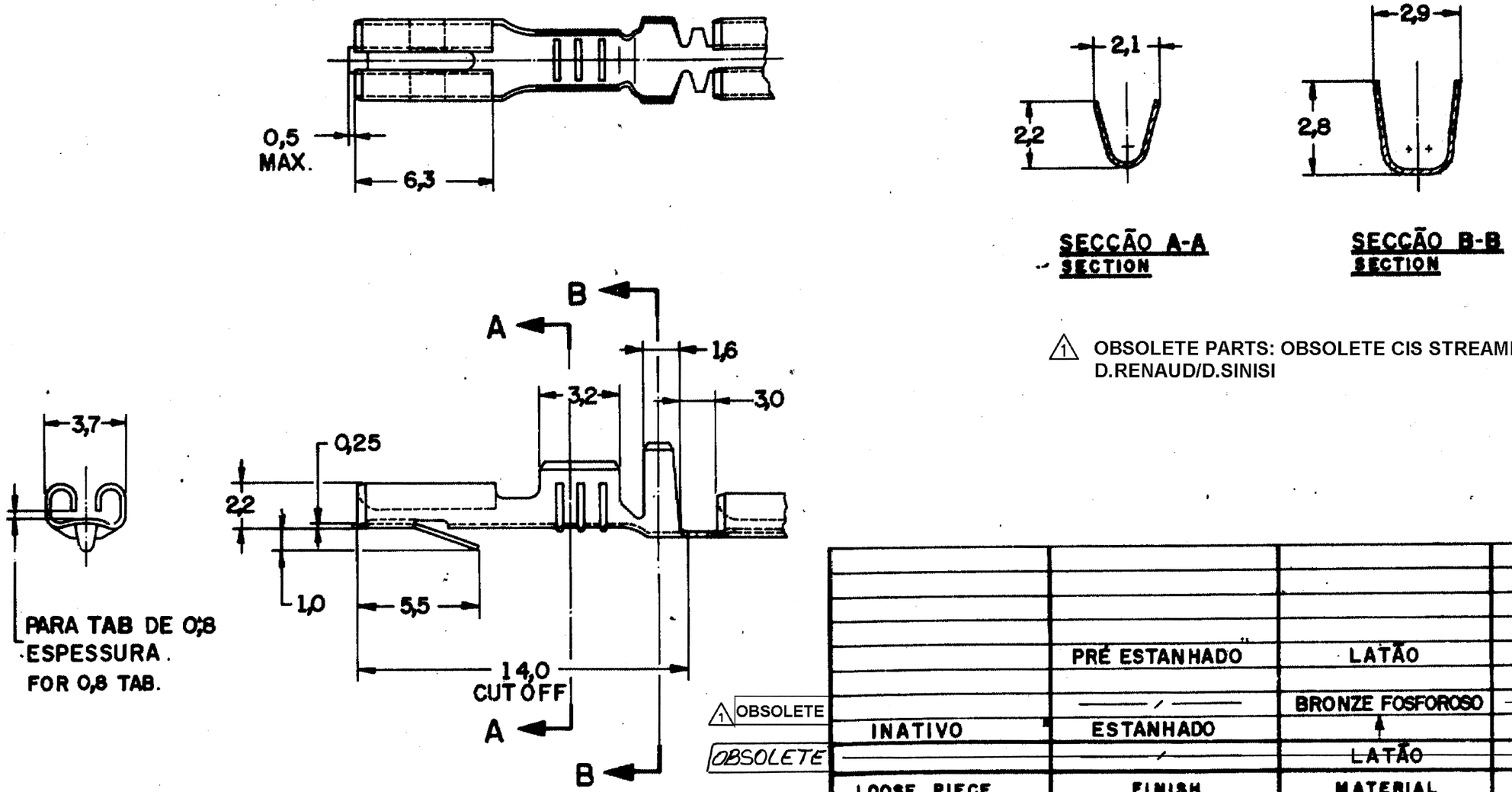

△1 OBSOLETE PARTS: OBSOLETE CIS STREAMLINING PER D.RENAUD/D.SINISI

	LOOSE PIECE	FINISH	MATERIAL	PART NUMBER
		PRÉ ESTANHADO	LATÃO	881504 - 5
△1 OBSOLETE		—/—	BRONZE FOSFOROSO	-3
	INATIVO	ESTANHADO	↑	-2
OBSOLETE		—/—	LATÃO	881504 -1

CUSTOMER DWG
for REFERENCE ONLY

THIS DRAWING IS REPUBLISHED & RELEASED FOR PUBLICATION ... BY AMP DO BRASIL LTDA S.P. ALL INTERNATIONAL RIGHTS ... AMP PRODUCTS ... BY U.S. AND FOREIGN PATENTS AND/OR PATENTS PENDING.

TOLERANCES UNLESS OTHERWISE STATED
DEC. ± 0,5
ANGLES ± 1°

INS. DIA. RANGE 1,27 - 2,03 mm | WIRE RANGE 0,30 - 0,56 mm² | SCALE —/—

DR. N.C. LAPRESA 02 - JUL. - 93

CHK. J.R. 20-JUL-93

DE. H.B. 22-JUL-93

APP.

AMP do BRASIL LTDA.
São Paulo, Brasil

DESCRIPTION .110 SERIES RECEPTACLE FASTIN - FASTON

REV	REVISION RECORD	ECN	DR/CHK	DATE
C2	REV. ECO 17-013915		HC	21SEP17
C1	REVISED PER ECO-09-026444		KK/AEG	28NOV09
C	REDRAWN WITH CHANGE			

A3 | DWG NO. C 881504 | SHEET 1 OF 1